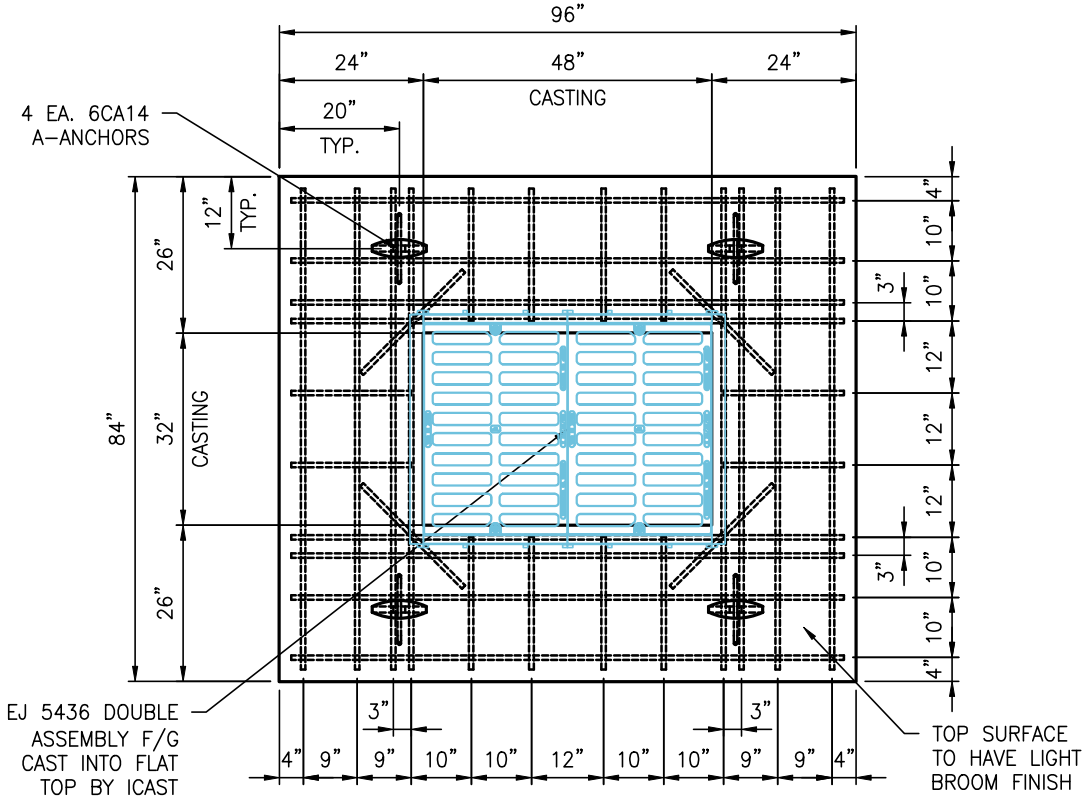

TOP VIEW

NOTES:

1. PER ASTM C913 SPECIFICATIONS.
2. CONCRETE = 4,000 PSI AT 28 DAYS.
3. REINFORCEMENT PER ASTM A615 (GRADE 60)
   #6 BAR AT 12" C.C.E.W. (2" MIN. CLEARANCE (TYP)).
4. WEIGHT:
   TOP.....6,573 LBS.
5. CASTING - EJ 5436 DOUBLE ASSEMBLY CAST INTO FLAT TOP BY ICAST.
6. VERIFY ALL DIMENSIONS & ANY REQUIRED OPENING SIZES & LOCATIONS BEFORE MANUFACTURE.

FOR ALL 60X72 TYPE 2 STRUCTURES
(A1, A2, A3, B1, B4, C1, D1, J4, K1, L1)

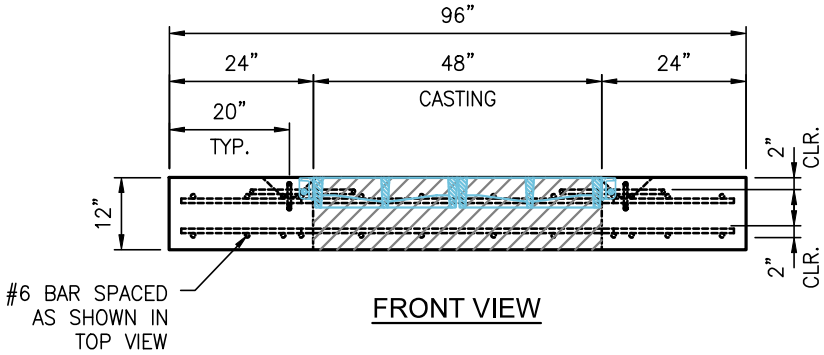

FRONT VIEW

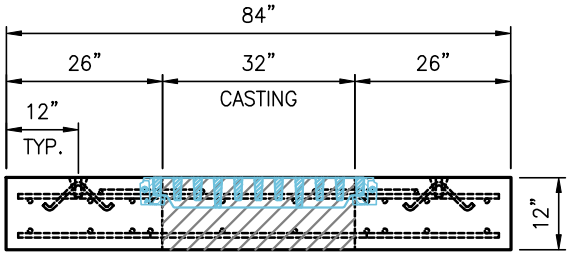

SIDE VIEW

REVISION INFORMATION	
REV. 0 DATE: 00/00/00	NO REVISIONS TO DATE

SUBMITTAL DRAWING: 84"x96"x12"H FLAT TOP w/ EJ 5436 DBL.		
CUSTOMER: JIM SMITH CONTRACTING CO, LLC		
PROJECT: BARKLEY REGIONAL AIRPORT RUNWAY 5-23		
STRUCTURE: TOP SLAB DETAIL - INLET TY 2 - 60"x72"		
SALES ORDER NO: 24-2677		
PC: J. JARVIS	DRAWN BY: M. BILITER	
DATE: 02/19/25	SCALE: NTS	PG. 1 of 1

THIS DRAWING IS THE PROPERTY OF INFRASTRUCTURE PRECAST, INC. ANY USE OR DUPLICATION OF THIS DRAWING WITHOUT PRIOR AUTHORIZATION IS STRICTLY PROHIBITED.