Job Name: 24-1164 Paddy's Run Flood PS
Job Location: Louisville, Ky.
Contractor: Core & Main LP (Lou)

PC:
TECH: S. Felletter
Plant: Beaver Dam, Ky.

Structure ID: **Storm MH**

Spec: Storm-Pipe Centered	Rim: 1'	Sump: 0"	Floor (Bot): 0'
Type: STM.MH	Invert: 1'	Floor (Top): 0'	Overall Height: 1'
Size: 48"	Rim to Invert: 0'	Floor Height: 0"	Slack: 0"

Structure Notes: 1. PER ASTM C478 SPECIFICATIONS.
2. CONCRETE = 4,000 PSI AT 28 DAYS.
3. NO INVERT CHANNEL.
4. CASTING BY ICAST (HOE MCS-288). CAST-IN.
REINFORCING PER ASTM A615 (GRADE 60).
- TOP SLAB (As .62) #5 BARS AT 6" C.C.E.W.

STRUCTURE SUMMARY:

P1) 48" - MH FLAT TOP SPECIAL (MCS-288) F/G - 12"	1593 lb
1) CASTING - HOE MCS-288 Cover Storm	125 lb
1) CASTING - HOE MCS-288 Frame	123 lb
1) This Structure Includes a Cast-in Item	0 lb
Structure Total:	1841 lb

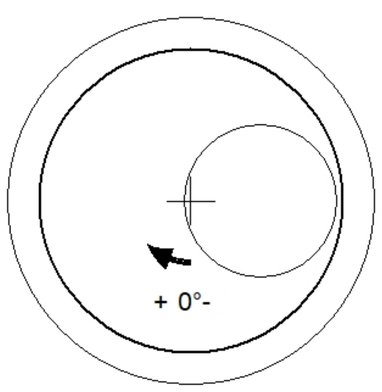

Position	Elev	Angle	Pipe	Pipe OD	Hole	Connector	Up (_)	Ref
Rim	1'							
Reducer								
Invert 1								
Invert 2								
Invert 3								
Invert 4								
Invert 5								
Invert 6								
Invert 7								
Invert 8								

Default - Interior Dimensions

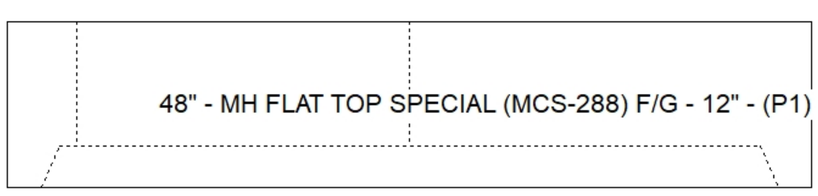

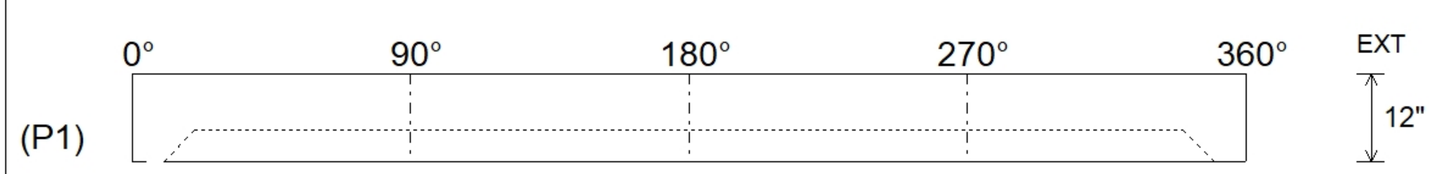

Submittal Drawing
5/19/2026 8:36:51 AM

SUBMITTAL
APPROVED BY: