Job Name: 25-3187 - Carter Caves WTP Upgrades Ph 3 Job Location: Olive Hill, KY Contractor: Walker Principles	Plant: 100 7/6/2026 11:03:58 AM	Tech: J. Horsley PC: E. Bradley	

Structure ID: SCUM WW

P4 MH060LD13S MH FLAT TOP w/30"x30" Hatch

P4) 60" - MH FLAT TOP w/30"x30" Hatch - 13"	2455 lb
P3) 60" - MH RISER SPECIAL - 18"	1879 lb
P2) 60" - MH RISER SPECIAL - 72"	7442 lb
P1) 60" - MH BASE w/FLANGE (08F/07EF) - 43"	8388 lb
3) JOINT WRAP - 12" WD x 096" MAC WRAP	0 lb
1) HATCH (Alum.) - HALLIDAY W1S 30"x30"	62 lb
1) SECONDARY POUR - EXT. FLANGE	0 lb
3) 60" - Conseal CS-231 1.00" (Double)	0 lb
1) Z-Lok - C107-3	1 lb
2) A-Lok - 0225	2 lb
1) A-Lok - 0150	1 lb
Structure Total:	20230 lb

Structure Notes: .
1. PER ASTM C478 SPECIFICATIONS.
2. CONCRETE = 4,500 PSI AT 28 DAYS.
3. NO STEPS / NO INVERT CHANNEL.
4. HATCH BY ICAST (HALLIDAY W1S 30"X30")
.
REINFORCING PER ASTM A615 (GRADE 60).
- TOP SLAB (As .62) #5 BARS AT 6" C.C.E.W.
- RISER/WALLS (As .18)
- FLOOR (As .47) #5 BARS AT 8" C.C.E.W.

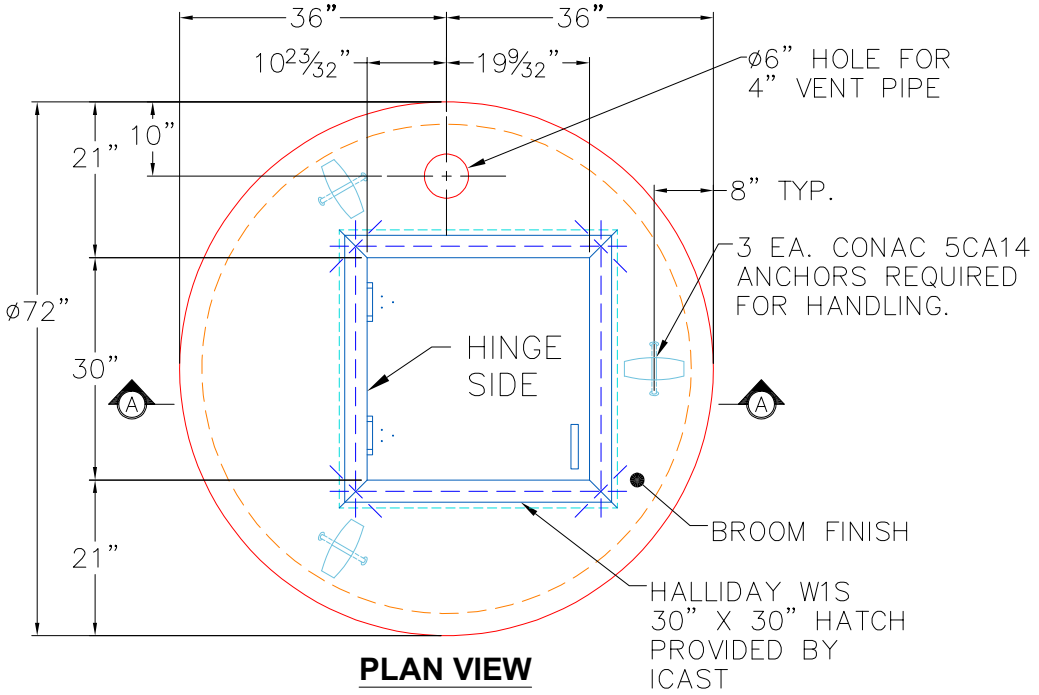

PLAN VIEW

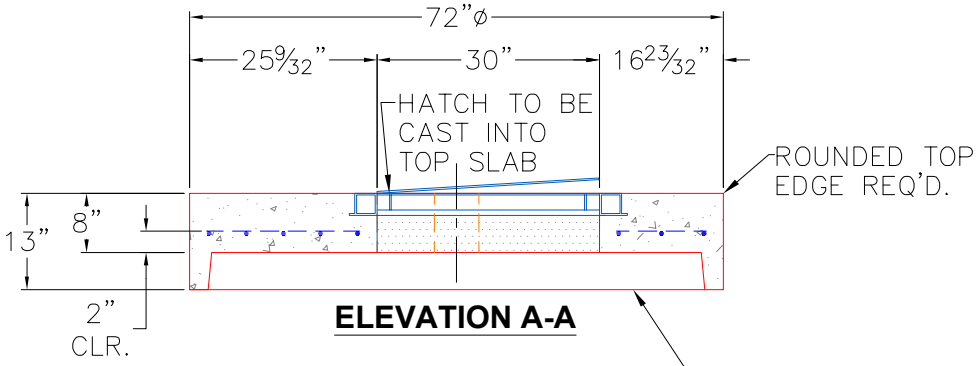

ELEVATION A-A

NOTES:
1. MANUFACTURED TO ASTM C-478 (LATEST REVISION).
2. CONCRETE: 4,500 PSI AT 28 DAYS.
3. REINFORCING: #5 @ 6" O.C. E.W. (GRADE 60)
4. WEIGHT: 2,455 LBS.
5. HATCH: HALLIDAY W1S 30" X 30" PROVIDED BY ICAST.
6. HATCH TO BE CAST INTO TOP OF LID.

Coating (Int): Coating (Ext):	Seam Up: Flat Seam Dn: Groove	Wall Thickness: 6"	Height (Ext): 13"	Weight (Net): 2455 lb Volume (Net): 0.63cu.yd