Job Name: 26-2329 TDOT Type U Endwall Rinker
Job Location: CPU
Contractor: Rinker Underground

Plant: Beaver Dam
5/27/2026 11:28:02 AM

Tech: S. Felletter
PC: T. Ryan

Structure ID: QL3 HW (3)

P1 HWTDOT3-1TU36 36" - HW TDOT 3:1 Type U Cross Drain Endwall F/F

Customer: Rinker Underground
Project: TDOT EW's
TDOT PIN#: 207036.00
State Project#: 79LPLM-F3-034

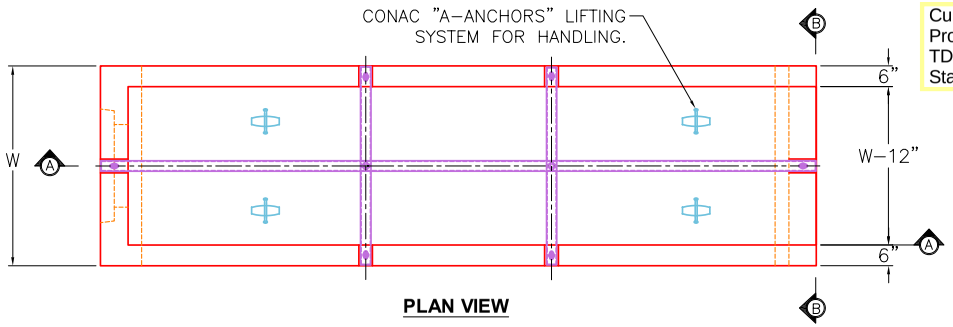

PLAN VIEW

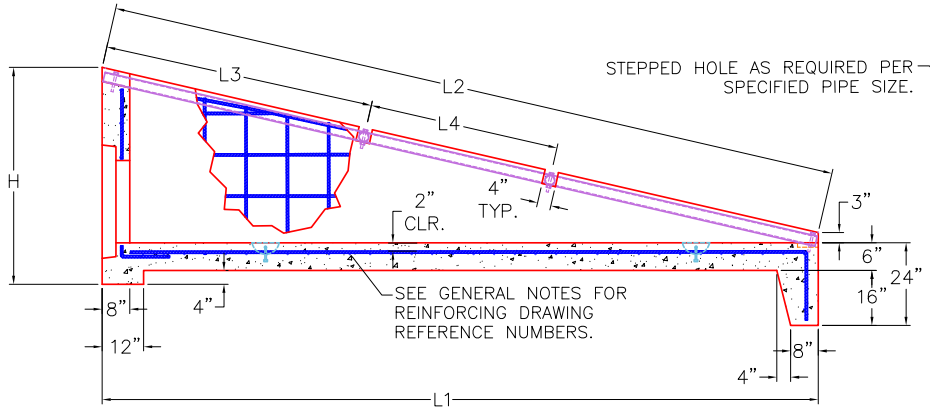

SECTION A-A

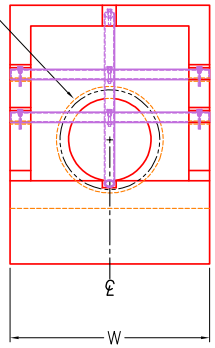

ELEVATION B-B

GENERAL NOTES

1. DRAWING TO BE USED FOR ALL 12" THROUGH 48" SIDE DRAIN CONCRETE ENDWALLS. MANUFACTURING, FOR CROSS DRAINS ONLY.
2. CONCRETE: Fc' = 4,500 PSI @ 28 DAYS.
3. REINFORCING STEEL: ASTM A615, Fy=60,000 PSI. SEE STD. DWGS. D-PE-15A, D-PE-18, D-PE-24A, D-PE-30A, D-PE-36A, D-PE-42A & D-PE-48A FOR BILL OF STEEL.
4. SPLICING OF REINFORMENT IS ACCEPTABLE PROVIDED THAT A MINIMUM 21" SPLICE LENGTH IS USED.
5. APPROPRIATE SIZING AND LOCATIONS OF THE LIFTING INSERTS WILL BE THE RESPONSIBILITY OF INFRASTRUCTURE PRECAST, INC.
6. LIFTING INSERT POCKETS SHALL BE GROUTED ON SITE BY THE CONTRACTOR AFTER THE ENDWALL IS SET AS PER TDOT REQUIREMENTS.
7. DIMENSIONAL AND REINFORCING TOLERANCES WILL BE AS SHOWN IN STANDARD OPERATING PROCEDURE (SOP) 5-3.
8. PIPE OPENINGS FOR HEADWALLS ARE BASED ON REINFORCED CONCRETE PIPE WITH TYPE "B" WALL AS PER AMERICAN CONCRETE PIPE ASSOCIATION (ACPA). OUTSIDE DIAMETER + 3"-4".
9. TOE WALL BACK SLOPE MAY BE CONSTRUCTED VARIABLE FROM VERTICAL UP TO 15°.

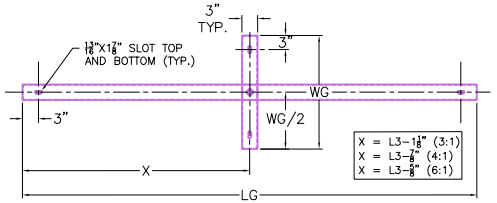

-30"ø & 36"ø PIPE (3:1, 4:1 & 6:1 SLOPES)
-42"ø & 48" PIPE (3:1 & 4:1 SLOPES)

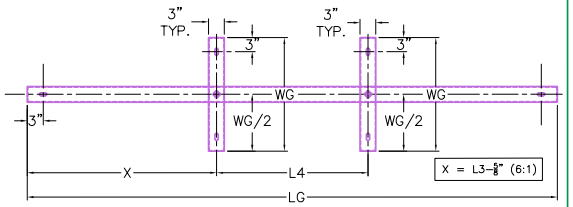

-42"ø & 48" PIPE (6:1 SLOPE)

STEEL PIPE GRATE PLAN VIEWS
(SEE D-PE-99 FOR MOUNTING STEEL GRATES)

*Pipe grates supplied by others

DIMENSIONS & QUANTITIES FOR ONE ENDWALL 3:1

PIPE DIA. (D)	CONCRETE ENDWALL DIMENSIONS				GRATE DISPLACEMENT DIMENSIONS		STRUCT. STEEL	WEIGHT
	H	W	L1	L2	L3	L4	LBS.	LBS.
15"	2'-11"	2'-8"	6'-0"	6'-3 7/8"	N/A	N/A	N/A	2,819
18"	3'-2"	2'-11"	6'-8"	7'-0 3/8"	N/A	N/A	N/A	3,406
24"	3'-9"	3'-6"	8'-5"	8'-10 1/2"	N/A	N/A	N/A	5,011
30"	4'-5"	4'-1"	10'-5"	10'-11 1/4"	5'-2"	N/A	114	7,204
36"	5'-0"	4'-8"	12'-2"	12'-9 7/8"	6'-4 3/4"	N/A	132	9,513
42"	5'-6"	5'-3"	13'-8"	14'-4 7/8"	7'-4 1/2"	N/A	148	11,862
48"	6'-1"	5'-10"	15'-5"	16'-3"	7'-4 7/8"	N/A	167	14,838

DIMENSIONS & QUANTITIES FOR ONE ENDWALL 4:1

PIPE DIA. (D)	CONCRETE ENDWALL DIMENSIONS				GRATE DISPLACEMENT DIMENSIONS		STRUCT. STEEL	WEIGHT
	H	W	L1	L2	L3	L4	LBS.	LBS.
15"	2'-11"	2'-8"	8'-0"	8'-3"	N/A	N/A	N/A	3,484
18"	3'-2"	2'-11"	8'-8"	8'-11 1/4"	N/A	N/A	N/A	4,228
24"	3'-9"	3'-6"	11'-0"	11'-4"	N/A	N/A	N/A	6,303
30"	4'-5"	4'-1"	13'-8"	14'-1"	6'-1"	N/A	137	9,083
36"	5'-0"	4'-8"	16'-0"	16'-5 3/8"	8'-2 1/2"	N/A	160	12,058
42"	5'-6"	5'-3"	18'-0"	18'-6 5/8"	9'-2 7/8"	N/A	180	15,073
48"	6'-1"	5'-10"	20'-4"	20'-11 1/2"	10'-3 1/4"	N/A	203	18,910

DIMENSIONS & QUANTITIES FOR ONE ENDWALL 6:1

PIPE DIA. (D)	CONCRETE ENDWALL DIMENSIONS				GRATE DISPLACEMENT DIMENSIONS		STRUCT. STEEL	WEIGHT
	H	W	L1	L2	L3	L4	LBS.	LBS.
15"	2'-11"	2'-8"	11'-2"	11'-3 7/8"	N/A	N/A	N/A	4,737
18"	3'-2"	2'-11"	12'-8"	12'-10 1/8"	N/A	N/A	N/A	5,833
24"	3'-9"	3'-6"	16'-2"	16'-4 5/8"	N/A	N/A	N/A	8,848
30"	4'-5"	4'-1"	20'-2"	20'-5 3/8"	10'-1"	N/A	186	12,880
36"	5'-0"	4'-8"	23'-8"	23'-11 7/8"	12'-0 1/4"	N/A	217	17,186
42"	5'-6"	5'-3"	26'-8"	27'-0 3/8"	9'-1"	9'-1"	284	21,532
48"	6'-1"	5'-10"	30'-2"	30'-7"	10'-0 3/4"	10'-0 1/8"	320	27,092

STEEL PIPE GRATE DIMENSIONS

PIPE DIA.	ALL SLOPES	3:1	4:1	6:1
	WG	LG	LG	LG
30"	4'-1"	10'-10 5/8"	14'-0 1/8"	20'-4 1/2"
36"	4'-8"	12'-8 3/4"	16'-5"	23'-11 3/8"
42"	5'-3"	14'-3 1/4"	18'-5 1/2"	26'-11 7/8"
48"	5'-10"	16'-1 7/8"	20'-10 5/8"	30'-6 3/8"

INFRASTRUCTURE PRECAST, INC.
981 WEST 7TH ST., BEAVER DAM, KY. 42320
PHONE: (270) 363-2238, FAX: (270) 298-7424

TDOT TYPE "U" CROSS DRAIN ENDWALL WITH STEEL PIPE GRATE FOR 15" THROUGH 48" PIPES

DRAWING NO.: ET-TDOT-202	DATE: 11-24-25
REVIEWED BY: J.H. ROSS, PE	DRAWN BY: N. RICHARDS
WEB: WWW.ICASTINC.COM	SCALE: NTS

THIS DRAWING IS THE PROPERTY OF INFRASTRUCTURE PRECAST, INC. ANY USE OR DUPLICATION OF THIS DRAWING WITHOUT PRIOR AUTHORIZATION IS STRICTLY PROHIBITED.