Job Name: 25-2471 - Texas Roadhouse Job Location: Danville, KY Contractor: McCain Bros Excavating LLC	Plant: 100 6/12/2026 3:42:05 PM	Tech: Jared - F PC: M. Sullivan	

Structure ID: 8

P1 MH084BA78 MH BASE T/n

P4) 24" - CASTING HEIGHT - 7"	0 lb
P3) 48" - ECC CONE w/ 24" HOLE F/G - 42"	3200 lb
P2) 84" - MH Trans. Slab - 48" Hole ECC T/G - 17"	5869 lb
P1) 84" - MH BASE T/n - 78"	18528 lb
1) 84" - Conseal CS-102 1.00"	0 lb
1) 48" - Conseal CS-102 1.00"	0 lb
1) 24" - Conseal CS-102 1.00"	0 lb
2) Hole - 38	0 lb
1) Hole - 24	0 lb
12) MH Step ML-10-TDS-NCR - 10"	0 lb
Structure Total:	27596 lb

Structure Notes: .
1. PER ASTM C478 SPECIFICATIONS.
2. CONCRETE = 4,000 PSI AT 28 DAYS.
3. NO INVERT CHANNEL.
4. (7" TALL CASTING BY OTHERS)
.
REINFORCING PER ASTM A615 (GRADE 60).
- CONE (As .12)
- TRANS. SLAB (As .62) #5 BARS AT 6" C.C.E.W..
- RISER/WALLS (As .24)
- FLOOR (As .47) #5 BARS AT 8" C.C.E.W.

Rim: 1037' Rim to Invert: 12.03' Slack: 0.36" Sump: 0" Step Position: 268°

Position	Elev	Angle	Ext. (cw)	Pipe	Pipe OD	Connector	Hole	Horz Size	Up (_)	Offset
Invert 1	1024.97'	0°	0"	30" HDPE	35.1"	Hole 38	38"	39.432"	-2.5"	0"
Invert 2	1024.97'	125°	109.125"	18" HDPE	21.2"	Hole 24	24"	24.339"	-1.625"	0"
Invert 3	1024.97'	176°	153.625"	30" HDPE	35.1"	Hole 38	38"	39.432"	-2.5"	0"
Invert 4										
Invert 5										
Invert 6										
Invert 7										
Invert 8										

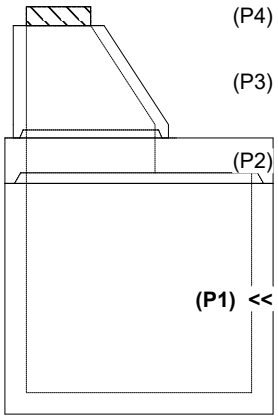

RIGHT-SIDE UP VIEW (int. dimensions)

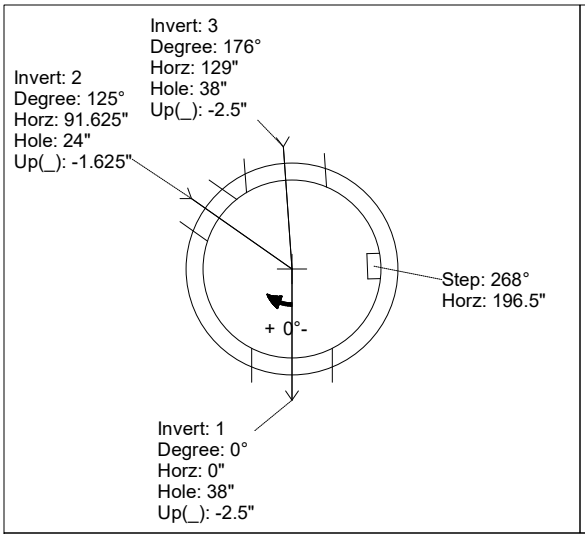

UPSIDE-DOWN VIEW (int. dimenions)

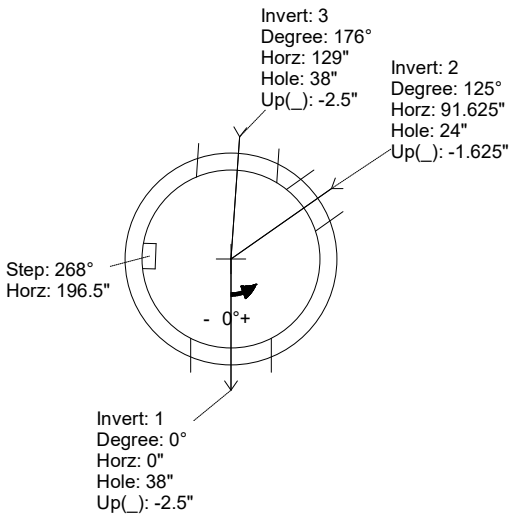

INSIDE WALL DIMENSIONS

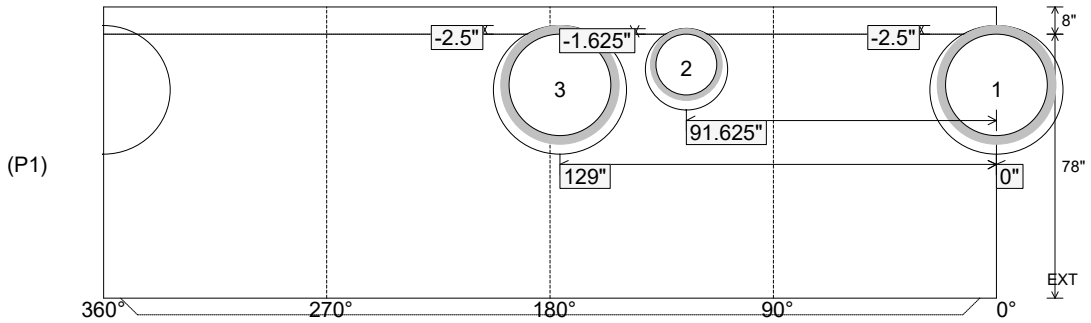

Coating (Int): Coating (Ext):	Seam Up: Tongue Seam Dn: n/a	Wall Thickness: 8" Floor Height: 8"	Height (Int): 78" Height (Ext): 86"	Weight (Net): 18528 lb Volume (Net): 4.73cu.yd