Job Name: 25-3195 - The Banks Lift Station and Forcemain Job Location: Gallatin, TN Contractor: W&O Construction	Plant: 100 5/28/2026 6:53:07 PM	Tech: Jared - F PC: A. Chambers	

Structure ID: WET WELL

P1 MH120SB12CDARED MH SEPARATE BASE-T EXT. 14" (170" OD) w/CONBLOCK CDA RE

P7) 48" x 48" - HATCH (CAST FLUSH) - 3.75"	100 lb
P6) 120" - MH FLAT TOP w/48"x48" Hatch w/ConBlock-CDA Red F/G - 18"	14814 lb
P5) 120" - MH RISER w/CONBLOCK CDA RED T/G - 96"	36124 lb
P4) 120" - MH RISER Custom Ht w/CONBLOCK CDA RED T/G - 86"	32669 lb
P3) 120" - MH RISER Custom Ht w/CONBLOCK CDA RED T/G - 86"	32669 lb
P2) 120" - MH RISER Custom Ht w/CONBLOCK CDA RED T/G - 86"	32669 lb
P1) 120" - MH SEPARATE BASE-T EXT. 14" (170" OD) w/CONBLOCK CDA RED T/n - 12"	29640 lb
1) JOINT WRAP - 12" WD x 120" MAC WRAP	0 lb
1) ADMIXTURE CONBLOCK CDA RED	0 lb
1) HATCH (Alum.) - HALLIDAY W2S 48"x48"	126 lb
5) 120" - Conseal CS-231 1.00" (Double)	0 lb
1) 48" x 48" - Conseal CS-231 1.00" (Double)	0 lb
2) Hole - 8	0 lb
2) Hole - 6	0 lb
1) PSX - 16Y NYLO	8 lb

Structure Total:	178819 lb

Rim: 458.5' Rim to Invert: 7.94' Slack: 0" Sump: 276.72" Step Position:

Structure Notes: .
1. PER ASTM C478 SPECIFICATIONS.
2. CONCRETE = 5,000 PSI AT 28 DAYS.
3. ADMIXTURE = CONBLOCK CDA RED.
4. HATCH SUPPLIED BY ICAST (HALLIDAY W2S 48"x48").

.
REINFORCING PER ASTM A615 (GRADE 60).
- TOP SLAB TOP LAYER = #4 BARS AT 12" C.C.E.W.
- TOP SLAB BTM LAYER = #5 BARS AT 6" C.C.E.W.
- RISER/WALLS (As .30)
- BOTTOM SLAB TONGUE = #5 BARS AT 6" C.C.E.W.
- BOTTOM SLAB = #6BARS AT 6" C.C.E.W. (DOUBLE MAT)

NOTES:
1. PER ASTM C-478 LATEST REVISION
2. CONCRETE: 5,000 PSI AT 28 DAYS.
3. CONBLOCK CDA RED ADMIXTURE REQUIRED
4. REINFORCEMENT: AS SHOWN BELOW. PER ASTM A615 (GRADE 60)
5. JOINT SEALANT – 1" CS-231-DOUBLE

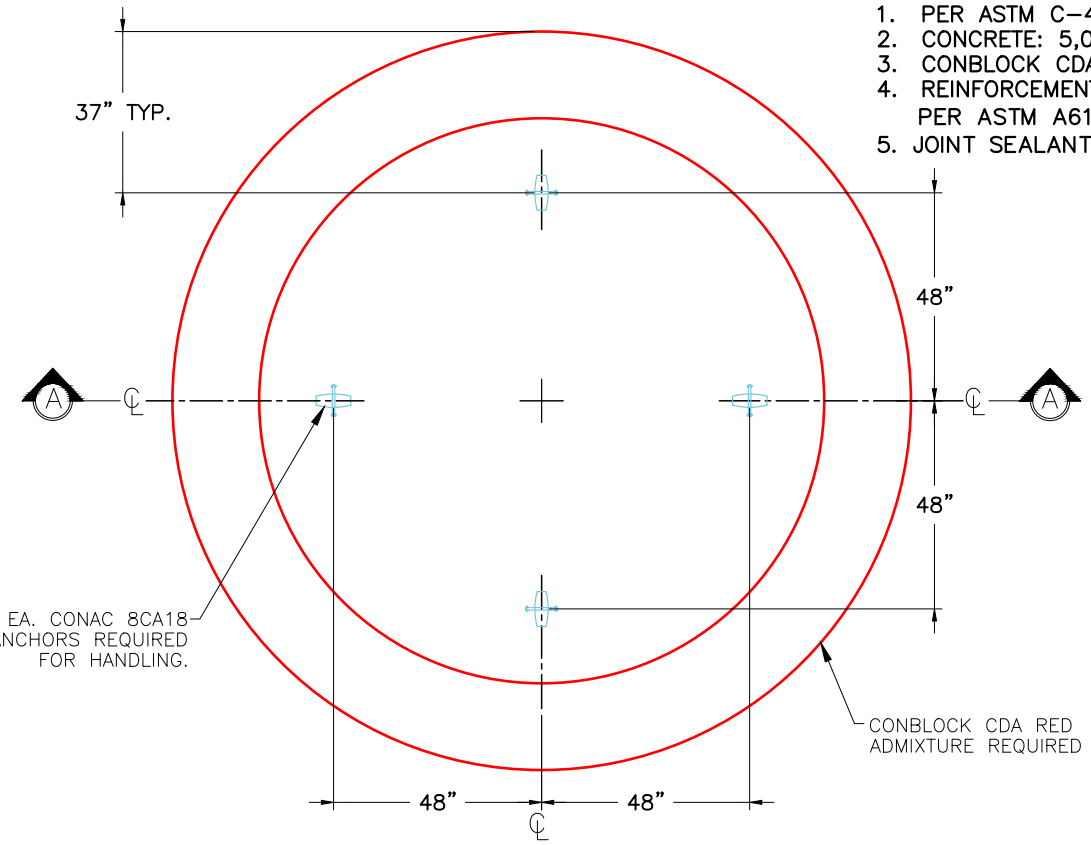

PLAN VIEW

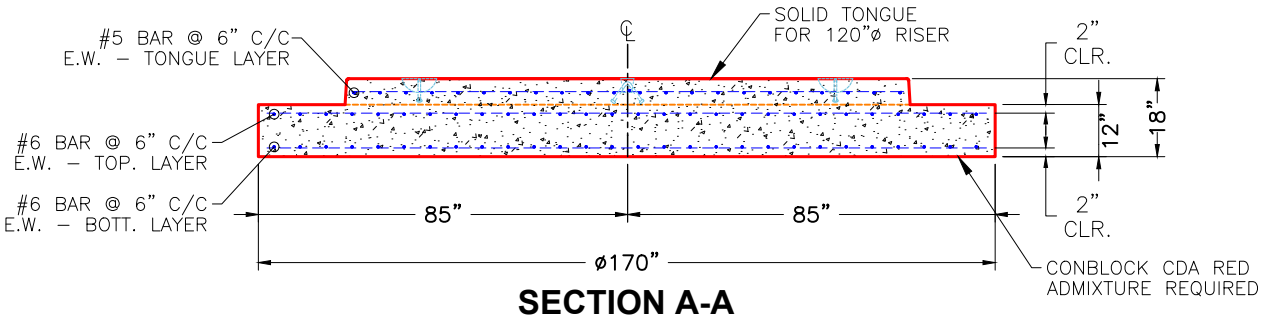

SECTION A-A

Coating (Int): Coating (Ext):	Seam Up: Tongue Seam Dn: n/a	Wall Thickness: 11" Floor Height: 12"	Height (Int): 0" Height (Ext): 0"	Weight (Net): 29640 lb Volume (Net): 7.57cu.yd

Job Name: 26-2078 Lincoln & Coleman Street Sewer Job Location: Lawrenceburg, KY Contractor: Shouse Excavating	Plant: Beaver Dam 5/14/2026 1:16:19 PM	Tech: S. Felletter PC: C. Goff	

Structure ID: A1 SS-MH

P2 MH048LD06SP **MH FLAT TOP SPEC. HT. (6") w/24" ECC Hole F/F**

P3) 24" - CASTING HEIGHT - 4"	0 lb
P2) 48" - MH FLAT TOP SPEC. HT. (6") w/24" ECC Hole F/F - 6"	1102 lb
P1) 48" - MH BASE Custom Ht F/n - 17"	2422 lb
1) JOINT WRAP - 0.065"x6"x50' CONSEAL CS212	0 lb
1) JOINT WRAP PRIMER - CONSEAL CS-75 (1 gal.)	0 lb
1) 48" - MH INVERT CHANNEL - FULL HEIGHT	1440 lb
1) CASTING - HOE MC-285 F/C Sanitary	284 lb
1) 48" - Conseal CS-102 1.00" (Double)	0 lb
2) PSX - 12-08 NYLO	16 lb
1) MH Step ML-10-TDS-NCR - 10"	0 lb
Structure Total:	5264 lb

Structure Notes:
1. PER ASTM C478 SPECIFICATIONS.
2. CONCRETE = 4,000 PSI AT 28 DAYS.
3. CASTING BY ICAST (HOE MCS-285 "SAN" F/C).

REINFORCING PER ASTM A615 (GRADE 60).
- TOP SLAB (As .62) #5 BARS AT 6" C.C.E.W.
- RISER/WALLS (As .12)
- FLOOR (As .31) #5 BARS AT 12" C.C.E.W.

NOTES:
1. MANUFACTURED TO ASTM C-478 (LATEST REVISION).
2. CONCRETE: 4,000 PSI AT 28 DAYS.
3. REINFORCING: #5 BAR @ 6" C.C. E.W. (GRADE 60).

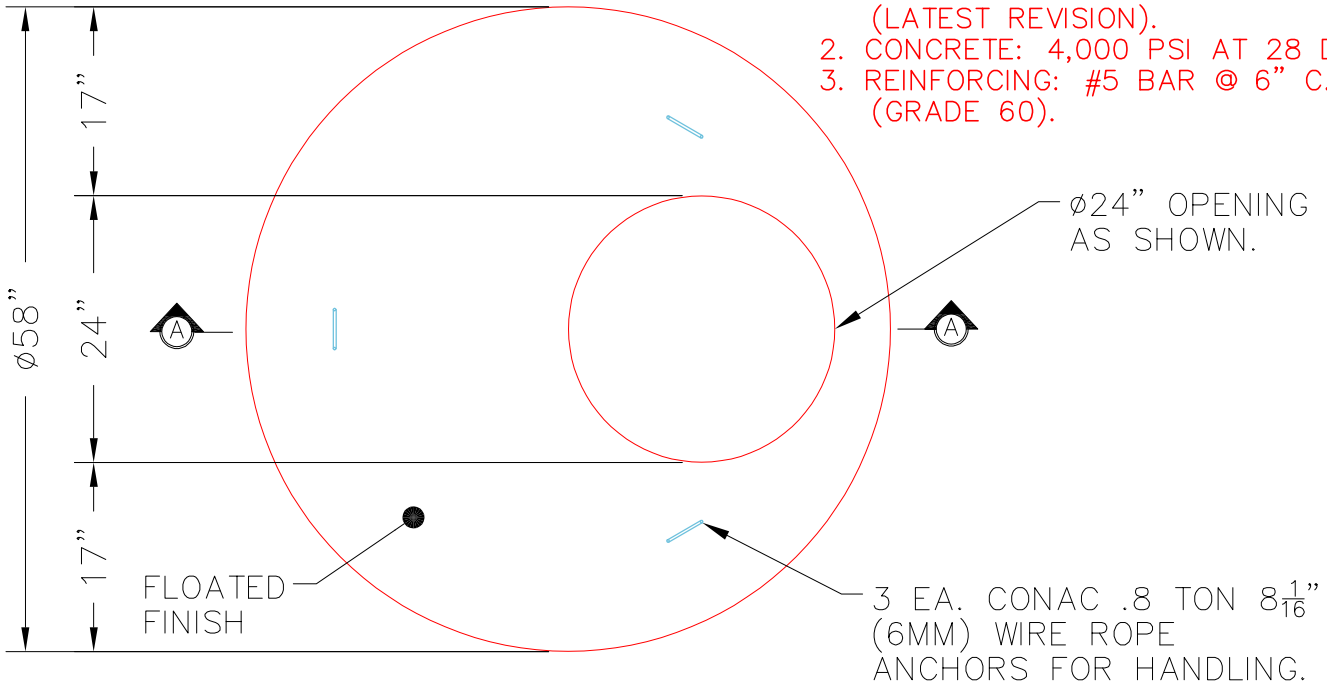

PLAN VIEW

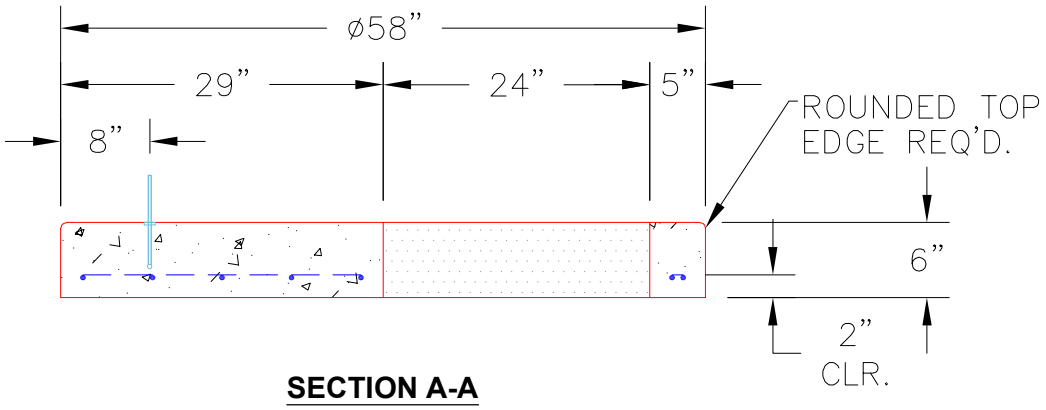

SECTION A-A

Coating (Int): Coating (Ext):	Seam Up: Flat Seam Dn: Flat	Wall Thickness: 5"	Height (Ext): 6"	Weight (Net): 1102 lb Volume (Net): 0.28cu.yd

Job Name: 25-2471 - Texas Roadhouse Job Location: Danville, KY Contractor: McCain Bros Excavating LLC	Plant: 100 6/12/2026 3:42:24 PM	Tech: Jared - F PC: M. Sullivan	

Structure ID: 10

P2 MH048CN42 ECC CONE w/ 24" HOLE F/G

P3) 24" - CASTING HEIGHT - 7"	0 lb
P2) 48" - ECC CONE w/ 24" HOLE F/G - 42"	3200 lb
P1) 48" - MH BASE T/n - 60"	4988 lb
1) 48" - SGL 1"x14.5' Butyl (2x)	0 lb
1) Hole - 38	0 lb
9) MH Step ML-10-TDS-NCR - 10"	0 lb
Structure Total:	8188 lb

Structure Notes: .
1. PER ASTM C478 SPECIFICATIONS.
2. CONCRETE = 4,000 PSI AT 28 DAYS.
3. NO INVERT CHANNEL.
4. (7" TALL CASTING BY OTHERS)

.
REINFORCING PER ASTM A615 (GRADE 60).
- CONE (As .12)
- RISER/WALLS (As .18)
- FLOOR (As .37) #5 BARS AT 10" C.C.E.W.

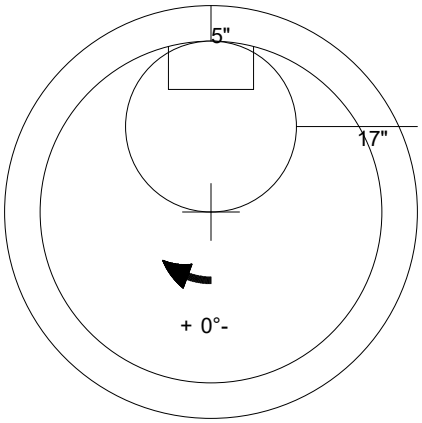

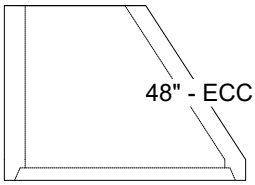

48" - ECC CONE w/ 24" HOLE F/G - 42" - (P2)

Coating (Int): Coating (Ext):	Seam Up: Flat Seam Dn: Groove	Wall Thickness: 5"	Height (Ext): 42"	Weight (Net): 3200 lb Volume (Net): 0.5cu.yd

Job Name: 25-2471 - Texas Roadhouse Job Location: Danville, KY Contractor: McCain Bros Excavating LLC	Plant: 100 6/11/2026 11:35:53 AM	Tech: Jared - F PC: M. Sullivan	

Structure ID: 5A

P2 MH048LD07-18x36RECT **MH FLAT TOP w/18"x36" Hole F/F**

P3) 18" x 36" - CASTING HEIGHT - 5.5"	0 lb
P2) 48" - MH FLAT TOP w/18"x36" Hole F/F - 7"	1171 lb
P1) 48" - MH BASE Custom Ht F/n - 26"	3011 lb
1) 48" - Conseal CS-102 1.00"	0 lb
1) 18" x 36" - Conseal CS-102 1.00"	0 lb
1) Hole - 20	0 lb
Structure Total:	4183 lb

Structure Notes: .
1. PER ASTM C478 SPECIFICATIONS.
2. CONCRETE = 4,000 PSI AT 28 DAYS.
3. NO STEPS AND NO INVERT CHANNEL.
4. CASTING SUPPLIED BY OTHERS (HOE 580-A F/G).

.
REINFORCING PER ASTM A615 (GRADE 60).
- TOP SLAB (As .62) #5 BARS AT 6" C.C.E.W..
- RISER/WALLS (As .12)
- FLOOR (As .31) #5 BARS AT 12" C.C.E.W.

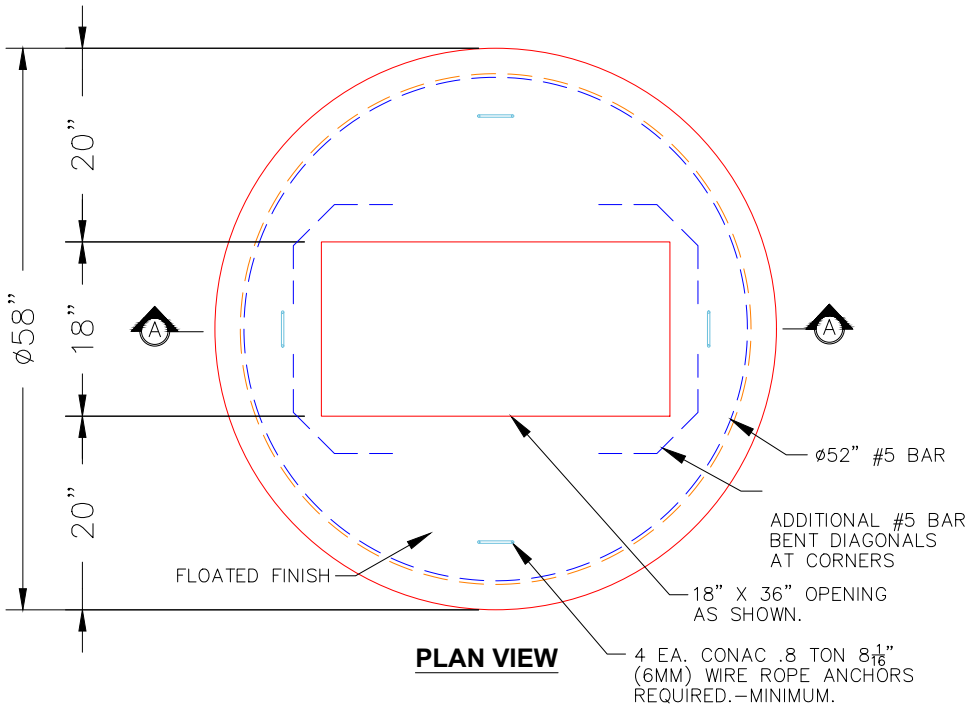

PLAN VIEW

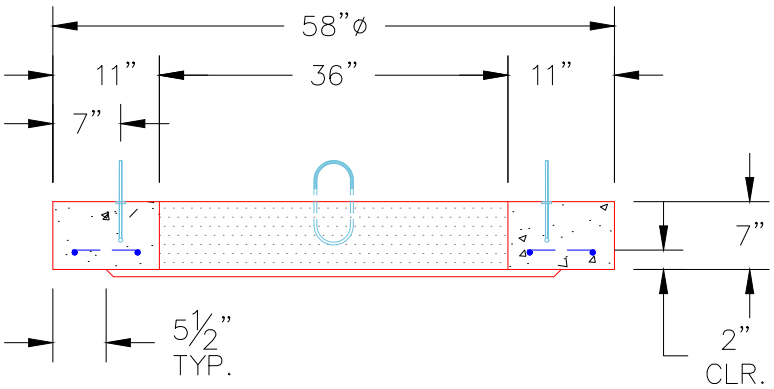

SECTION A-A

NOTES:

1. MANUFACTURED TO ASTM C-478 (LATEST REVISION).
2. CONCRETE: 4,000 PSI AT 28 DAYS.
3. REINFORCING: #5 BAR @ 6" O.C. E.W. (GRADE 60).

Coating (Int): Coating (Ext):	Seam Up: Flat Seam Dn: Flat	Wall Thickness: 5"	Height (Ext): 7"	Weight (Net): 1171 lb Volume (Net): 0.3cu.yd

Job Name: 25-2471 - Texas Roadhouse Job Location: Danville, KY Contractor: McCain Bros Excavating LLC	Plant: 100 6/11/2026 11:35:23 AM	Tech: Jared - F PC: M. Sullivan	

Structure ID: 5A

P1 MH048BAVF **MH BASE Custom Ht F/n**

P3) 18" x 36" - CASTING HEIGHT - 5.5"	0 lb
P2) 48" - MH FLAT TOP w/18"x36" Hole F/F - 7"	1171 lb
P1) 48" - MH BASE Custom Ht F/n - 26"	3011 lb
1) 48" - Conseal CS-102 1.00"	0 lb
1) 18" x 36" - Conseal CS-102 1.00"	0 lb
1) Hole - 20	0 lb
Structure Total:	4183 lb

Structure Notes: .
1. PER ASTM C478 SPECIFICATIONS.
2. CONCRETE = 4,000 PSI AT 28 DAYS.
3. NO STEPS AND NO INVERT CHANNEL.
4. CASTING SUPPLIED BY OTHERS (HOE 580-A F/G).

.
REINFORCING PER ASTM A615 (GRADE 60).
- TOP SLAB (As .62) #5 BARS AT 6" C.C.E.W..
- RISER/WALLS (As .12)
- FLOOR (As .31) #5 BARS AT 12" C.C.E.W.

Rim: 1036.25' Rim to Invert: 3.25' Slack: 0.5" Sump: 0" Step Position:

Position	Elev	Angle	Ext. (cw)	Pipe	Pipe OD	Connector	Hole	Horz Size	Up (_)	Offset
Invert 1	1033'	0°	0"	15" HDPE	17.6"	Hole 20	20"	20.629"	-1.25"	0"
Invert 2										
Invert 3										
Invert 4										
Invert 5										
Invert 6										
Invert 7										
Invert 8										

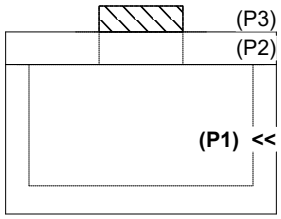

RIGHT-SIDE UP VIEW (int. dimensions)

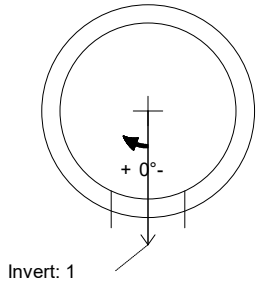

Invert: 1
Degree: 0°
Horz: 0"
Hole: 20"
Up(_): -1.25"

UPSIDE-DOWN VIEW (int. dimenions)

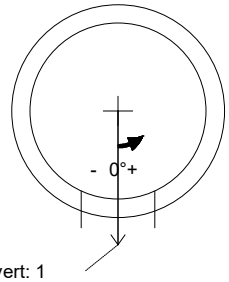

Invert: 1
Degree: 0°
Horz: 0"
Hole: 20"
Up(_): -1.25"

INSIDE WALL DIMENSIONS

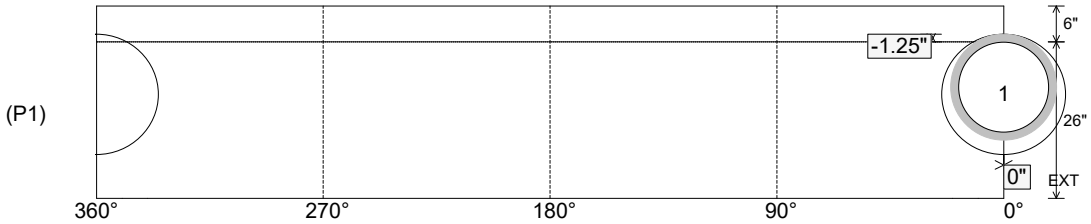

Coating (Int): Coating (Ext):	Seam Up: Flat Seam Dn: n/a	Wall Thickness: 5" Floor Height: 6"	Height (Int): 26" Height (Ext): 32"	Weight (Net): 3011 lb Volume (Net): 0.77cu.yd

Job Name: 25-2471 - Texas Roadhouse Job Location: Danville, KY Contractor: McCain Bros Excavating LLC	Plant: 100 6/11/2026 11:35:22 AM	Tech: Jared - F PC: M. Sullivan	

Structure ID: 6

P1 MH048BAVF **MH BASE Custom Ht F/n**

P3) 18" x 36" - CASTING HEIGHT - 5.5"	0 lb
P2) 48" - MH FLAT TOP w/18"x36" Hole F/F - 6"	1004 lb
P1) 48" - MH BASE Custom Ht F/n - 19"	2379 lb
1) 48" - Conseal CS-102 1.00"	0 lb
1) 18" x 36" - Conseal CS-102 1.00"	0 lb
1) DOGHOUSE INVRTD - 24"x20"	0 lb
1) Hole - 16	0 lb
Structure Total:	3383 lb

Structure Notes: .
1. PER ASTM C478 SPECIFICATIONS.
2. CONCRETE = 4,000 PSI AT 28 DAYS.
3. NO STEPS AND NO INVERT CHANNEL.
4. CASTING SUPPLIED BY OTHERS (HOE 580-A F/G).

.
REINFORCING PER ASTM A615 (GRADE 60).
- TOP SLAB (As .62) #5 BARS AT 6" C.C.E.W..
- RISER/WALLS (As .12)
- FLOOR (As .31) #5 BARS AT 12" C.C.E.W.

Rim: 1034' Rim to Invert: 2.59' Slack: 0.58" Sump: 0" Step Position:

Position	Elev	Angle	Ext. (cw)	Pipe	Pipe OD	Connector	Hole	Horz Size	Up (_)	Offset
Invert 1	1031.41'	0°	0"	18" HDPE	21.2"	DOGHOUSE INVRTD 24"x20"	24" x 20"	25.133"	-1.625"	0"
Invert 2	1031.41'	102°	51.625"	12" HDPE	14.5"	Hole 16	16"	16.312"	-1.25"	0"
Invert 3										
Invert 4										
Invert 5										
Invert 6										
Invert 7										
Invert 8										

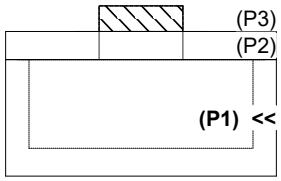

RIGHT-SIDE UP VIEW (int. dimensions)

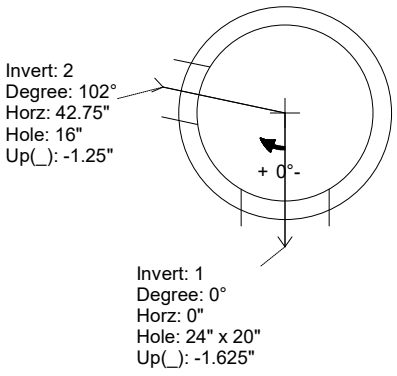

UPSIDE-DOWN VIEW (int. dimenions)

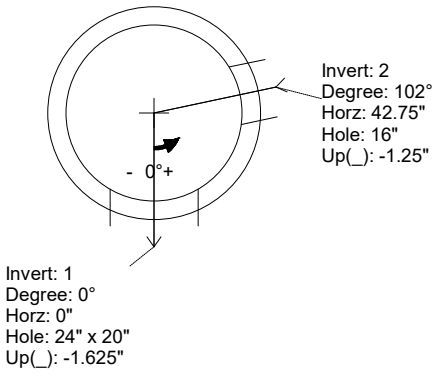

INSIDE WALL DIMENSIONS

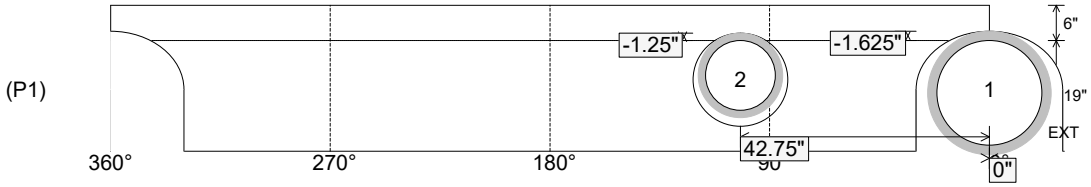

Coating (Int): Coating (Ext):	Seam Up: Flat Seam Dn: n/a	Wall Thickness: 5" Floor Height: 6"	Height (Int): 19" Height (Ext): 25"	Weight (Net): 2379 lb Volume (Net): 0.61cu.yd

Job Name: 25-2471 - Texas Roadhouse Job Location: Danville, KY Contractor: McCain Bros Excavating LLC	Plant: 100 6/11/2026 11:35:52 AM	Tech: Jared - F PC: M. Sullivan	

Structure ID: 6

P2 MH048LD06SP **MH FLAT TOP w/18"x36" Hole F/F**

P3) 18" x 36" - CASTING HEIGHT - 5.5"	0 lb
P2) 48" - MH FLAT TOP w/18"x36" Hole F/F - 6"	1004 lb
P1) 48" - MH BASE Custom Ht F/n - 19"	2379 lb
1) 48" - Conseal CS-102 1.00"	0 lb
1) 18" x 36" - Conseal CS-102 1.00"	0 lb
1) DOGHOUSE INVRTD - 24"x20"	0 lb
1) Hole - 16	0 lb
Structure Total:	3383 lb

Structure Notes: .
1. PER ASTM C478 SPECIFICATIONS.
2. CONCRETE = 4,000 PSI AT 28 DAYS.
3. NO STEPS AND NO INVERT CHANNEL.
4. CASTING SUPPLIED BY OTHERS (HOE 580-A F/G).

.
REINFORCING PER ASTM A615 (GRADE 60).
- TOP SLAB (As .62) #5 BARS AT 6" C.C.E.W..
- RISER/WALLS (As .12)
- FLOOR (As .31) #5 BARS AT 12" C.C.E.W.

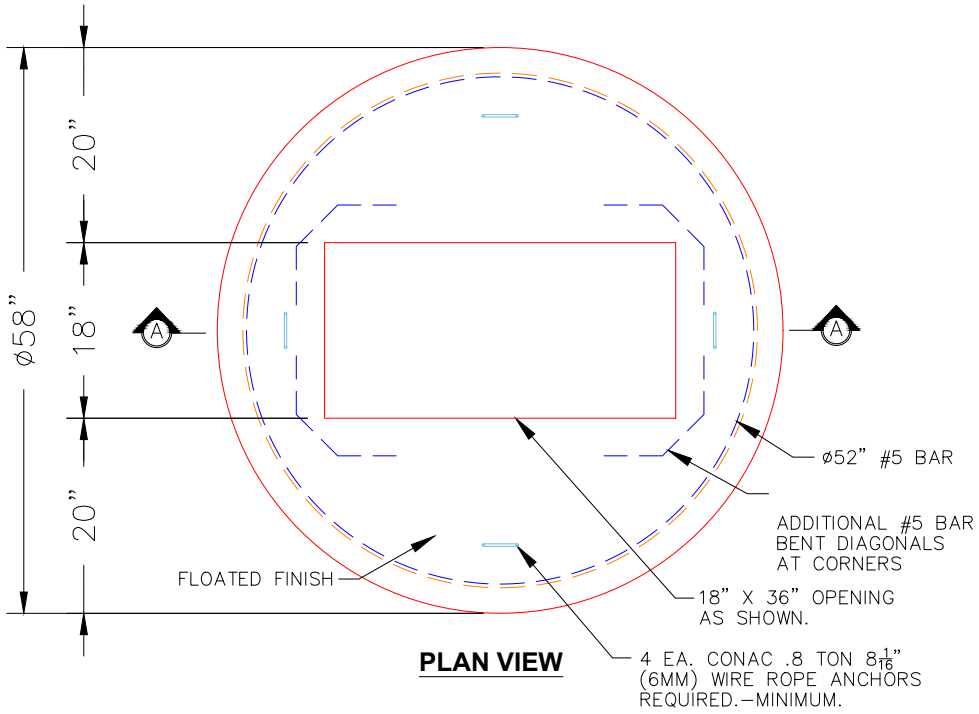

PLAN VIEW

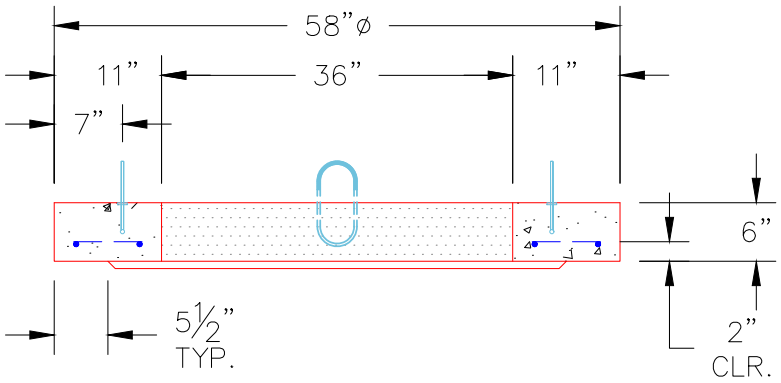

SECTION A-A

NOTES:

1. MANUFACTURED TO ASTM C–478 (LATEST REVISION).
2. CONCRETE: 4,000 PSI AT 28 DAYS.
3. REINFORCING: #5 BAR @ 6" O.C. E.W. (GRADE 60).

Coating (Int): Coating (Ext):	Seam Up: Flat Seam Dn: Flat	Wall Thickness: 5"	Height (Ext): 6"	Weight (Net): 1004 lb Volume (Net): 0.26cu.yd

Job Name: 25-2471 - Texas Roadhouse Job Location: Danville, KY Contractor: McCain Bros Excavating LLC	Plant: 100 6/12/2026 3:42:04 PM	Tech: Jared - F PC: M. Sullivan	

Structure ID: 4

P1 MH048BA42 MH BASE T/n

P3) 24" - CASTING HEIGHT - 7"	0 lb
P2) 48" - ECC CONE w/ 24" HOLE F/G - 36"	3000 lb
P1) 48" - MH BASE T/n - 42"	3554 lb
1) 48" - Conseal CS-102 1.00"	0 lb
1) 24" - Conseal CS-102 1.00"	0 lb
1) Hole - 30	0 lb
2) Hole - 24	0 lb
6) MH Step ML-10-TDS-NCR - 10"	0 lb
Structure Total:	6554 lb

Structure Notes: .
1. PER ASTM C478 SPECIFICATIONS.
2. CONCRETE = 4,000 PSI AT 28 DAYS.
3. NO INVERT CHANNEL.
4. (7" TALL CASTING BY OTHERS)

.
REINFORCING PER ASTM A615 (GRADE 60).
- CONE (As .12)
- RISER/WALLS (As .12)
- FLOOR (As .31) #5 BARS AT 12" C.C.E.W.

Rim: 1036.05' Rim to Invert: 7.15' Slack: 2.7" Sump: 1.9" Step Position: 189°

Position	Elev	Angle	Ext. (cw)	Pipe	Pipe OD	Connector	Hole	Horz Size	Up (_)	Offset
Invert 1	1028.9'	0°	0"	24" HDPE	27.8"	Hole 30	30"	32.406"	0"	0"
Invert 2	1028.9'	100°	50.625"	18" HDPE	21.2"	Hole 24	24"	25.133"	0.25"	0"
Invert 3	1028.9'	278°	140.75"	18" HDPE	21.2"	Hole 24	24"	25.133"	0.25"	0"
Invert 4										
Invert 5										
Invert 6										
Invert 7										
Invert 8										

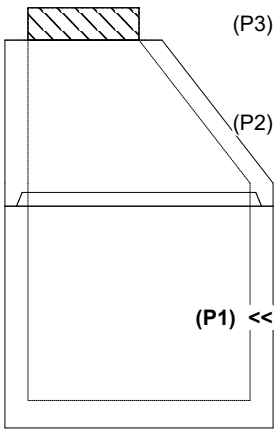

RIGHT-SIDE UP VIEW (int. dimensions)

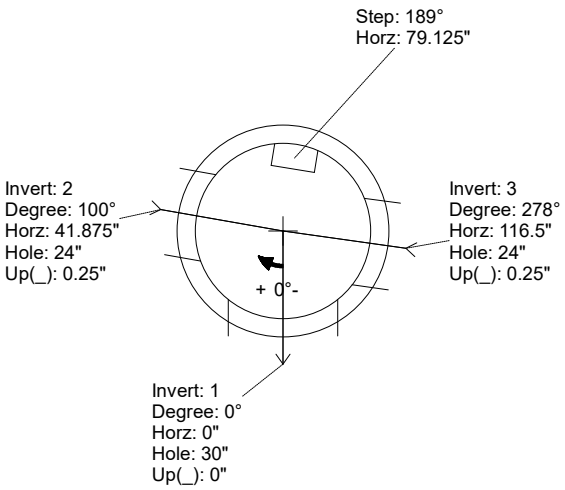

UPSIDE-DOWN VIEW (int. dimenions)

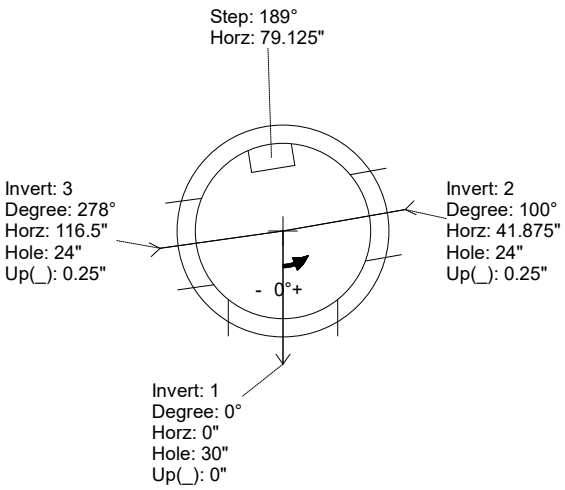

INSIDE WALL DIMENSIONS

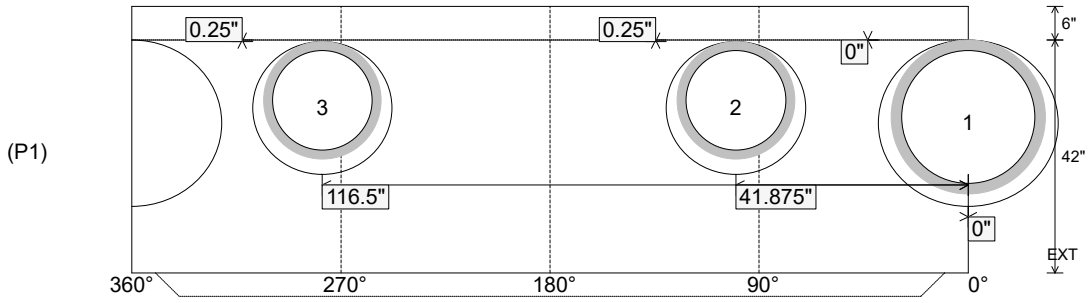

Coating (Int): Coating (Ext):	Seam Up: Tongue Seam Dn: n/a	Wall Thickness: 5" Floor Height: 6"	Height (Int): 42" Height (Ext): 48"	Weight (Net): 3554 lb Volume (Net): 0.91cu.yd

Job Name: 25-2471 - Texas Roadhouse Job Location: Danville, KY Contractor: McCain Bros Excavating LLC	Plant: 100 6/11/2026 11:35:20 AM	Tech: Jared - F PC: M. Sullivan	

Structure ID: 4A

P1 MH048BA48 MH BASE T/n

P3) 18" x 36" - CASTING HEIGHT - 5.5"	0 lb
P2) 48" - MH FLAT TOP w/18"x36" Hole F/G - 12"	2008 lb
P1) 48" - MH BASE T/n - 48"	4318 lb
1) 48" - Conseal CS-102 1.00"	0 lb
1) 18" x 36" - Conseal CS-102 1.00"	0 lb
1) Hole - 24	0 lb
1) Hole - 20	0 lb
1) Hole - 10	0 lb
Structure Total:	6326 lb

Structure Notes: .
1. PER ASTM C478 SPECIFICATIONS.
2. CONCRETE = 4,000 PSI AT 28 DAYS.
3. NO STEPS AND NO INVERT CHANNEL.
4. CASTING SUPPLIED BY OTHERS (HOE 580-A F/G).

.
REINFORCING PER ASTM A615 (GRADE 60).
- TOP SLAB (As .62) #5 BARS AT 6" C.C.E.W..
- RISER/WALLS (As .12)
- FLOOR (As .31) #5 BARS AT 12" C.C.E.W.

Rim: 1037' Rim to Invert: 5.5' Slack: 0.5" Sump: 0" Step Position:

Position	Elev	Angle	Ext. (cw)	Pipe	Pipe OD	Connector	Hole	Horz Size	Up (_)	Offset
Invert 1	1031.5'	0°	0"	18" HDPE	21.2"	Hole 24	24"	25.133"	-1.625"	0"
Invert 2	1031.5'	204°	103.25"	15" HDPE	17.6"	Hole 20	20"	20.629"	-1.25"	0"
Invert 3	1033'	255°	129.125"	6" HDPE	6.9"	Hole 10	10"	10.074"	17.5"	0"
Invert 4										
Invert 5										
Invert 6										
Invert 7										
Invert 8										

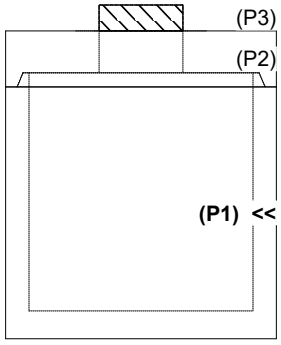

RIGHT-SIDE UP VIEW (int. dimensions)

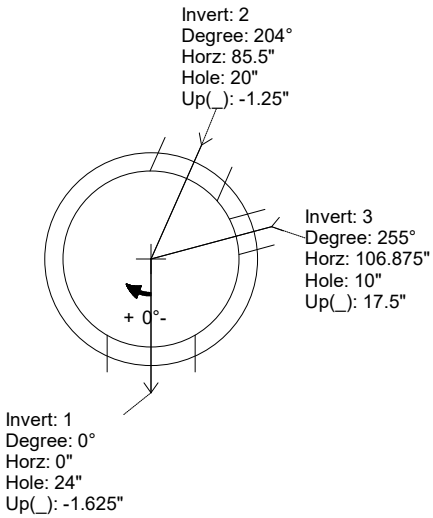

UPSIDE-DOWN VIEW (int. dimenions)

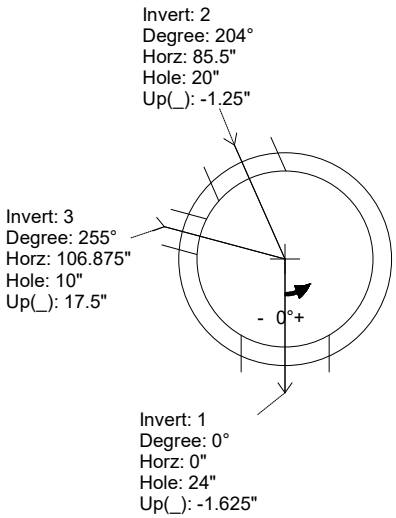

INSIDE WALL DIMENSIONS

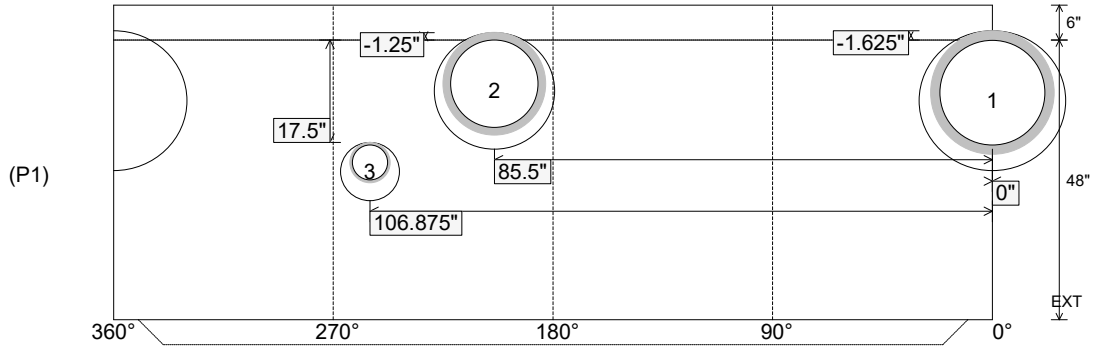

Coating (Int): Coating (Ext):	Seam Up: Tongue Seam Dn: n/a	Wall Thickness: 5" Floor Height: 6"	Height (Int): 48" Height (Ext): 54"	Weight (Net): 4318 lb Volume (Net): 1.1cu.yd

Job Name: 25-4547 - WWTP Improvements & Hydraulic Expansion Job Location: Shepherdsville, KY Contractor: Pace Contracting, LLC	Plant: 100 5/29/2026 3:21:09 PM	Tech: Jared - F PC: J Jarvis	

Structure ID: MH-3

P1 MH048BAVF **MH BASE Custom Ht T/n**

P4) 24" - CASTING HEIGHT - 7"	0 lb
P3) 48" - ECC CONE w/ 24" HOLE F/G - 30"	2050 lb
P2) 48" - MH RISER T/G - 48"	3353 lb
P1) 48" - MH BASE Custom Ht T/n - 28"	3153 lb
1) Chimney Seal - Cretex Chimney Seal	10 lb
1) 48" - MH INVERT CHANNEL - FULL HEIGHT	1440 lb
1) JOINT WRAP - 0.065"x6"x50' CONSEAL CS212	0 lb
1) JOINT WRAP PRIMER - CONSEAL CS-75 (1 gal.)	0 lb
1) CASTING - HOE MC-375-WT F/C Sanitary	271 lb
2) 48" - Conseal CS-102 1.00" (Double)	0 lb
1) PSX - 16Y NYLO	8 lb
1) PSX - 12M NYLO	8 lb
8) MH Step ML-10-TDS-NCR - 10"	0 lb
Structure Total:	10293 lb

Rim: 447.2' Rim to Invert: 9.3' Slack: 1.6" Sump: 3" Step Position: 270°

Structure Notes: .
1. PER ASTM C478 SPECIFICATIONS.
2. CONCRETE = 4,000 PSI AT 28 DAYS.
3. CASTING SUPPLIED BY I-CAST (HOE MC-375-WT F/C SANITARY).
4. 8.5" EXTERNAL CHIMNEY SEAL BY I-CAST.
.
REINFORCING PER ASTM A615 (GRADE 60).
- CONE (As .12)
- RISER/WALLS (As .12)
- FLOOR (As .31) #5 BARS AT 12" C.C.E.W.

Position	Elev	Angle	Ext. (cw)	Pipe	Pipe OD	Connector	Hole	Horz Size	Up (_)	Offset
Invert 1	437.9'	0°	0"	10" DI	11.1"	PSX 16Y NYLO	16"	16.312"	0"	0"
Invert 2	438'	108°	54.625"	8" DI	9"	PSX 12M NYLO	12"	12.129"	2.25"	0"
Invert 3										
Invert 4										
Invert 5										
Invert 6										
Invert 7										
Invert 8										

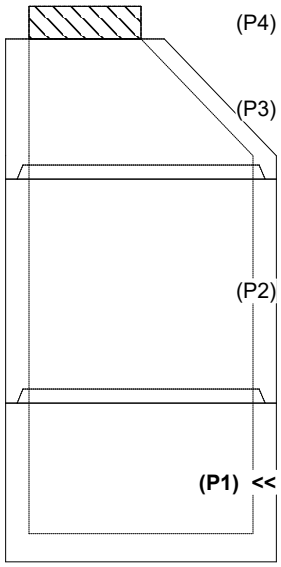

RIGHT-SIDE UP VIEW (int. dimensions)

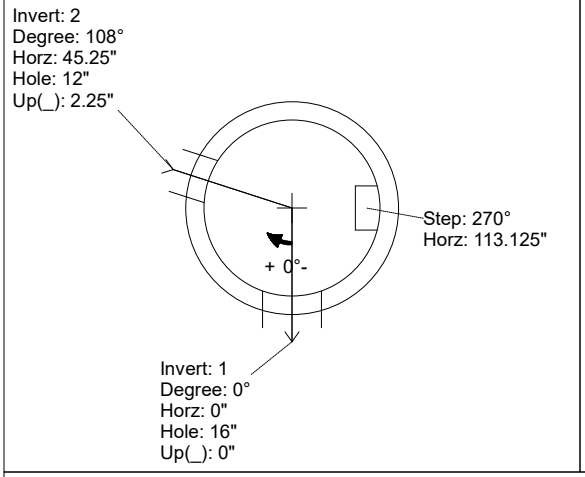

UPSIDE-DOWN VIEW (int. dimenions)

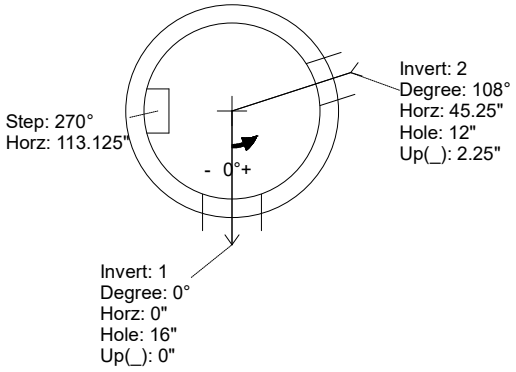

INSIDE WALL DIMENSIONS

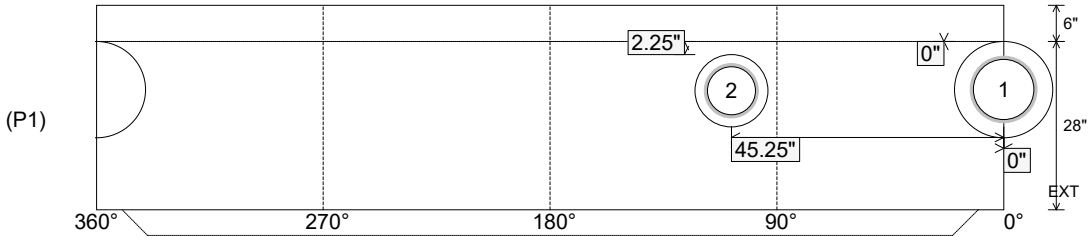

Coating (Int): Coating (Ext):	Seam Up: Tongue Seam Dn: n/a	Wall Thickness: 5" Floor Height: 6"	Height (Int): 28" Height (Ext): 34"	Weight (Net): 3153 lb Volume (Net): 0.8cu.yd

Job Name: 25-4547 - WWTP Improvements & Hydraulic Expansion Job Location: Shepherdsville, KY Contractor: Pace Contracting, LLC	Plant: 100 5/29/2026 3:21:09 PM	Tech: Jared - F PC: J Jarvis	

Structure ID: MH-3

P1 MH048BAVF **MH BASE Custom Ht T/n**

P4) 24" - CASTING HEIGHT - 7"	0 lb
P3) 48" - ECC CONE w/ 24" HOLE F/G - 30"	2050 lb
P2) 48" - MH RISER T/G - 48"	3353 lb
P1) 48" - MH BASE Custom Ht T/n - 28"	3153 lb
1) Chimney Seal - Cretex Chimney Seal	10 lb
1) 48" - MH INVERT CHANNEL - FULL HEIGHT	1440 lb
1) JOINT WRAP - 0.065"x6"x50' CONSEAL CS212	0 lb
1) JOINT WRAP PRIMER - CONSEAL CS-75 (1 gal.)	0 lb
1) CASTING - HOE MC-375-WT F/C Sanitary	271 lb
2) 48" - Conseal CS-102 1.00" (Double)	0 lb
1) PSX - 16Y NYLO	8 lb
1) PSX - 12M NYLO	8 lb
8) MH Step ML-10-TDS-NCR - 10"	0 lb
Structure Total:	10293 lb

Structure Notes: .
1. PER ASTM C478 SPECIFICATIONS.
2. CONCRETE = 4,000 PSI AT 28 DAYS.
3. CASTING SUPPLIED BY I-CAST (HOE MC-375-WT F/C SANITARY).
4. 8.5" EXTERNAL CHIMNEY SEAL BY I-CAST.
.
REINFORCING PER ASTM A615 (GRADE 60).
- CONE (As .12)
- RISER/WALLS (As .12)
- FLOOR (As .31) #5 BARS AT 12" C.C.E.W.

Rim: 447.2' Rim to Invert: 9.3' Slack: 1.6" Sump: 3" Step Position: 270°

Position	Elev	Angle	Ext. (cw)	Pipe	Pipe OD	Connector	Hole	Horz Size	Up (_)	Offset
Invert 1	437.9'	0°	0"	10" DI	11.1"	PSX 16Y NYLO	16"	16.312"	0"	0"
Invert 2	438'	108°	54.625"	8" DI	9"	PSX 12M NYLO	12"	12.129"	2.25"	0"
Invert 3										
Invert 4										
Invert 5										
Invert 6										
Invert 7										
Invert 8										

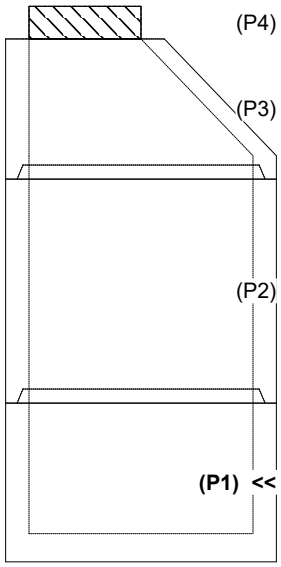

RIGHT-SIDE UP VIEW (int. dimensions)

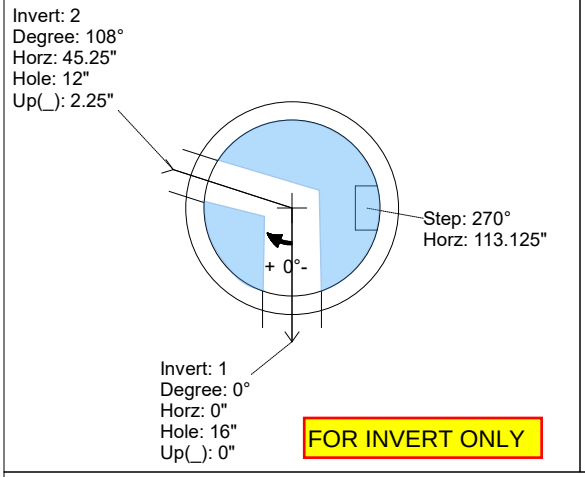

UPSIDE-DOWN VIEW (int. dimenions)

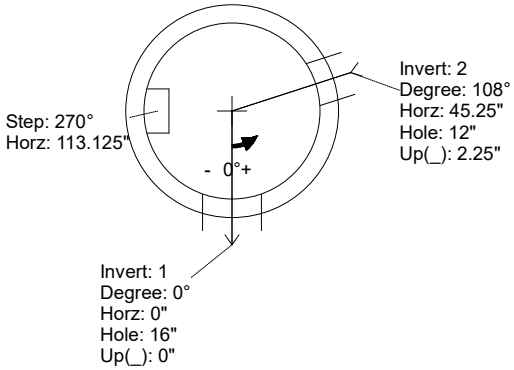

INSIDE WALL DIMENSIONS

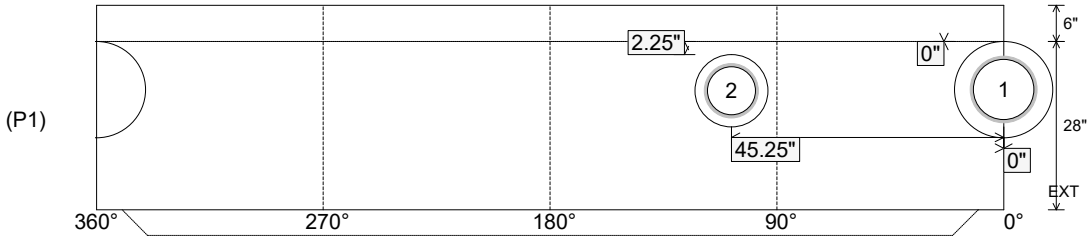

Coating (Int): Coating (Ext):	Seam Up: Tongue Seam Dn: n/a	Wall Thickness: 5" Floor Height: 6"	Height (Int): 28" Height (Ext): 34"	Weight (Net): 3153 lb Volume (Net): 0.8cu.yd

Job Name: 26-1945 The Reserve at Lafayette Job Location: Clarksville, TN Contractor: Hayes Pipe Supply	Plant: Beaver Dam 5/29/2026 3:40:10 PM	Tech: S. Felletter PC: E. Bradley	

Structure ID: MH A-2 SS-MH

P1 MH048BA24CDARED MH BASE w/ConBlock-CDA Red T/n

P3) 24" - CASTING HEIGHT - 7"	0 lb
P2) 48" - ECC CONE w/ 24" HOLE, w/ConBlock-CDA Red F/G - 30"	1961 lb
P1) 48" - MH BASE w/ConBlock-CDA Red T/n - 24"	2938 lb
1) JOINT WRAP - 0.065"x6"x50' CONSEAL CS212	0 lb
1) JOINT WRAP PRIMER - CONSEAL CS-75 (1 gal.)	0 lb
1) 48" - MH INVERT CHANNEL w/ConBlock-CDA Red - FULL HEIGHT	1440 lb
1) 48" - Conseal CS-102 1.00" (Double)	0 lb
1) 24" - Conseal CS-102 1.00" (Double)	0 lb
1) PSX - 12-08 NYLO	8 lb
1) PSX - 8QRS-S NYLO	6 lb
5) MH Step ML-10-TDS-NCR - 10"	0 lb
Structure Total:	6354 lb

Structure Notes:
1. PER ASTM C478 SPECIFICATIONS.
2. CONCRETE = 4,000 PSI AT 28 DAYS.
3. ADMIXTURE = CONBLOCK CDA RED.
4. CASTING BY OTHERS.

REINFORCING PER ASTM A615 (GRADE 60).
- CONE (As .12)
- RISER/WALLS (As .12)
- FLOOR (As .31) #5 BARS AT 12" C.C.E.W.

Rim: 580.36' Rim to Invert: 4.92' Slack: 0.04" Sump: 2" Step Position: 225°

Position	Elev	Angle	Ext. (cw)	Pipe	Pipe OD	Connector	Hole	Horz Size	Up (_)	Offset
Invert 1	575.44'	0°	0"	8" PVC SDR35	8.5"	PSX 12-08 NYLO	12"	12.129"	0"	0"
Invert 2	575.54'	90°	45.553"	4" PVC SDR35	4.25"	PSX 8QRS-S NYLO	8"	8.038"	1.2"	0"
Invert 3										
Invert 4										
Invert 5										
Invert 6										
Invert 7										
Invert 8										

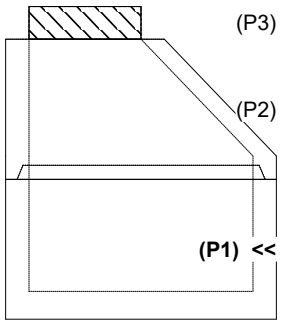

RIGHT-SIDE UP VIEW (int. dimensions)

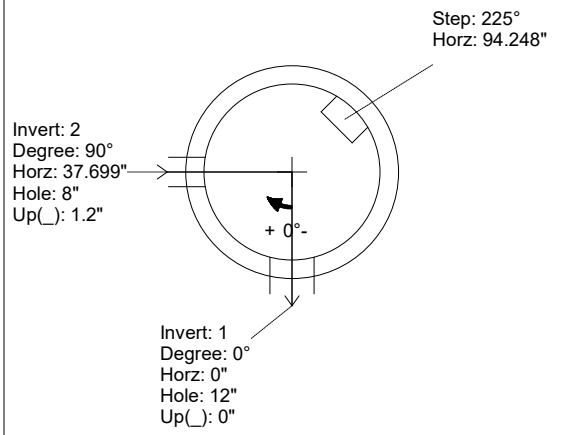

UPSIDE-DOWN VIEW (int. dimenions)

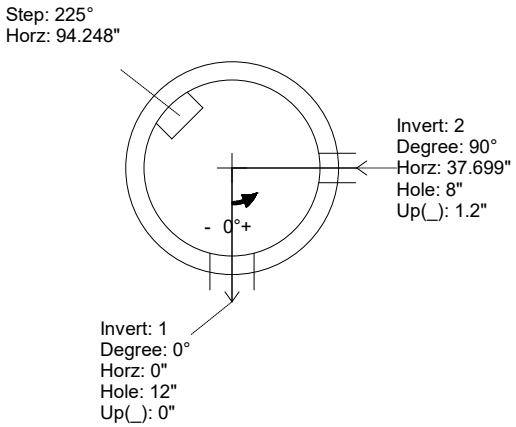

INSIDE WALL DIMENSIONS

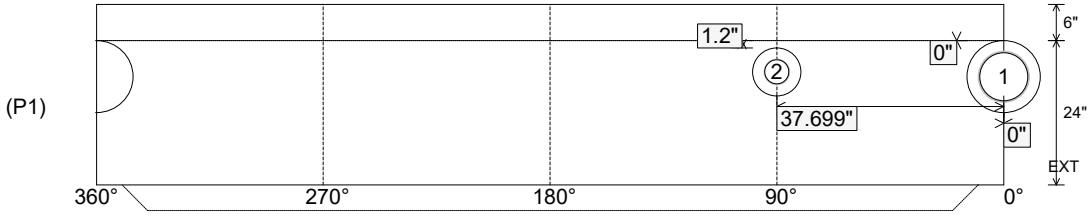

Coating (Int): Coating (Ext):	Seam Up: Tongue Seam Dn: n/a	Wall Thickness: 5" Floor Height: 6"	Height (Int): 24" Height (Ext): 30"	Weight (Net): 2938 lb Volume (Net): 0.75cu.yd

Job Name: 26-1945 The Reserve at Lafayette Job Location: Clarksville, TN Contractor: Hayes Pipe Supply	Plant: Beaver Dam 5/29/2026 3:40:10 PM	Tech: S. Felletter PC: E. Bradley	

Structure ID: MH A-2 SS-MH

P1 MH048BA24CDARED MH BASE w/ConBlock-CDA Red T/n

P3) 24" - CASTING HEIGHT - 7"	0 lb
P2) 48" - ECC CONE w/ 24" HOLE, w/ConBlock-CDA Red F/G - 30"	1961 lb
P1) 48" - MH BASE w/ConBlock-CDA Red T/n - 24"	2938 lb
1) JOINT WRAP - 0.065"x6"x50' CONSEAL CS212	0 lb
1) JOINT WRAP PRIMER - CONSEAL CS-75 (1 gal.)	0 lb
1) 48" - MH INVERT CHANNEL w/ConBlock-CDA Red - FULL HEIGHT	1440 lb
1) 48" - Conseal CS-102 1.00" (Double)	0 lb
1) 24" - Conseal CS-102 1.00" (Double)	0 lb
1) PSX - 12-08 NYLO	8 lb
1) PSX - 8QRS-S NYLO	6 lb
5) MH Step ML-10-TDS-NCR - 10"	0 lb
Structure Total:	6354 lb

Structure Notes:
1. PER ASTM C478 SPECIFICATIONS.
2. CONCRETE = 4,000 PSI AT 28 DAYS.
3. ADMIXTURE = CONBLOCK CDA RED.
4. CASTING BY OTHERS.

REINFORCING PER ASTM A615 (GRADE 60).
- CONE (As .12)
- RISER/WALLS (As .12)
- FLOOR (As .31) #5 BARS AT 12" C.C.E.W.

Invert channel drawing
Full height invert

Rim: 580.36' Rim to Invert: 4.92' Slack: 0.04" Sump: 2" Step Position: 225°

Position	Elev	Angle	Ext. (cw)	Pipe	Pipe OD	Connector	Hole	Horz Size	Up (_)	Offset
Invert 1	575.44'	0°	0"	8" PVC SDR35	8.5"	PSX 12-08 NYLO	12"	12.129"	0"	0"
Invert 2	575.54'	90°	45.553"	4" PVC SDR35	4.25"	PSX 8QRS-S NYLO	8"	8.038"	1.2"	0"
Invert 3										
Invert 4										
Invert 5										
Invert 6										
Invert 7										
Invert 8										

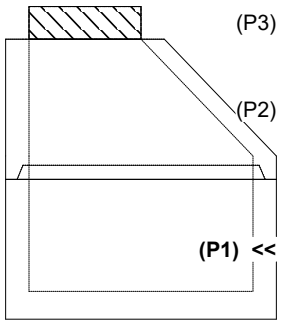

RIGHT-SIDE UP VIEW (int. dimensions)

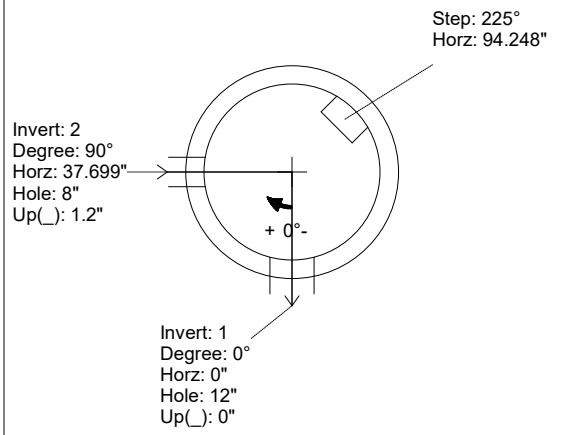

UPSIDE-DOWN VIEW (int. dimenions)

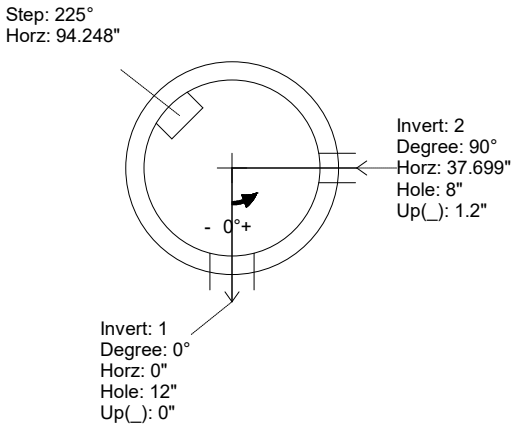

INSIDE WALL DIMENSIONS

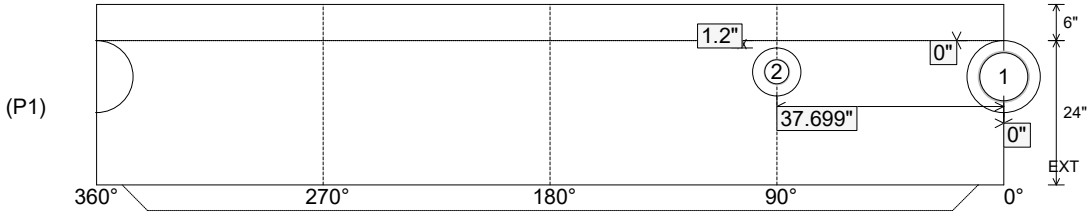

Coating (Int): Coating (Ext):	Seam Up: Tongue Seam Dn: n/a	Wall Thickness: 5" Floor Height: 6"	Height (Int): 24" Height (Ext): 30"	Weight (Net): 2938 lb Volume (Net): 0.75cu.yd

Job Name: 26-2078 Lincoln & Coleman Street Sewer Job Location: Lawrenceburg, KY Contractor: Shouse Excavating	Plant: Beaver Dam 5/14/2026 1:16:20 PM	Tech: S. Felletter PC: C. Goff	

Structure ID: A3 SS-MH

P2 MH048LD12ECC **MH FLAT TOP w/ 24" ECC Hole F/G**

P4) 24" - CASTING HEIGHT - 7"	0 lb
P3) 24" - GRADE RING F/F - 3"	202 lb
P2) 48" - MH FLAT TOP w/ 24" ECC Hole F/G - 12"	1561 lb
P1) 48" - MH BASE T/n - 24"	2959 lb
1) JOINT WRAP - 0.065"x6"x50' CONSEAL CS212	0 lb
1) JOINT WRAP PRIMER - CONSEAL CS-75 (1 gal.)	0 lb
1) 48" - MH INVERT CHANNEL - FULL HEIGHT	1440 lb
1) CASTING - HOE MC-315 F/C Sanitary	258 lb
1) 48" - Conseal CS-102 1.00" (Double)	0 lb
2) 24" - Conseal CS-102 1.00" (Double)	0 lb
1) PSX - 12-08 NYLO	8 lb
1) MH Step ML-10-TDS-NCR - 10"	0 lb

Structure Total:	6428 lb

Structure Notes:
1. PER ASTM C478 SPECIFICATIONS.
2. CONCRETE = 4,000 PSI AT 28 DAYS.
3. CASTING BY ICAST (HOE MC-315 F/C "SANITARY").

REINFORCING PER ASTM A615 (GRADE 60).
- TOP SLAB (As .62) #5 BARS AT 6" C.C.E.W.
- RISER/WALLS (As .12)
- FLOOR (As .31) #5 BARS AT 12" C.C.E.W.

NOTES:
1. MANUFACTURED TO ASTM C-478 (LATEST REVISION).
2. CONCRETE: 4,000 PSI AT 28 DAYS.
3. REINFORCING: #5 BAR @ 6" C.C. E.W. (GRADE 60).

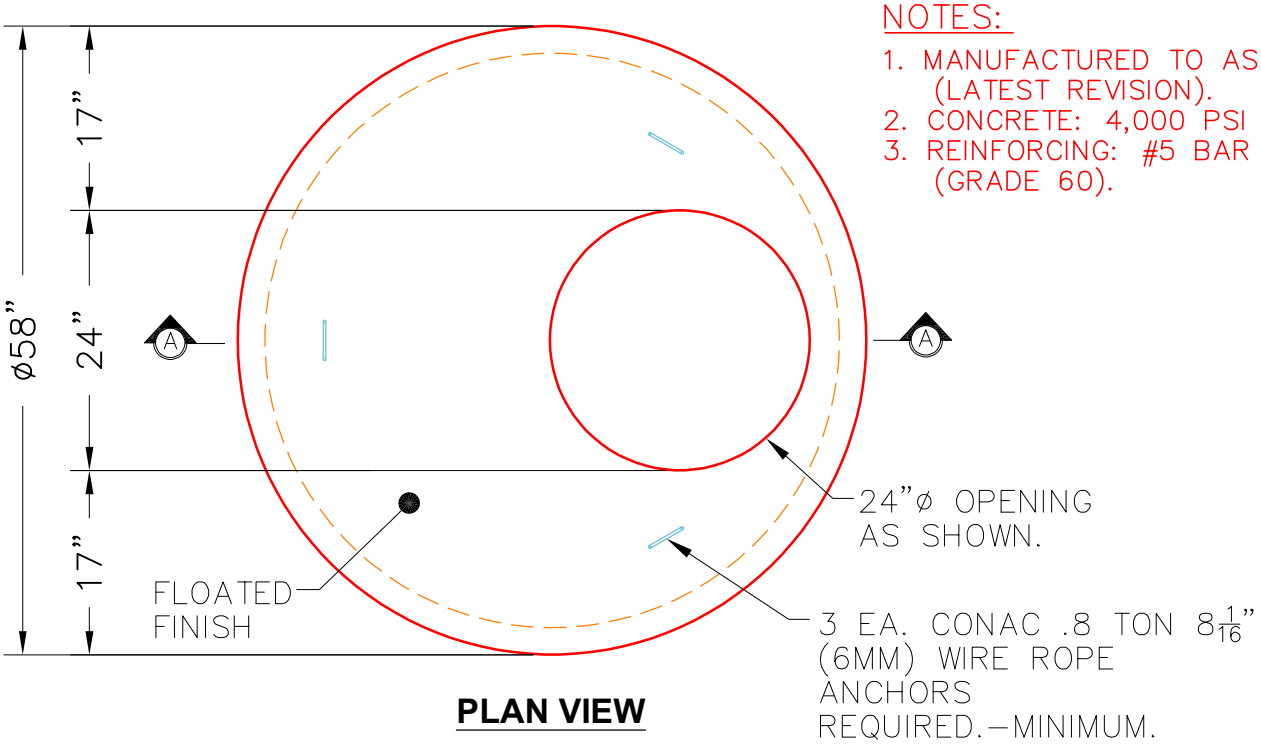

PLAN VIEW

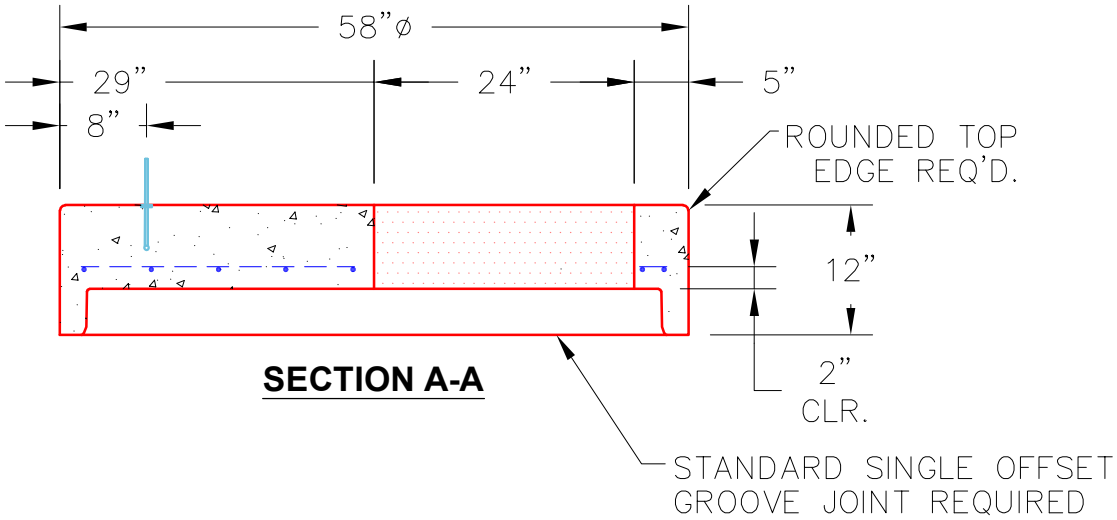

SECTION A-A

Coating (Int): Coating (Ext):	Seam Up: Flat Seam Dn: Groove	Wall Thickness: 5"	Height (Ext): 12"	Weight (Net): 1561 lb Volume (Net): 0.42cu.yd

Job Name: 26-2078 Lincoln & Coleman Street Sewer Job Location: Lawrenceburg, KY Contractor: Shouse Excavating	Plant: Beaver Dam 5/14/2026 1:16:20 PM	Tech: S. Felletter PC: C. Goff	

Structure ID: A2 SS-MH

P2 MH048LD12ECC **MH FLAT TOP w/ 24" ECC Hole F/G**

P3) 24" - CASTING HEIGHT - 7"	0 lb
P2) 48" - MH FLAT TOP w/ 24" ECC Hole F/G - 12"	1561 lb
P1) 48" - MH BASE T/n - 18"	2492 lb
1) JOINT WRAP - 0.065"x6"x50' CONSEAL CS212	0 lb
1) JOINT WRAP PRIMER - CONSEAL CS-75 (1 gal.)	0 lb
1) 48" - MH INVERT CHANNEL - FULL HEIGHT	1440 lb
1) CASTING - HOE MC-315 F/C Sanitary	258 lb
1) 48" - Conseal CS-102 1.00" (Double)	0 lb
2) PSX - 12-08 NYLO	16 lb
1) MH Step ML-10-TDS-NCR - 10"	0 lb
Structure Total:	5767 lb

Structure Notes:
1. PER ASTM C478 SPECIFICATIONS.
2. CONCRETE = 4,000 PSI AT 28 DAYS.
3. CASTING BY ICAST (HOE MC-315 F/C "SANITARY").

REINFORCING PER ASTM A615 (GRADE 60).
- TOP SLAB (As .62) #5 BARS AT 6" C.C.E.W.
- RISER/WALLS (As .12)
- FLOOR (As .31) #5 BARS AT 12" C.C.E.W.

NOTES:
1. MANUFACTURED TO ASTM C-478 (LATEST REVISION).
2. CONCRETE: 4,000 PSI AT 28 DAYS.
3. REINFORCING: #5 BAR @ 6" C.C. E.W. (GRADE 60).

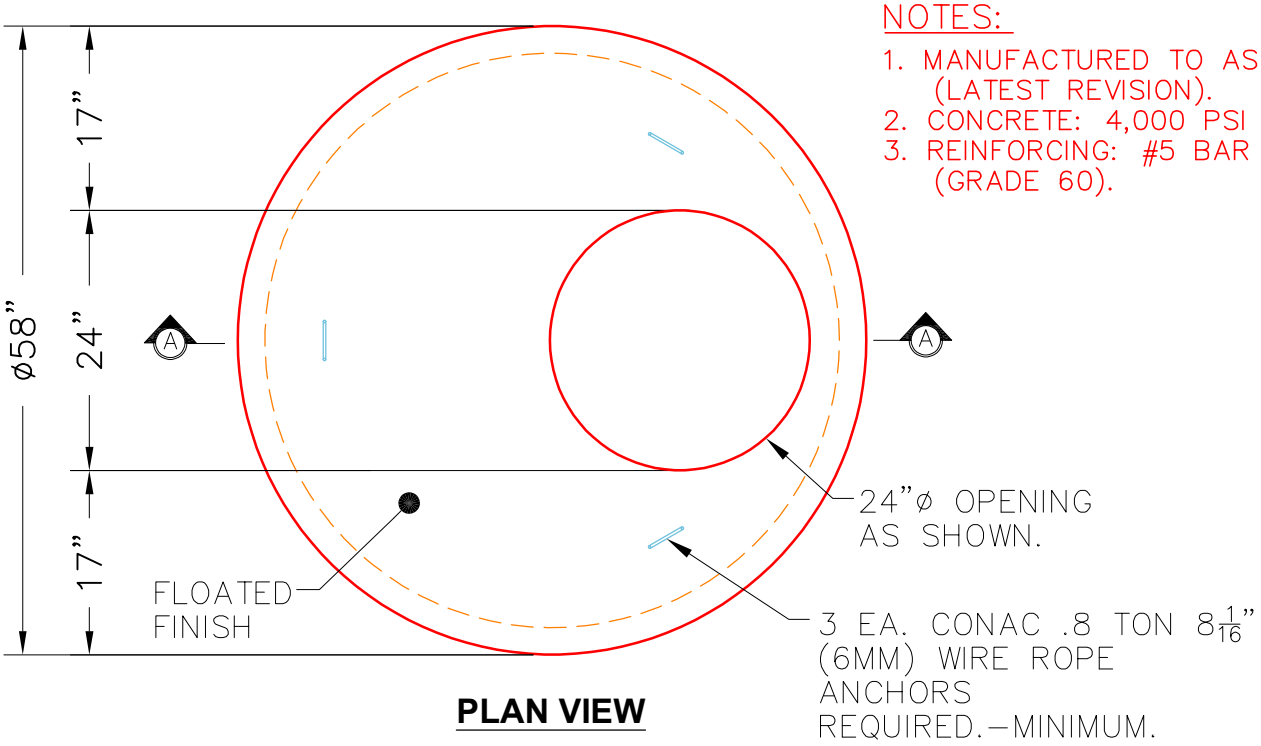

PLAN VIEW

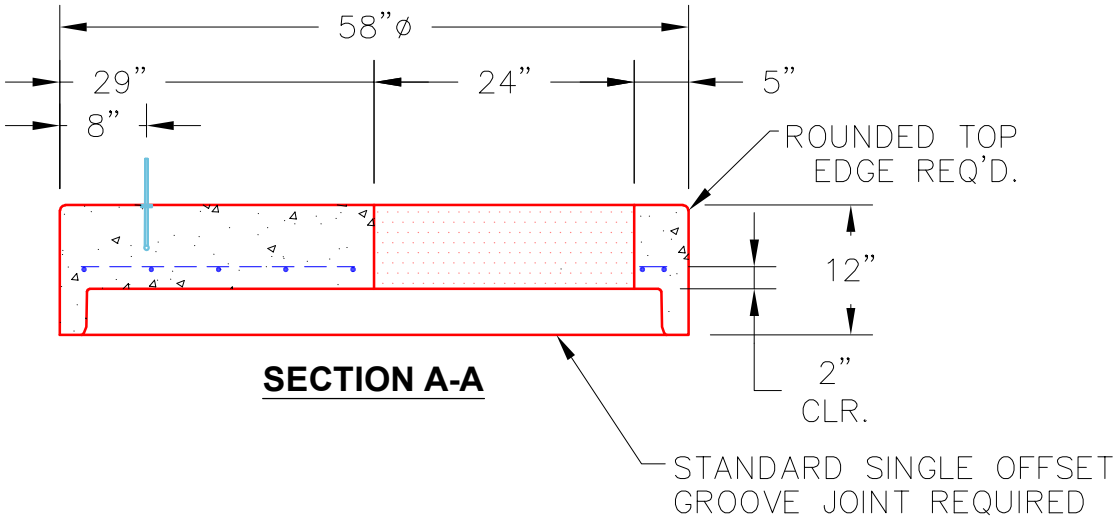

SECTION A-A

Coating (Int): Coating (Ext):	Seam Up: Flat Seam Dn: Groove	Wall Thickness: 5"	Height (Ext): 12"	Weight (Net): 1561 lb Volume (Net): 0.42cu.yd

Job Name: 26-2078 Lincoln & Coleman Street Sewer Job Location: Lawrenceburg, KY Contractor: Shouse Excavating	Plant: Beaver Dam 5/14/2026 1:16:01 PM	Tech: S. Felletter PC: C. Goff	

Structure ID: A3 SS-MH

P1 MH048BA24 MH BASE T/n

P4) 24" - CASTING HEIGHT - 7"	0 lb
P3) 24" - GRADE RING F/F - 3"	202 lb
P2) 48" - MH FLAT TOP w/ 24" ECC Hole F/G - 12"	1561 lb
P1) 48" - MH BASE T/n - 24"	2959 lb
1) JOINT WRAP - 0.065"x6"x50' CONSEAL CS212	0 lb
1) JOINT WRAP PRIMER - CONSEAL CS-75 (1 gal.)	0 lb
1) 48" - MH INVERT CHANNEL - FULL HEIGHT	1440 lb
1) CASTING - HOE MC-315 F/C Sanitary	258 lb
1) 48" - Conseal CS-102 1.00" (Double)	0 lb
2) 24" - Conseal CS-102 1.00" (Double)	0 lb
1) PSX - 12-08 NYLO	8 lb
1) MH Step ML-10-TDS-NCR - 10"	0 lb
Structure Total:	6428 lb

Rim: 813' Rim to Invert: 3.67' Slack: 0.04" Sump: 2" Step Position: 0°

Structure Notes:
1. PER ASTM C478 SPECIFICATIONS.
2. CONCRETE = 4,000 PSI AT 28 DAYS.
3. CASTING BY ICAST (HOE MC-315 F/C "SANITARY").

REINFORCING PER ASTM A615 (GRADE 60).
- TOP SLAB (As .62) #5 BARS AT 6" C.C.E.W.
- RISER/WALLS (As .12)
- FLOOR (As .31) #5 BARS AT 12" C.C.E.W.

Position	Elev	Angle	Ext. (cw)	Pipe	Pipe OD	Connector	Hole	Horz Size	Up (_)	Offset
Invert 1	809.33'	0°	0"	8" PVC SDR35	8.5"	PSX 12-08 NYLO	12"	12.129"	0"	0"
Invert 2										
Invert 3										
Invert 4										
Invert 5										
Invert 6										
Invert 7										
Invert 8										

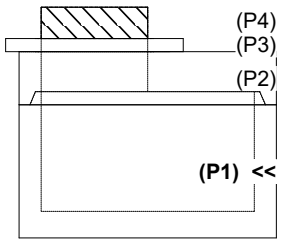

RIGHT-SIDE UP VIEW (int. dimensions)

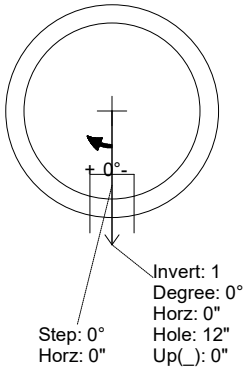

UPSIDE-DOWN VIEW (int. dimenions)

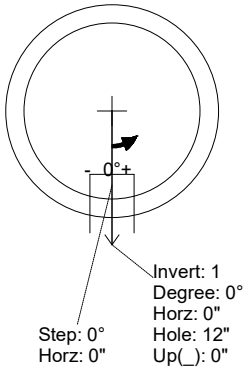

INSIDE WALL DIMENSIONS

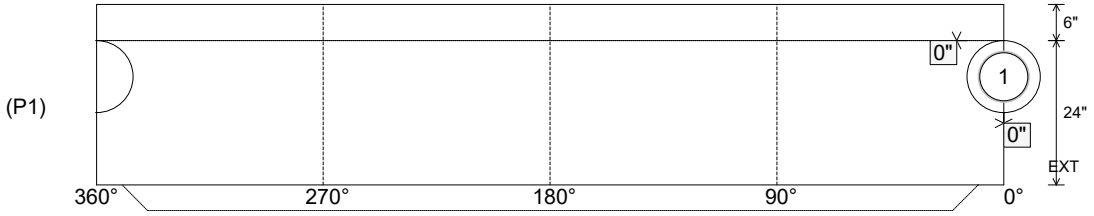

Coating (Int): Coating (Ext):	Seam Up: Tongue Seam Dn: n/a	Wall Thickness: 5" Floor Height: 6"	Height (Int): 24" Height (Ext): 30"	Weight (Net): 2959 lb Volume (Net): 0.76cu.yd

Job Name: 26-2078 Lincoln & Coleman Street Sewer Job Location: Lawrenceburg, KY Contractor: Shouse Excavating	Plant: Beaver Dam 5/14/2026 1:16:01 PM	Tech: S. Felletter PC: C. Goff	

Structure ID: A3 SS-MH

P1 MH048BA24 MH BASE T/n

P4) 24" - CASTING HEIGHT - 7"	0 lb
P3) 24" - GRADE RING F/F - 3"	202 lb
P2) 48" - MH FLAT TOP w/ 24" ECC Hole F/G - 12"	1561 lb
P1) 48" - MH BASE T/n - 24"	2959 lb
1) JOINT WRAP - 0.065"x6"x50' CONSEAL CS212	0 lb
1) JOINT WRAP PRIMER - CONSEAL CS-75 (1 gal.)	0 lb
1) 48" - MH INVERT CHANNEL - FULL HEIGHT	1440 lb
1) CASTING - HOE MC-315 F/C Sanitary	258 lb
1) 48" - Conseal CS-102 1.00" (Double)	0 lb
2) 24" - Conseal CS-102 1.00" (Double)	0 lb
1) PSX - 12-08 NYLO	8 lb
1) MH Step ML-10-TDS-NCR - 10"	0 lb
Structure Total:	6428 lb

Structure Notes:
1. PER ASTM C478 SPECIFICATIONS.
2. CONCRETE = 4,000 PSI AT 28 DAYS.
3. CASTING BY ICAST (HOE MC-315 F/C "SANITARY").

REINFORCING PER ASTM A615 (GRADE 60).
- TOP SLAB (As .62) #5 BARS AT 6" C.C.E.W.
- RISER/WALLS (As .12)
- FLOOR (As .31) #5 BARS AT 12" C.C.E.W.

Invert channel drawing
Full height invert

Rim: 813' Rim to Invert: 3.67' Slack: 0.04" Sump: 2" Step Position: 0°

Position	Elev	Angle	Ext. (cw)	Pipe	Pipe OD	Connector	Hole	Horz Size	Up (_)	Offset
Invert 1	809.33'	0°	0"	8" PVC SDR35	8.5"	PSX 12-08 NYLO	12"	12.129"	0"	0"
Invert 2										
Invert 3										
Invert 4										
Invert 5										
Invert 6										
Invert 7										
Invert 8										

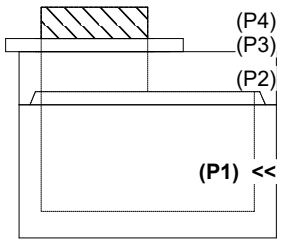

RIGHT-SIDE UP VIEW (int. dimensions)

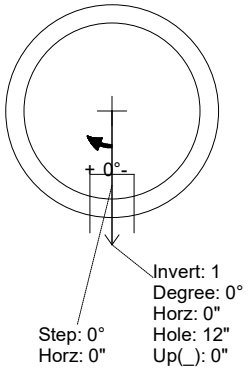

UPSIDE-DOWN VIEW (int. dimenions)

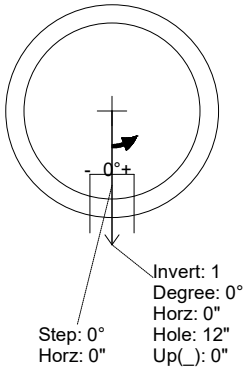

INSIDE WALL DIMENSIONS

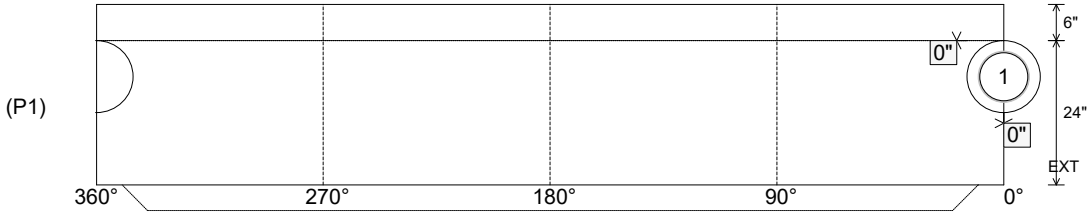

Coating (Int): Coating (Ext):	Seam Up: Tongue Seam Dn: n/a	Wall Thickness: 5" Floor Height: 6"	Height (Int): 24" Height (Ext): 30"	Weight (Net): 2959 lb Volume (Net): 0.76cu.yd

Job Name: 26-1322B - KYTC Warren Co Call 104 (261503) Job Location: Bowling Green, KY Contractor: Cumberland Pipeline LLC	Plant: 100 4/21/2026 2:25:14 PM	Tech: Jared - A PC: Celina Goff	

Structure ID: 180-85 SS-MH

P1 MH048BAVF MH BASE (08"F) T/n

P4) 24" - CASTING HEIGHT - 7"	0 lb
P3) 48" - ECC CONE w/ 24" HOLE F/G - 36"	3000 lb
P2) 48" - MH RISER T/G - 24"	1677 lb
P1) 48" - MH BASE (08"F) T/n - 34"	3603 lb
1) 48" - MH INVERT CHANNEL - FULL HEIGHT	1440 lb
1) JOINT WRAP - 0.065"x6"x50' CONSEAL CS212	0 lb
1) JOINT WRAP PRIMER - CONSEAL CS-75 (1 gal.)	0 lb
1) CASTING - HOE MC-375 F/C BGMU Sanitary	271 lb
2) 48" - Conseal CS-102 1.00" (Double)	0 lb
2) Kor-N-Seal2 - S206-28	13 lb
6) MH Step ML-10-TDS-NCR - 10"	0 lb
Structure Total:	10004 lb

Structure Notes:
1. PER KYTC & ASTM C-478 SPECIFICATIONS
2. CONCRETE: 4,000 PSI AT 28 DAYS
3. REINFORCEMENT: PER ASTM A615
4. INVERT CHANNEL REQUIRED
5. STEPS AT 0 DEGREES
6. HOE MC-375 FRAME & COVER "BGMU SANITARY" SUPPLIED BY ICAST

Rim: 477.69' Rim to Invert: 8.35' Slack: 1.2" Sump: 2" Step Position: 0

Position	Elev	Angle	Ext. (cw)	Pipe	Pipe OD	Connector	Hole	Horz Size	Up (_)	Offset
Invert 1	469.34'	0°	0"	24" PVC SDR35	24.75"	Kor-N-Seal2 S206-28	28"	29.896"	0"	0"
Invert 2	469.44'	178°	90.125"	24" PVC SDR35	24.75"	Kor-N-Seal2 S206-28	28"	29.896"	1.25"	0"
Invert 3										
Invert 4										
Invert 5										
Invert 6										
Invert 7										
Invert 8										

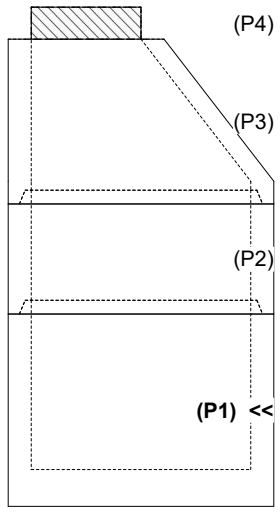

RIGHT-SIDE UP VIEW (int. dimensions)

UPSIDE-DOWN VIEW (int. dimenions)

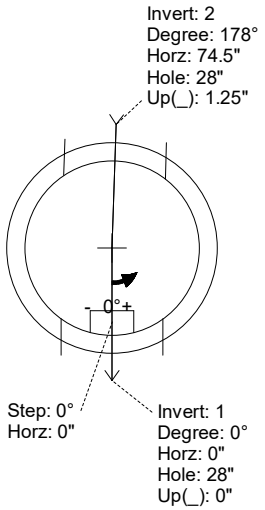

INSIDE WALL DIMENSIONS

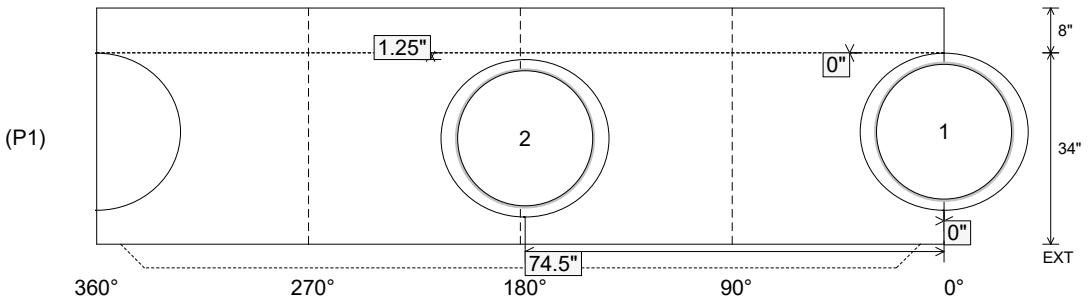

Coating (Int): Coating (Ext):	Seam Up: Tongue Seam Dn: n/a	Wall Thickness: 5" Floor Height: 8"	Height (Int): 34" Height (Ext): 42"	Weight (Net): 3603 lb Volume (Net): 0.92cu.yd

Job Name: 26-1322B - KYTC Warren Co Call 104 (261503) Job Location: Bowling Green, KY Contractor: Cumberland Pipeline LLC	Plant: 100 4/21/2026 2:25:14 PM	Tech: Jared - A PC: Celina Goff	

Structure ID: 180-85 SS-MH

P1 MH048BAVF MH BASE (08"F) T/n

P4) 24" - CASTING HEIGHT - 7"	0 lb
P3) 48" - ECC CONE w/ 24" HOLE F/G - 36"	3000 lb
P2) 48" - MH RISER T/G - 24"	1677 lb
P1) 48" - MH BASE (08"F) T/n - 34"	3603 lb
1) 48" - MH INVERT CHANNEL - FULL HEIGHT	1440 lb
1) JOINT WRAP - 0.065"x6"x50' CONSEAL CS212	0 lb
1) JOINT WRAP PRIMER - CONSEAL CS-75 (1 gal.)	0 lb
1) CASTING - HOE MC-375 F/C BGMU Sanitary	271 lb
2) 48" - Conseal CS-102 1.00" (Double)	0 lb
2) Kor-N-Seal2 - S206-28	13 lb
6) MH Step ML-10-TDS-NCR - 10"	0 lb
Structure Total:	10004 lb

Structure Notes:
1. PER KYTC & ASTM C-478 SPECIFICATIONS
2. CONCRETE: 4,000 PSI AT 28 DAYS
3. REINFORCEMENT: PER ASTM A615
4. INVERT CHANNEL REQUIRED
5. STEPS AT 0 DEGREES
6. HOE MC-375 FRAME & COVER "BGMU SANITARY" SUPPLIED BY ICAST

Rim: 477.69' Rim to Invert: 8.35' Slack: 1.2" Sump: 2" Step Position: 0

Position	Elev	Angle	Ext. (cw)	Pipe	Pipe OD	Connector	Hole	Horz Size	Up (_)	Offset
Invert 1	469.34'	0°	0"	24" PVC SDR35	24.75"	Kor-N-Seal2 S206-28	28"	29.896"	0"	0"
Invert 2	469.44'	178°	90.125"	24" PVC SDR35	24.75"	Kor-N-Seal2 S206-28	28"	29.896"	1.25"	0"
Invert 3										
Invert 4										
Invert 5										
Invert 6										
Invert 7										
Invert 8										

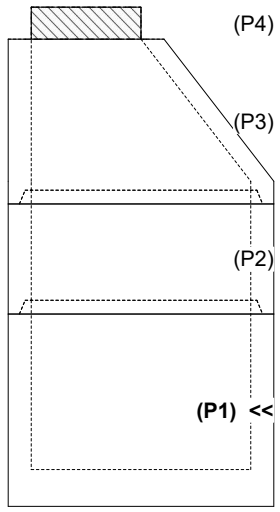

RIGHT-SIDE UP VIEW (int. dimensions)

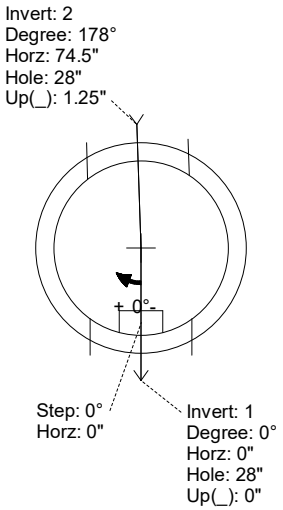

UPSIDE-DOWN VIEW (int. dimenions)

INVERT CHANNEL DRAWING

INSIDE WALL DIMENSIONS

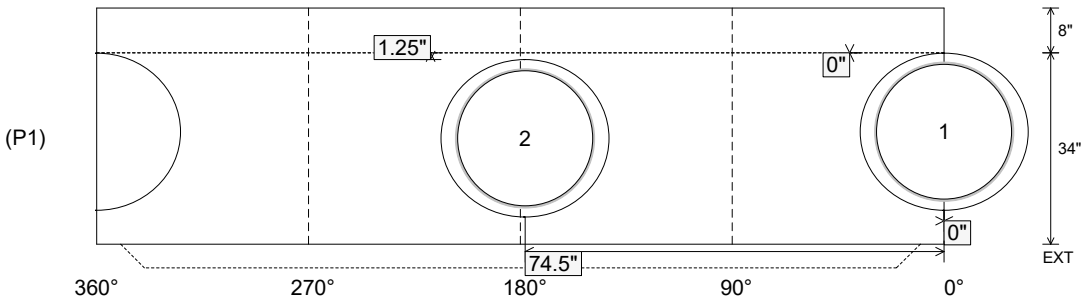

Coating (Int): Coating (Ext):	Seam Up: Tongue Seam Dn: n/a	Wall Thickness: 5" Floor Height: 8"	Height (Int): 34" Height (Ext): 42"	Weight (Net): 3603 lb Volume (Net): 0.92cu.yd

Job Name: 26-1322B - KYTC Warren Co Call 104 (261503) Job Location: Bowling Green, KY Contractor: Cumberland Pipeline LLC	Plant: 100 4/21/2026 2:25:12 PM	Tech: Jared - A PC: Celina Goff	

Structure ID: 260-81 SS-MH

P1 MH048BAVF MH BASE (08"F) T/n

P3) 24" - CASTING HEIGHT - 7"	0 lb
P2) 48" - ECC CONE w/ 24" HOLE F/G - 24"	1550 lb
P1) 48" - MH BASE (08"F) T/n - 34"	4053 lb
1) 48" - MH INVERT CHANNEL - FULL HEIGHT	1440 lb
1) JOINT WRAP - 0.065"x6"x50' CONSEAL CS212	0 lb
1) JOINT WRAP PRIMER - CONSEAL CS-75 (1 gal.)	0 lb
1) CASTING - HOE MC-375 F/C BGMU Sanitary	271 lb
1) 48" - Conseal CS-102 1.00" (Double)	0 lb
2) PSX - 12-08 NYLO	16 lb
4) MH Step ML-10-TDS-NCR - 10"	0 lb
Structure Total:	7330 lb

Structure Notes:
1. PER KYTC & ASTM C-478 SPECIFICATIONS
2. CONCRETE: 4,000 PSI AT 28 DAYS
3. REINFORCEMENT: PER ASTM A615
4. INVERT CHANNEL REQUIRED
5. STEPS AT 0 DEGREES
6. HOE MC-375 FRAME & COVER "BGMU SANITARY" SUPPLIED BY ICAST

Rim: 491.13' Rim to Invert: 5.46' Slack: 2.52" Sump: 2" Step Position: 0°

Position	Elev	Angle	Ext. (cw)	Pipe	Pipe OD	Connector	Hole	Horz Size	Up (_)	Offset
Invert 1	485.67'	0°	0"	8" PVC SDR35	8.5"	PSX 12-08 NYLO	12"	12.129"	0"	0"
Invert 2	486.96'	173°	87.625"	8" PVC SDR35	8.5"	PSX 12-08 NYLO	12"	12.129"	15.5"	0"
Invert 3										
Invert 4										
Invert 5										
Invert 6										
Invert 7										
Invert 8										

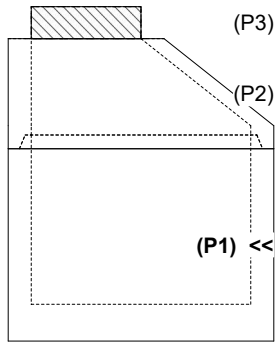

RIGHT-SIDE UP VIEW (int. dimensions)

UPSIDE-DOWN VIEW (int. dimenions)

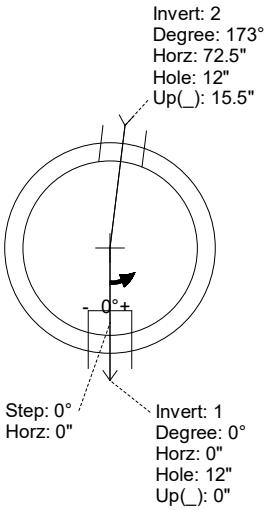

INSIDE WALL DIMENSIONS

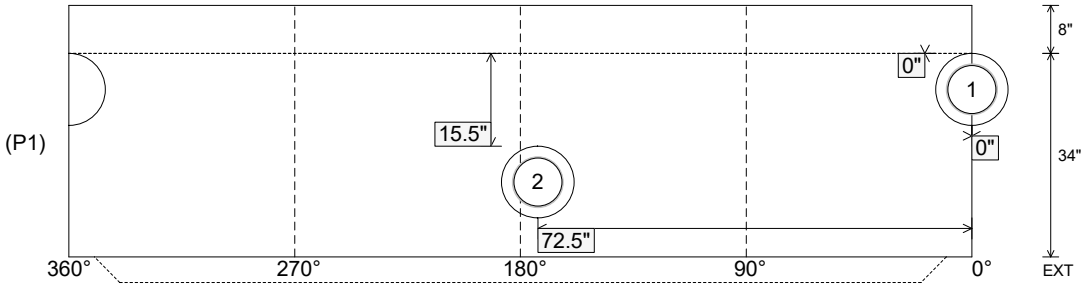

Coating (Int): Coating (Ext):	Seam Up: Tongue Seam Dn: n/a	Wall Thickness: 5" Floor Height: 8"	Height (Int): 34" Height (Ext): 42"	Weight (Net): 4053 lb Volume (Net): 1.03cu.yd

Job Name: 26-1322B - KYTC Warren Co Call 104 (261503) Job Location: Bowling Green, KY Contractor: Cumberland Pipeline LLC	Plant: 100 4/21/2026 2:25:12 PM	Tech: Jared - A PC: Celina Goff	

Structure ID: 260-81 SS-MH

P1 MH048BAVF MH BASE (08"F) T/n

P3) 24" - CASTING HEIGHT - 7"	0 lb
P2) 48" - ECC CONE w/ 24" HOLE F/G - 24"	1550 lb
P1) 48" - MH BASE (08"F) T/n - 34"	4053 lb
1) 48" - MH INVERT CHANNEL - FULL HEIGHT	1440 lb
1) JOINT WRAP - 0.065"x6"x50' CONSEAL CS212	0 lb
1) JOINT WRAP PRIMER - CONSEAL CS-75 (1 gal.)	0 lb
1) CASTING - HOE MC-375 F/C BGMU Sanitary	271 lb
1) 48" - Conseal CS-102 1.00" (Double)	0 lb
2) PSX - 12-08 NYLO	16 lb
4) MH Step ML-10-TDS-NCR - 10"	0 lb
Structure Total:	7330 lb

Structure Notes:
1. PER KYTC & ASTM C-478 SPECIFICATIONS
2. CONCRETE: 4,000 PSI AT 28 DAYS
3. REINFORCEMENT: PER ASTM A615
4. INVERT CHANNEL REQUIRED
5. STEPS AT 0 DEGREES
6. HOE MC-375 FRAME & COVER "BGMU SANITARY" SUPPLIED BY ICAST

Rim: 491.13' Rim to Invert: 5.46' Slack: 2.52" Sump: 2" Step Position: 0°

Position	Elev	Angle	Ext. (cw)	Pipe	Pipe OD	Connector	Hole	Horz Size	Up (_)	Offset
Invert 1	485.67'	0°	0"	8" PVC SDR35	8.5"	PSX 12-08 NYLO	12"	12.129"	0"	0"
Invert 2	486.96'	173°	87.625"	8" PVC SDR35	8.5"	PSX 12-08 NYLO	12"	12.129"	15.5"	0"
Invert 3										
Invert 4										
Invert 5										
Invert 6										
Invert 7										
Invert 8										

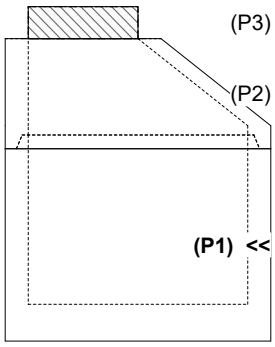

RIGHT-SIDE UP VIEW (int. dimensions)

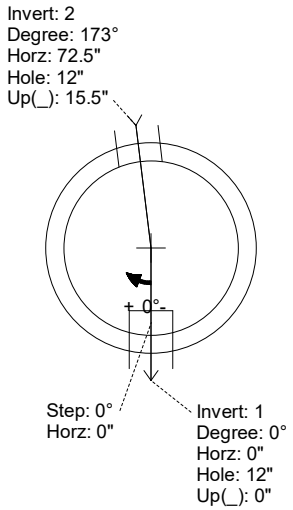

UPSIDE-DOWN VIEW (int. dimenions)

INVERT CHANNEL DRAWING

INSIDE WALL DIMENSIONS

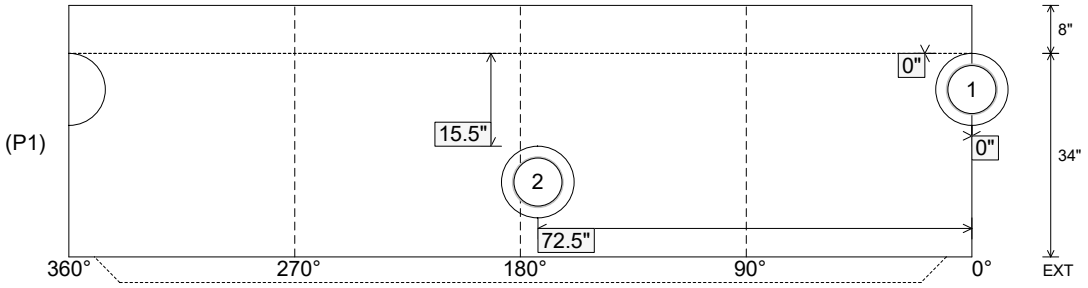

Coating (Int): Coating (Ext):	Seam Up: Tongue Seam Dn: n/a	Wall Thickness: 5" Floor Height: 8"	Height (Int): 34" Height (Ext): 42"	Weight (Net): 4053 lb Volume (Net): 1.03cu.yd

Job Name: 25-4547 - WWTP Improvements & Hydraulic Expansion Job Location: Shepherdsville, KY Contractor: Pace Contracting, LLC	Plant: 100 6/4/2026 1:36:12 PM	Tech: Jared - F PC: J Jarvis	

Structure ID: MH-2

P1 MH060BA24 MH BASE T/n

P5) 24" - CASTING HEIGHT - 7"	0 lb
P4) 48" - ECC CONE w/ 24" HOLE F/G - 42"	3200 lb
P3) 60" - MH Transition Slab 48" Hole T/G - 13"	1928 lb
P2) 60" - MH RISER Custom Ht T/G - 55"	5742 lb
P1) 60" - MH BASE T/n - 24"	5067 lb
1) Chimney Seal - Cretex Chimney Seal	10 lb
1) JOINT WRAP - 0.065"x6"x50' CONSEAL CS212	0 lb
1) JOINT WRAP PRIMER - CONSEAL CS-75 (1 gal.)	0 lb
1) 60" - MH INVERT CHANNEL - FULL HEIGHT	2692 lb
1) CASTING - HOE MC-375 F/C Sanitary	271 lb
2) 60" - Conseal CS-102 1.00" (Double)	0 lb
1) 48" - Conseal CS-102 1.00" (Double)	0 lb
1) 24" - Conseal CS-102 1.00" (Double)	0 lb
3) PSX - 12M NYLO	24 lb
6) MH Step ML-10-TDS-NCR - 10"	0 lb

Structure Total:	18933 lb

Rim: 450' Rim to Invert: 11.65' Slack: 0.804" Sump: 2.004" Step Position: 270°

Structure Notes: .
1. PER ASTM C478 SPECIFICATIONS.
2. CONCRETE = 4,000 PSI AT 28 DAYS.
3. CASTING SUPPLIED BY I-CAST (HOE MC-375 F/C SANITARY).
4. 8.5" EXTERNAL CHIMNEY SEAL BY I-CAST.
.
REINFORCING PER ASTM A615 (GRADE 60).
- CONE (As .12)
- TRANS. SLAB (As .31) #5 BARS AT 6" C.C.E.W.
- RISER/WALLS (As .18)
- FLOOR (As .37) #5 BARS AT 10" C.C.E.W.

Position	Elev	Angle	Ext. (cw)	Pipe	Pipe OD	Connector	Hole	Horz Size	Up (_)	Offset
Invert 1	438.35'	0°	0"	8" DI	9"	PSX 12M NYLO	12"	12.081"	0"	0"
Invert 2	438.45'	155°	97.375"	8" DI	9"	PSX 12M NYLO	12"	12.081"	1.25"	0"
Invert 3	438.45'	210°	132"	8" DI	9"	PSX 12M NYLO	12"	12.081"	1.25"	0"
Invert 4										
Invert 5										
Invert 6										
Invert 7										
Invert 8										

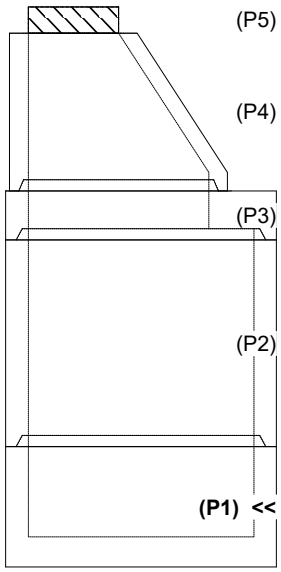

RIGHT-SIDE UP VIEW (int. dimensions)

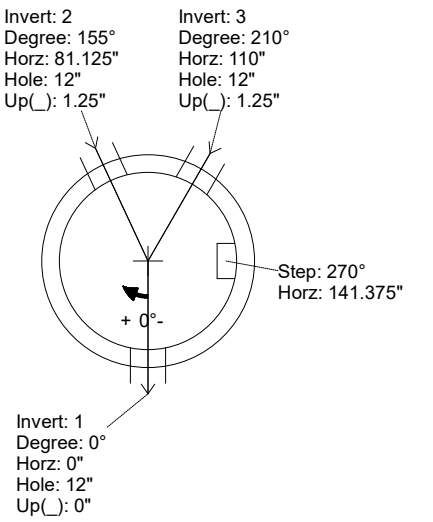

UPSIDE-DOWN VIEW (int. dimenions)

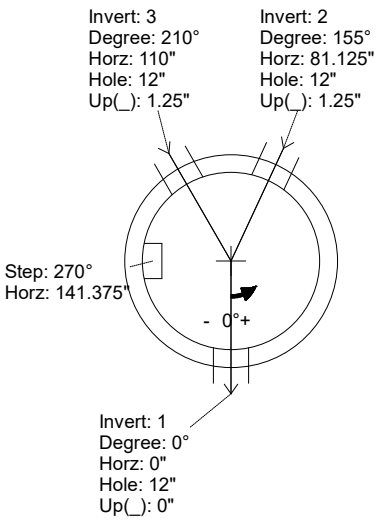

INSIDE WALL DIMENSIONS

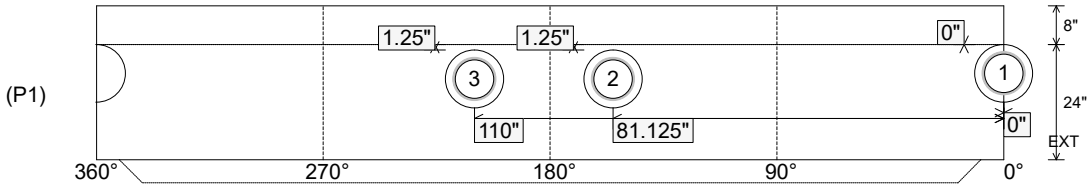

Coating (Int): Coating (Ext):	Seam Up: Tongue Seam Dn: n/a	Wall Thickness: 6" Floor Height: 8"	Height (Int): 24" Height (Ext): 32"	Weight (Net): 5067 lb Volume (Net): 1.29cu.yd

Job Name: 25-4547 - WWTP Improvements & Hydraulic Expansion Job Location: Shepherdsville, KY Contractor: Pace Contracting, LLC	Plant: 100 6/4/2026 1:36:12 PM	Tech: Jared - F PC: J Jarvis	

Structure ID: MH-2

P1 MH060BA24 MH BASE T/n

P5) 24" - CASTING HEIGHT - 7"	0 lb
P4) 48" - ECC CONE w/ 24" HOLE F/G - 42"	3200 lb
P3) 60" - MH Transition Slab 48" Hole T/G - 13"	1928 lb
P2) 60" - MH RISER Custom Ht T/G - 55"	5742 lb
P1) 60" - MH BASE T/n - 24"	5067 lb
1) Chimney Seal - Cretex Chimney Seal	10 lb
1) JOINT WRAP - 0.065"x6"x50' CONSEAL CS212	0 lb
1) JOINT WRAP PRIMER - CONSEAL CS-75 (1 gal.)	0 lb
1) 60" - MH INVERT CHANNEL - FULL HEIGHT	2692 lb
1) CASTING - HOE MC-375 F/C Sanitary	271 lb
2) 60" - Conseal CS-102 1.00" (Double)	0 lb
1) 48" - Conseal CS-102 1.00" (Double)	0 lb
1) 24" - Conseal CS-102 1.00" (Double)	0 lb
3) PSX - 12M NYLO	24 lb
6) MH Step ML-10-TDS-NCR - 10"	0 lb
Structure Total:	18933 lb

Rim: 450' Rim to Invert: 11.65' Slack: 0.804" Sump: 2.004" Step Position: 270°

Structure Notes: .
1. PER ASTM C478 SPECIFICATIONS.
2. CONCRETE = 4,000 PSI AT 28 DAYS.
3. CASTING SUPPLIED BY I-CAST (HOE MC-375 F/C SANITARY).
4. 8.5" EXTERNAL CHIMNEY SEAL BY I-CAST.
.
REINFORCING PER ASTM A615 (GRADE 60).
- CONE (As .12)
- TRANS. SLAB (As .31) #5 BARS AT 6" C.C.E.W.
- RISER/WALLS (As .18)
- FLOOR (As .37) #5 BARS AT 10" C.C.E.W.

Position	Elev	Angle	Ext. (cw)	Pipe	Pipe OD	Connector	Hole	Horz Size	Up (_)	Offset
Invert 1	438.35'	0°	0"	8" DI	9"	PSX 12M NYLO	12"	12.081"	0"	0"
Invert 2	438.45'	155°	97.375"	8" DI	9"	PSX 12M NYLO	12"	12.081"	1.25"	0"
Invert 3	438.45'	210°	132"	8" DI	9"	PSX 12M NYLO	12"	12.081"	1.25"	0"
Invert 4										
Invert 5										
Invert 6										
Invert 7										
Invert 8										

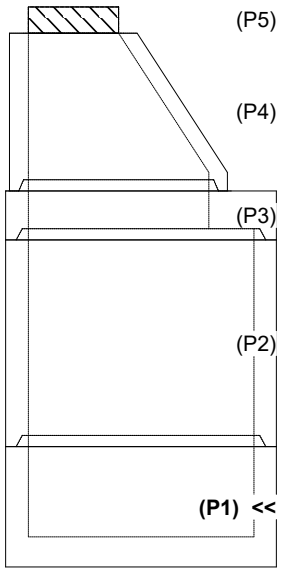

RIGHT-SIDE UP VIEW (int. dimensions)

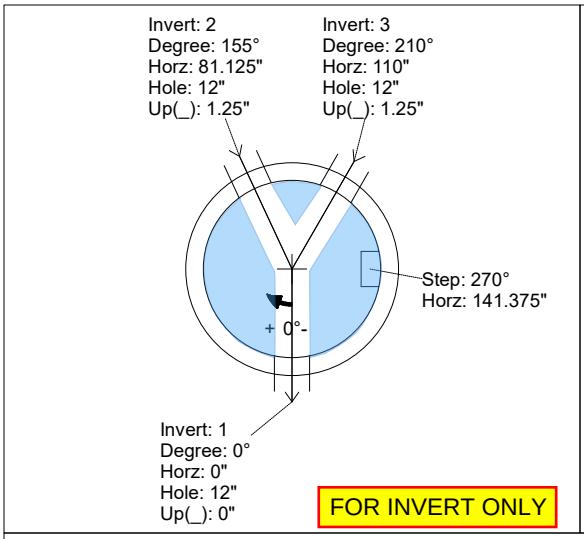

UPSIDE-DOWN VIEW (int. dimenions)

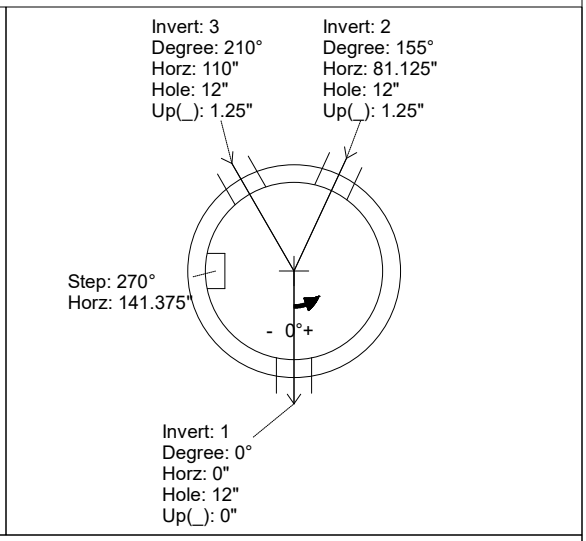

INSIDE WALL DIMENSIONS

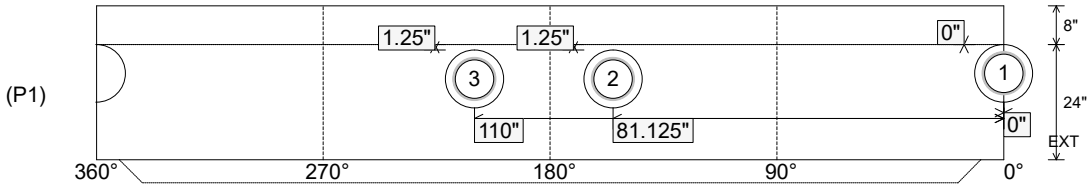

Coating (Int): Coating (Ext):	Seam Up: Tongue Seam Dn: n/a	Wall Thickness: 6" Floor Height: 8"	Height (Int): 24" Height (Ext): 32"	Weight (Net): 5067 lb Volume (Net): 1.29cu.yd

Job Name: 25-2471 - Texas Roadhouse Job Location: Danville, KY Contractor: McCain Bros Excavating LLC	Plant: 100 6/11/2026 11:36:19 AM	Tech: Jared - F PC: M. Sullivan	

Structure ID: 3

P2 MH060RSVF **MH RISER Custom Ht T/G**

P4) 24" - CASTING HEIGHT - 7"	0 lb
P3) 60" - MH FLAT TOP w/ 24" ECC Hole F/G - 13"	2869 lb
P2) 60" - MH RISER Custom Ht T/G - 31"	3236 lb
P1) 60" - MH BASE T/n - 72"	9101 lb
2) 60" - Conseal CS-102 1.00"	0 lb
1) 24" - Conseal CS-102 1.00"	0 lb
2) Hole - 30	0 lb
1) DOGHOUSE INVRTD - 30"x29"	0 lb
4) MH Step ML-10-TDS-NCR - 10"	0 lb
Structure Total:	15206 lb

Structure Notes: .
1. PER ASTM C478 SPECIFICATIONS.
2. CONCRETE = 4,000 PSI AT 28 DAYS.
3. NO INVERT CHANNEL.
4. (7" TALL CASTING BY OTHERS)

.
REINFORCING PER ASTM A615 (GRADE 60).
- TOP SLAB (As .62) #5 BARS AT 6" C.C.E.W..
- RISER/WALLS (As .18)
- FLOOR (As .37) #5 BARS AT 10" C.C.E.W.

Rim: 1036' Rim to Invert: 8.31' Slack: 0.72" Sump: 24" Step Position: 90°

Position	Elev	Angle	Ext. (cw)	Pipe	Pipe OD	Connector	Hole	Horz Size	Up (_)	Offset
Invert 1										
Invert 2										
Invert 3										
Invert 4										
Invert 5										
Invert 6										
Invert 7										
Invert 8										

RIGHT-SIDE UP VIEW (int. dimensions)

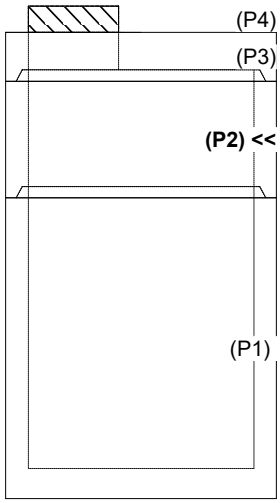

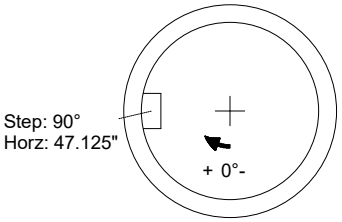

INSIDE WALL DIMENSIONS

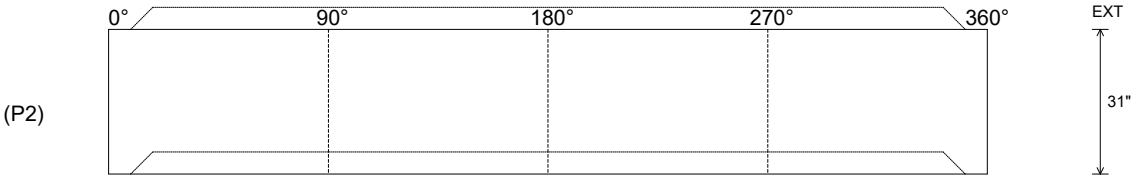

Coating (Int): Coating (Ext):	Seam Up: Tongue Seam Dn: Groove	Wall Thickness: 6" Floor Height: 0"	Height (Int): 31" Height (Ext): 31"	Weight (Net): 3236 lb Volume (Net): 0.83cu.yd

Job Name: 25-3579 - Lebanon Rd Clarks Run Trunk Sewer Ph 2 Job Location: Danville, KY Contractor: Hubert Excavating & Contracting	Plant: 100 6/7/2026 1:26:06 PM	Tech: J. Horsley PC: C. Goff	

Structure ID: MH A13

P3 MH060LD13 MH FLAT TOP w/ 24" ECC Hole F/G

P4)	24" - CASTING HEIGHT - 7"	0 lb
P3)	60" - MH FLAT TOP w/ 24" ECC Hole F/G - 13"	2869 lb
P2)	60" - MH RISER w/COATING T/G - 60"	6264 lb
P1)	60" - MH BASE w/FLANGE (08F/07EF) w/Coating T/n - 43"	7456 lb
1)	60" - MH INVERT CHANNEL - FULL HEIGHT	2692 lb
2)	JOINT WRAP - 12" WD x 060" MAC WRAP	0 lb
1)	SPECIAL EXTERNAL COATING - Carboline 300M	0 lb
1)	SECONDARY POUR - Extended Flange	0 lb
2)	60" - Conseal CS-102 1.00" (Double)	0 lb
1)	24" - Conseal CS-102 1.00" (Double)	0 lb
2)	A-Lok - 1040	2 lb
8)	MH Step ML-10-TDS-NCR - 10"	0 lb
225.5 SqFt)	Carboline Bitumastic 300M [EXT]	0 lb
	Structure Total:	19282 lb

Structure Notes:

1. PER ASTM C-478 SPECIFICATIONS
2. CONCRETE: 4,000 PSI AT 28 DAYS
3. REINFORCEMENT: PER ATTACHED DESIGN BY WINFORD A. PETRONE, PE
4. CARBOLINE 300M EXTERIOR COATING REQUIRED
5. HOE MC-375 FRAME & COVER "SANITARY" SUPPLIED BY OTHERS
6. LIFTERS: 3 EA. WRA016 CONAC WIRE ROPE ANCHORS FOR PLANT & FIELD HANDLING
7. TOP SURFACE TO RECEIVE FLOATED FINISH

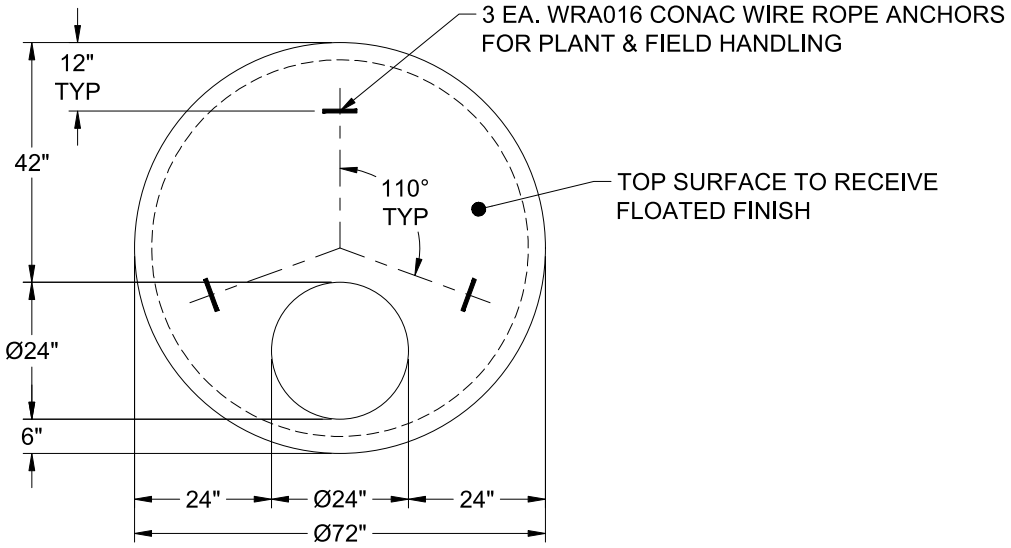

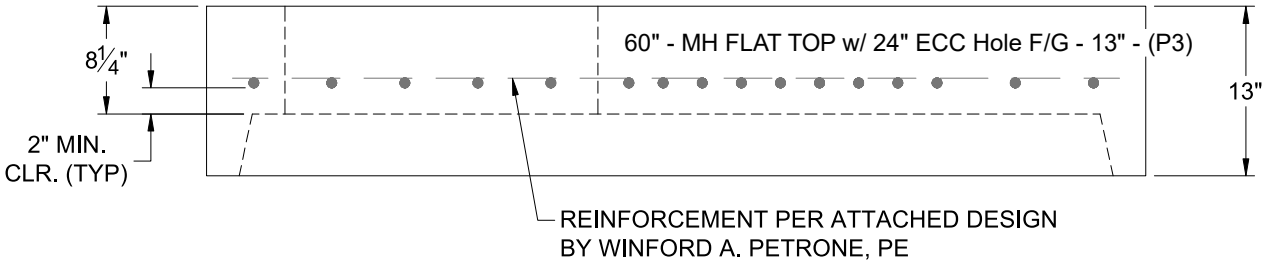

Coating (Int): Coating (Ext): Carboline Bitumastic 300M	Seam Up: Flat Seam Dn: Groove	Wall Thickness: 6"	Height (Ext): 13"	Weight (Net): 2869 lb Volume (Net): 0.73cu.yd

NOTES:

1. MIN. 28 DAY, COMPRESSIVE STRENGTH CONCRETE, F'c=4,000 PSI.
2. MIN. YIELD STRENGTH, REBAR, Fy=60,000 PSI
3. DESIGN LIVE LOAD: HS20 WHEEL LOAD, APPLIED TO TOP.
4. ASSUMED SOIL PROPERTIES: 110 PCF.
5. RISER WALLS TO BE REINFORCED IN ACCORDANCE WITH ASTM C478.
6. SEE "ICAST" WORK ORDER SUBMITTALS FOR ADDITIONAL DETAILS.

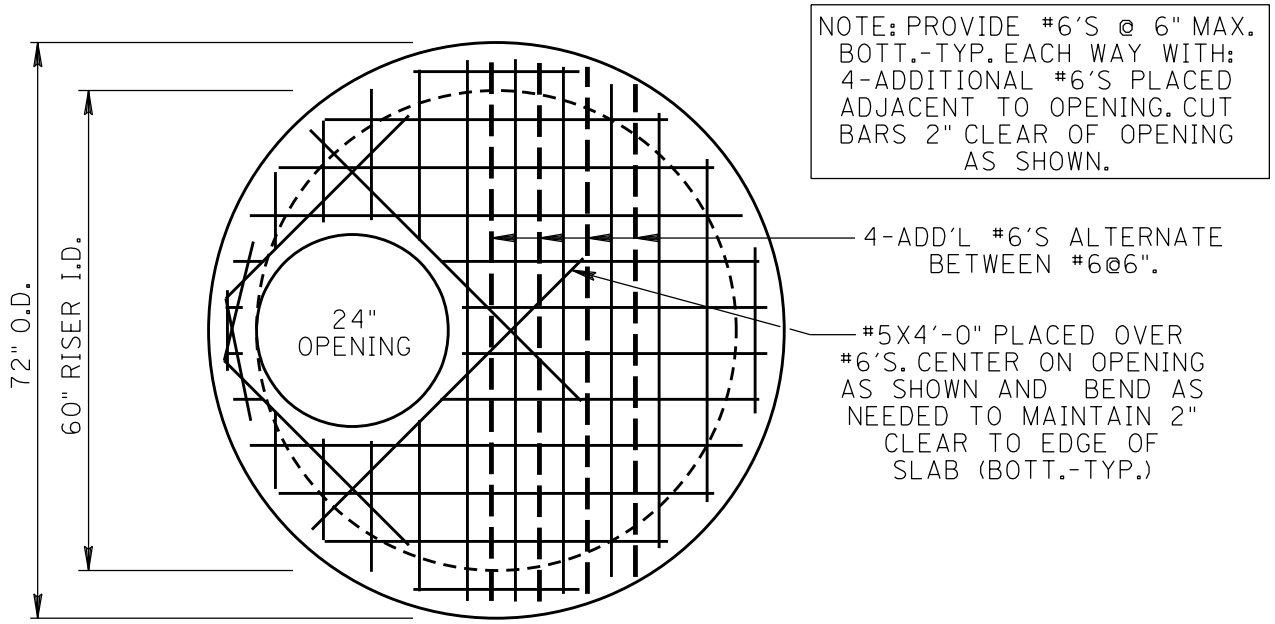

PLAN

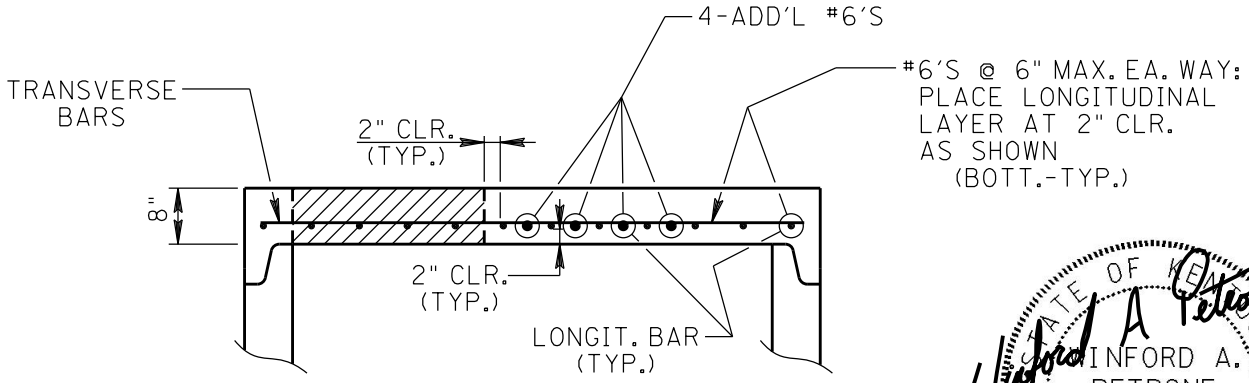

SECTION

FLAT TOP FOR 60" MANHOLES

STATE OF KENTUCKY
WINFORD A. PETRONE
24598
LICENSED PROFESSIONAL ENGINEER

Winford A Petrone
04-27-26

SK-2

FLAT-TOP FOR 60" RISERS

LEBANON RD./CLARKS RUN TRUNK SEWER, PHASE 2 DANVILLE, KY

Job Number:

25-3579

Job Name:

Lebanon Rd Clarks Run Trunk Sewer Ph 2

Structure:

MH A13

Note:

This Structure Is To Receive An External Coating of Carboline 300M (Supplied By iCast)

Job Name: 25-4547 - WWTP Improvements & Hydraulic Expansion Job Location: Shepherdsville, KY Contractor: Pace Contracting, LLC	Plant: 100 6/4/2026 1:36:33 PM	Tech: Jared - F PC: J Jarvis	

Structure ID: MH-2

P2 MH060RSVF **MH RISER Custom Ht T/G**

P5) 24" - CASTING HEIGHT - 7"	0 lb
P4) 48" - ECC CONE w/ 24" HOLE F/G - 42"	3200 lb
P3) 60" - MH Transition Slab 48" Hole T/G - 13"	1928 lb
P2) 60" - MH RISER Custom Ht T/G - 55"	5742 lb
P1) 60" - MH BASE T/n - 24"	5067 lb
1) Chimney Seal - Cretex Chimney Seal	10 lb
1) JOINT WRAP - 0.065"x6"x50' CONSEAL CS212	0 lb
1) JOINT WRAP PRIMER - CONSEAL CS-75 (1 gal.)	0 lb
1) 60" - MH INVERT CHANNEL - FULL HEIGHT	2692 lb
1) CASTING - HOE MC-375 F/C Sanitary	271 lb
2) 60" - Conseal CS-102 1.00" (Double)	0 lb
1) 48" - Conseal CS-102 1.00" (Double)	0 lb
1) 24" - Conseal CS-102 1.00" (Double)	0 lb
3) PSX - 12M NYLO	24 lb
6) MH Step ML-10-TDS-NCR - 10"	0 lb

Structure Total:	18933 lb

Rim: 450' Rim to Invert: 11.65' Slack: 0.804" Sump: 2.004" Step Position: 270°

Structure Notes: .
1. PER ASTM C478 SPECIFICATIONS.
2. CONCRETE = 4,000 PSI AT 28 DAYS.
3. CASTING SUPPLIED BY I-CAST (HOE MC-375 F/C SANITARY).
4. 8.5" EXTERNAL CHIMNEY SEAL BY I-CAST.
.
REINFORCING PER ASTM A615 (GRADE 60).
- CONE (As .12)
- TRANS. SLAB (As .31) #5 BARS AT 6" C.C.E.W.
- RISER/WALLS (As .18)
- FLOOR (As .37) #5 BARS AT 10" C.C.E.W.

Position	Elev	Angle	Ext. (cw)	Pipe	Pipe OD	Connector	Hole	Horz Size	Up (_)	Offset
Invert 1										
Invert 2										
Invert 3										
Invert 4										
Invert 5										
Invert 6										
Invert 7										
Invert 8										

RIGHT-SIDE UP VIEW (int. dimensions)

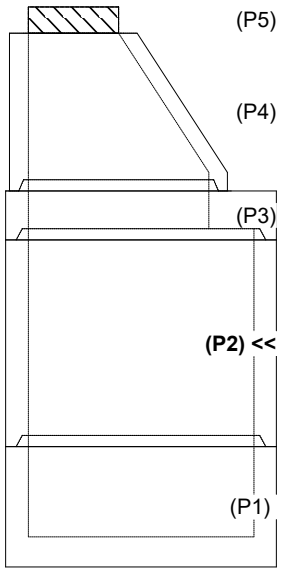

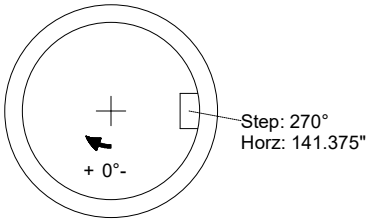

INSIDE WALL DIMENSIONS

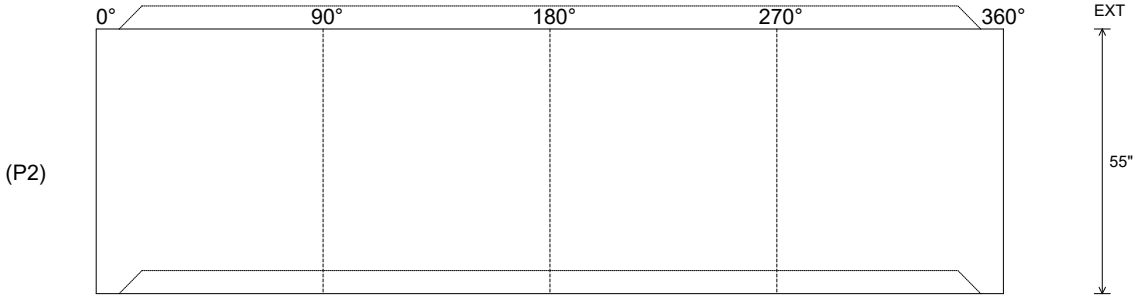

Coating (Int): Coating (Ext):	Seam Up: Tongue Seam Dn: Groove	Wall Thickness: 6" Floor Height: 0"	Height (Int): 55" Height (Ext): 55"	Weight (Net): 5742 lb Volume (Net): 1.47cu.yd

Job Name: 25-4547 - WWTP Improvements & Hydraulic Expansion Job Location: Shepherdsville, KY Contractor: Pace Contracting, LLC	Plant: 100 6/4/2026 1:36:58 PM	Tech: Jared - F PC: J Jarvis	

Structure ID: MH-2

P3 MH060TS13-48ECC **MH Transition Slab 48" Hole T/G**

P5) 24" - CASTING HEIGHT - 7"	0 lb
P4) 48" - ECC CONE w/ 24" HOLE F/G - 42"	3200 lb
P3) 60" - MH Transition Slab 48" Hole T/G - 13"	1928 lb
P2) 60" - MH RISER Custom Ht T/G - 55"	5742 lb
P1) 60" - MH BASE T/n - 24"	5067 lb
1) Chimney Seal - Cretex Chimney Seal	10 lb
1) JOINT WRAP - 0.065"x6"x50' CONSEAL CS212	0 lb
1) JOINT WRAP PRIMER - CONSEAL CS-75 (1 gal.)	0 lb
1) 60" - MH INVERT CHANNEL - FULL HEIGHT	2692 lb
1) CASTING - HOE MC-375 F/C Sanitary	271 lb
2) 60" - Conseal CS-102 1.00" (Double)	0 lb
1) 48" - Conseal CS-102 1.00" (Double)	0 lb
1) 24" - Conseal CS-102 1.00" (Double)	0 lb
3) PSX - 12M NYLO	24 lb
6) MH Step ML-10-TDS-NCR - 10"	0 lb
Structure Total:	18933 lb

Structure Notes: .
1. PER ASTM C478 SPECIFICATIONS.
2. CONCRETE = 4,000 PSI AT 28 DAYS.
3. CASTING SUPPLIED BY I-CAST (HOE MC-375 F/C SANITARY).
4. 8.5" EXTERNAL CHIMNEY SEAL BY I-CAST.
.
REINFORCING PER ASTM A615 (GRADE 60).
- CONE (As .12)
- TRANS. SLAB (As .31) #5 BARS AT 6" C.C.E.W.
- RISER/WALLS (As .18)
- FLOOR (As .37) #5 BARS AT 10" C.C.E.W.

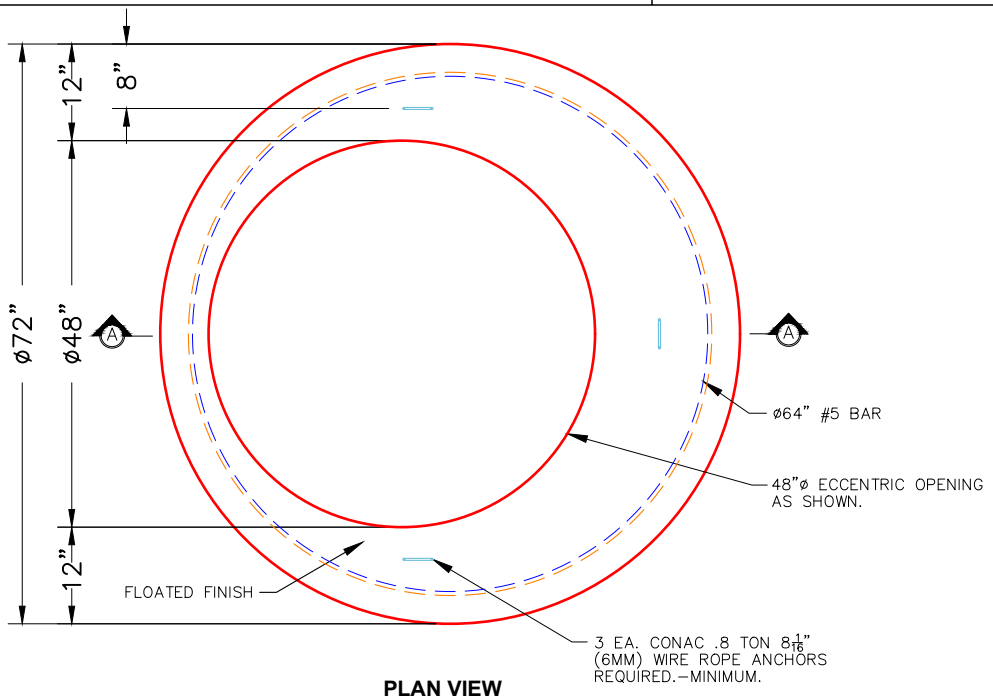

PLAN VIEW

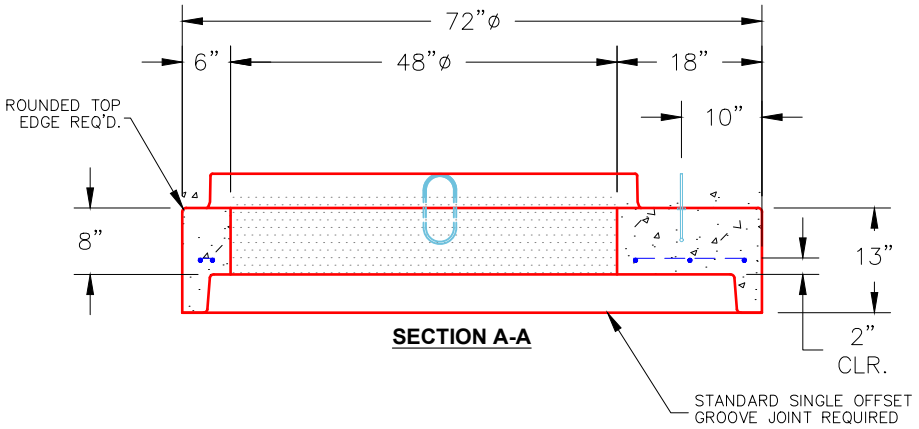

SECTION A-A

NOTES:
1. MANUFACTURED TO ASTM C–478 (LATEST REVISION).
2. CONCRETE: 4,000 PSI AT 28 DAYS.
3. REINFORCING: #5 BAR @ 6" O.C. E.W. (GRADE 60).

Coating (Int): Coating (Ext):	Seam Up: Tongue Seam Dn: Groove	Wall Thickness: 6"	Height (Ext): 13"	Weight (Net): 1928 lb Volume (Net): 0.49cu.yd

Job Name: 25-3118 - W6 Ph 2-C Force Main Improvements Job Location: Fort Mitchell, KY 41017 Contractor: Lykins Contracting	Plant: 100 3/20/2026 1:21:54 PM	Tech: J. Horsley - A PC: Celina Goff	

Structure ID: 2301566

P1 MH060BAVF **MH BASE (12"F) Custom Ht T/n**

P7) 24" - CASTING HEIGHT - 7"	0 lb
P6) 48" - CON CONE w/24" HOLE F/G - 24"	2252 lb
P5) 48" - MH RISER T/G - 60"	4192 lb
P4) 48" - MH RISER T/G - 60"	4192 lb
P3) 48" - MH RISER T/G - 60"	4192 lb
P2) 60" - MH Transition Slab 48" Hole T/G - 15"	2204 lb
P1) 60" - MH BASE (12"F) Custom Ht T/n - 66"	9635 lb
1) 60" - MH INVERT CHANNEL - FULL HEIGHT	2692 lb
1) 60" - Conseal CS-102 1.00" (Double)	0 lb
4) 48" - Conseal CS-102 1.00" (Double)	0 lb
2) A-Lok - 1235	2 lb
22) MH Step ML-10-TDS-NCR - 10"	0 lb
Structure Total:	29360 lb

Structure Notes:
1. PER ASTM C-478 SPECIFICATIONS
2. CONCRETE: 4,000 PSI AT 28 DAYS
3. REINFORCEMENT:
   - WALLS: PER ASTM A615 - DOUBLE MAT
   - FLOOR: #5 BAR @ 12" C.C. E.W. (GRADE 60) - 2" MIN. REBAR CLEARANCE (TYP)
4. INVERT CHANNEL REQUIRED
5. STEPS AT 270 DEGREES
6. 7" CASTING SUPPLIED BY OTHERS

Rim: 769.68' Rim to Invert: 24.27' Slack: 2.24" Sump: 3" Step Position: 270°

Position	Elev	Angle	Ext. (cw)	Pipe	Pipe OD	Connector	Hole	Horz Size	Up (_)	Offset
Invert 1	745.41'	0°	0"	36" PVC SDR35/F679	38.3"	A-Lok 1235	39.88"	43.623"	1.125"	0"
Invert 2	745.51'	127°	79.75"	36" PVC SDR35/F679	38.3"	A-Lok 1235	39.88"	43.623"	2.25"	0"
Invert 3										
Invert 4										
Invert 5										
Invert 6										
Invert 7										
Invert 8										

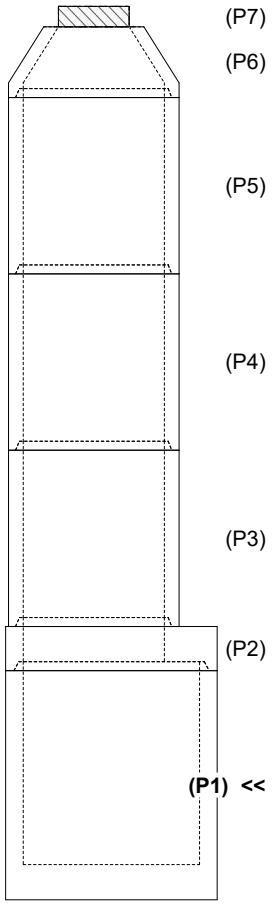

RIGHT-SIDE UP VIEW (int. dimensions)

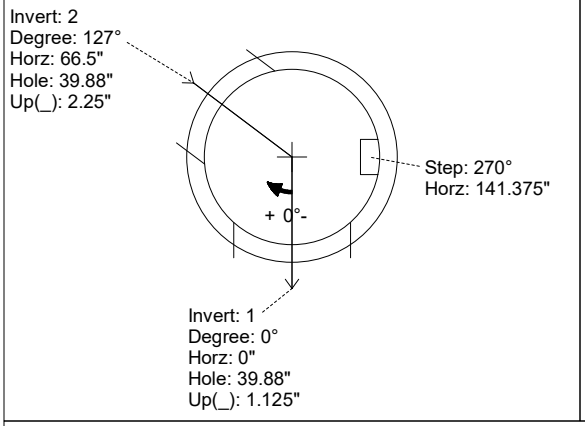

UPSIDE-DOWN VIEW (int. dimenions)

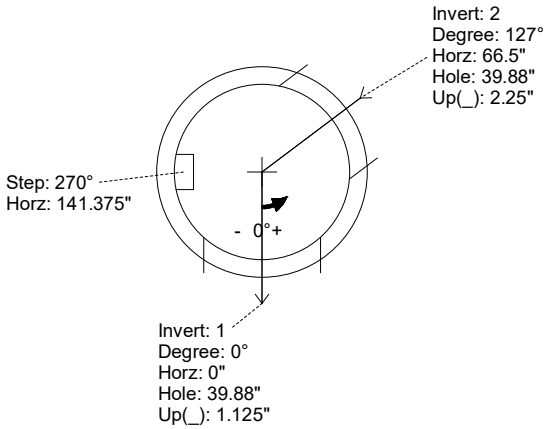

INSIDE WALL DIMENSIONS

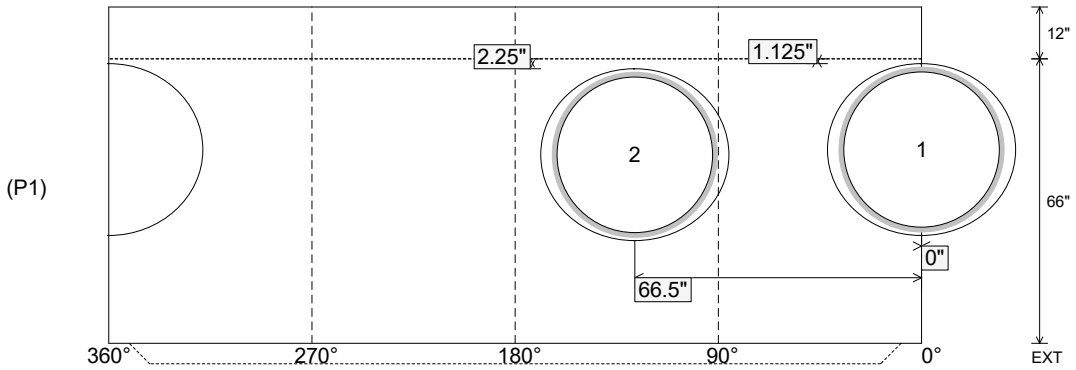

Coating (Int): Coating (Ext):	Seam Up: Tongue Seam Dn: n/a	Wall Thickness: 6" Floor Height: 12"	Height (Int): 66" Height (Ext): 78"	Weight (Net): 9635 lb Volume (Net): 2.46cu.yd

Job Name: 25-3118 - W6 Ph 2-C Force Main Improvements Job Location: Fort Mitchell, KY 41017 Contractor: Lykins Contracting	Plant: 100 3/20/2026 1:21:54 PM	Tech: J. Horsley - A PC: Celina Goff	

Structure ID: 2301566

P1 MH060BAVF **MH BASE (12"F) Custom Ht T/n**

P7) 24" - CASTING HEIGHT - 7"	0 lb
P6) 48" - CON CONE w/24" HOLE F/G - 24"	2252 lb
P5) 48" - MH RISER T/G - 60"	4192 lb
P4) 48" - MH RISER T/G - 60"	4192 lb
P3) 48" - MH RISER T/G - 60"	4192 lb
P2) 60" - MH Transition Slab 48" Hole T/G - 15"	2204 lb
P1) 60" - MH BASE (12"F) Custom Ht T/n - 66"	9635 lb
1) 60" - MH INVERT CHANNEL - FULL HEIGHT	2692 lb
1) 60" - Conseal CS-102 1.00" (Double)	0 lb
4) 48" - Conseal CS-102 1.00" (Double)	0 lb
2) A-Lok - 1235	2 lb
22) MH Step ML-10-TDS-NCR - 10"	0 lb
Structure Total:	29360 lb

Structure Notes:
1. PER ASTM C-478 SPECIFICATIONS
2. CONCRETE: 4,000 PSI AT 28 DAYS
3. REINFORCEMENT:
   - WALLS: PER ASTM A615 - DOUBLE MAT
   - FLOOR: #5 BAR @ 12" C.C. E.W. (GRADE 60) - 2" MIN. REBAR CLEARANCE (TYP)
4. INVERT CHANNEL REQUIRED
5. STEPS AT 270 DEGREES
6. 7" CASTING SUPPLIED BY OTHERS

Rim: 769.68' Rim to Invert: 24.27' Slack: 2.24" Sump: 3" Step Position: 270°

Position	Elev	Angle	Ext. (cw)	Pipe	Pipe OD	Connector	Hole	Horz Size	Up (_)	Offset
Invert 1	745.41'	0°	0"	36" PVC SDR35/F679	38.3"	A-Lok 1235	39.88"	43.623"	1.125"	0"
Invert 2	745.51'	127°	79.75"	36" PVC SDR35/F679	38.3"	A-Lok 1235	39.88"	43.623"	2.25"	0"
Invert 3										
Invert 4										
Invert 5										
Invert 6										
Invert 7										
Invert 8										

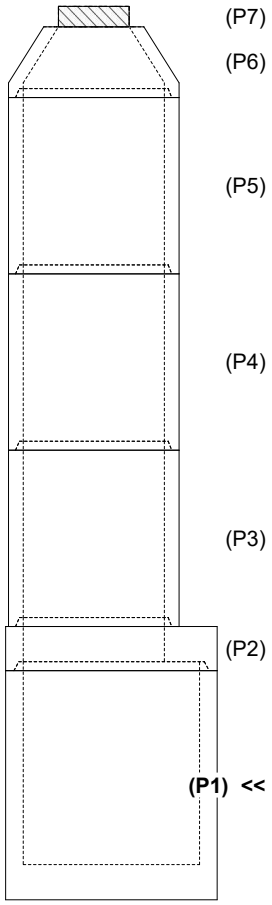

RIGHT-SIDE UP VIEW (int. dimensions)

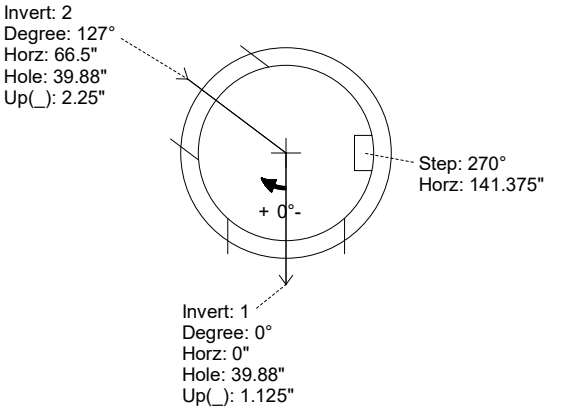

UPSIDE-DOWN VIEW (int. dimenions)

INVERT CHANNEL DRAWING

INSIDE WALL DIMENSIONS

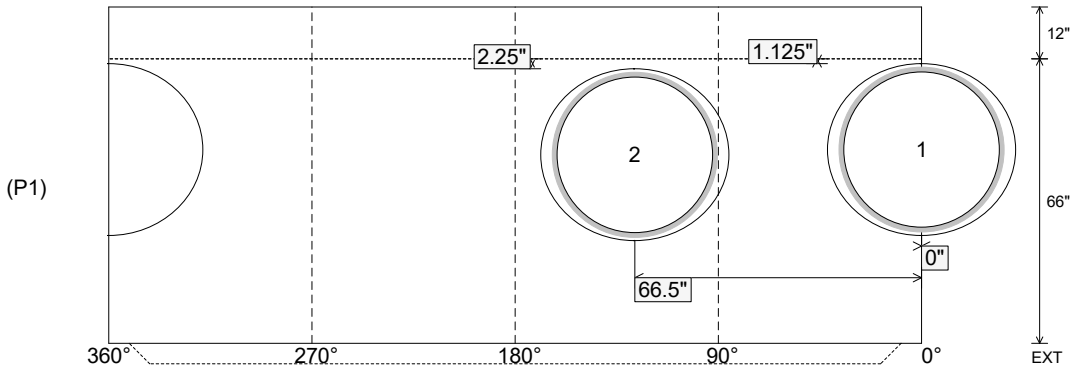

Coating (Int): Coating (Ext):	Seam Up: Tongue Seam Dn: n/a	Wall Thickness: 6" Floor Height: 12"	Height (Int): 66" Height (Ext): 78"	Weight (Net): 9635 lb Volume (Net): 2.46cu.yd

Job Name: 25-3118 - W6 Ph 2-C Force Main Improvements Job Location: Fort Mitchell, KY 41017 Contractor: Lykins Contracting	Plant: 100 3/20/2026 1:21:56 PM	Tech: J. Horsley - A PC: Celina Goff	

Structure ID: 2301567

P1 MH060BAVF **MH BASE Custom Ht T/n**

P5) 24" - CASTING HEIGHT - 7"	0 lb
P4) 48" - CON CONE w/24" HOLE F/G - 24"	2252 lb
P3) 48" - MH RISER T/G - 36"	2515 lb
P2) 60" - MH Transition Slab 48" Hole T/G - 15"	2204 lb
P1) 60" - MH BASE Custom Ht T/n - 65"	8164 lb
1) 60" - MH INVERT CHANNEL - FULL HEIGHT	2692 lb
1) 60" - Conseal CS-102 1.00" (Double)	0 lb
2) 48" - Conseal CS-102 1.00" (Double)	0 lb
2) A-Lok - 1235	2 lb
10) MH Step ML-10-TDS-NCR - 10"	0 lb
Structure Total:	17829 lb

Structure Notes:
1. PER ASTM C-478 SPECIFICATIONS
2. CONCRETE: 4,000 PSI AT 28 DAYS
3. REINFORCEMENT:
   - WALLS: PER ASTM A615 - DOUBLE MAT
   - FLOOR: #5 BAR @ 12" C.C. E.W. (GRADE 60) - 2" MIN. REBAR CLEARANCE (TYP)
4. INVERT CHANNEL REQUIRED
5. STEPS AT 270 DEGREES
6. 7" CASTING SUPPLIED BY OTHERS

Rim: 757.8' Rim to Invert: 12.24' Slack: 2.88" Sump: 3" Step Position: 270°

Position	Elev	Angle	Ext. (cw)	Pipe	Pipe OD	Connector	Hole	Horz Size	Up (_)	Offset
Invert 1	745.56'	0°	0"	36" PVC SDR35/F679	38.3"	A-Lok 1235	39.88"	43.623"	1.125"	0"
Invert 2	745.66'	187°	117.5"	36" PVC SDR35/F679	38.3"	A-Lok 1235	39.88"	43.623"	2.25"	0"
Invert 3										
Invert 4										
Invert 5										
Invert 6										
Invert 7										
Invert 8										

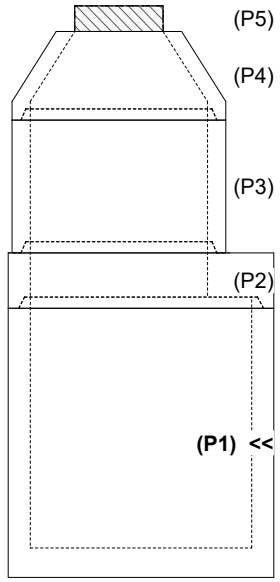

RIGHT-SIDE UP VIEW (int. dimensions)

UPSIDE-DOWN VIEW (int. dimenions)

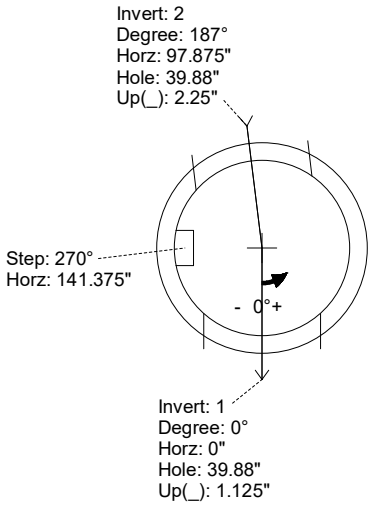

INSIDE WALL DIMENSIONS

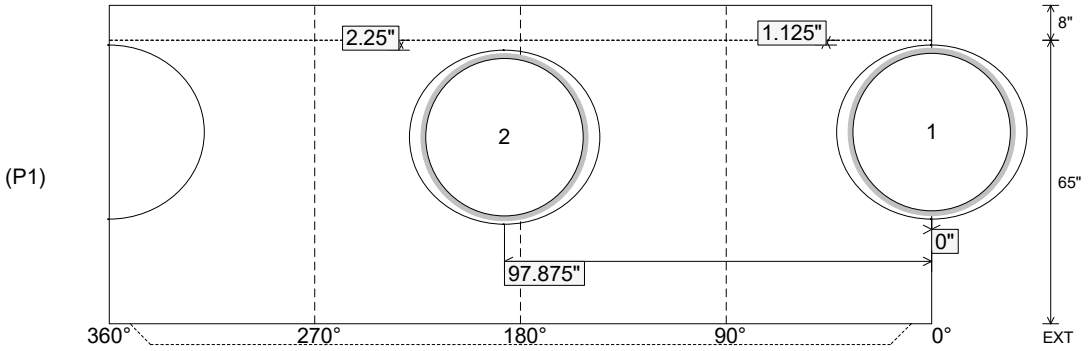

Coating (Int): Coating (Ext):	Seam Up: Tongue Seam Dn: n/a	Wall Thickness: 6" Floor Height: 8"	Height (Int): 65" Height (Ext): 73"	Weight (Net): 8164 lb Volume (Net): 2.08cu.yd

Job Name: 25-3118 - W6 Ph 2-C Force Main Improvements Job Location: Fort Mitchell, KY 41017 Contractor: Lykins Contracting	Plant: 100 3/20/2026 1:21:56 PM	Tech: J. Horsley - A PC: Celina Goff	

Structure ID: 2301567

P1 MH060BAVF **MH BASE Custom Ht T/n**

P5) 24" - CASTING HEIGHT - 7"	0 lb
P4) 48" - CON CONE w/24" HOLE F/G - 24"	2252 lb
P3) 48" - MH RISER T/G - 36"	2515 lb
P2) 60" - MH Transition Slab 48" Hole T/G - 15"	2204 lb
P1) 60" - MH BASE Custom Ht T/n - 65"	8164 lb
1) 60" - MH INVERT CHANNEL - FULL HEIGHT	2692 lb
1) 60" - Conseal CS-102 1.00" (Double)	0 lb
2) 48" - Conseal CS-102 1.00" (Double)	0 lb
2) A-Lok - 1235	2 lb
10) MH Step ML-10-TDS-NCR - 10"	0 lb
Structure Total:	17829 lb

Structure Notes:
1. PER ASTM C-478 SPECIFICATIONS
2. CONCRETE: 4,000 PSI AT 28 DAYS
3. REINFORCEMENT:
   - WALLS: PER ASTM A615 - DOUBLE MAT
   - FLOOR: #5 BAR @ 12" C.C. E.W. (GRADE 60) - 2" MIN. REBAR CLEARANCE (TYP)
4. INVERT CHANNEL REQUIRED
5. STEPS AT 270 DEGREES
6. 7" CASTING SUPPLIED BY OTHERS

Rim: 757.8' Rim to Invert: 12.24' Slack: 2.88" Sump: 3" Step Position: 270°

Position	Elev	Angle	Ext. (cw)	Pipe	Pipe OD	Connector	Hole	Horz Size	Up (_)	Offset
Invert 1	745.56'	0°	0"	36" PVC SDR35/F679	38.3"	A-Lok 1235	39.88"	43.623"	1.125"	0"
Invert 2	745.66'	187°	117.5"	36" PVC SDR35/F679	38.3"	A-Lok 1235	39.88"	43.623"	2.25"	0"
Invert 3										
Invert 4										
Invert 5										
Invert 6										
Invert 7										
Invert 8										

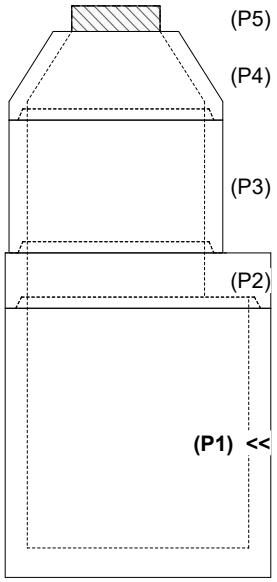

RIGHT-SIDE UP VIEW (int. dimensions)

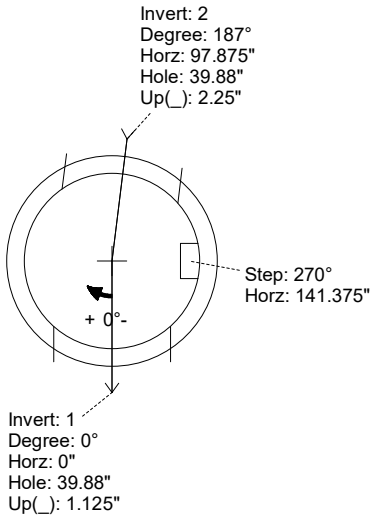

UPSIDE-DOWN VIEW (int. dimenions)

INVERT CHANNEL DRAWING

INSIDE WALL DIMENSIONS

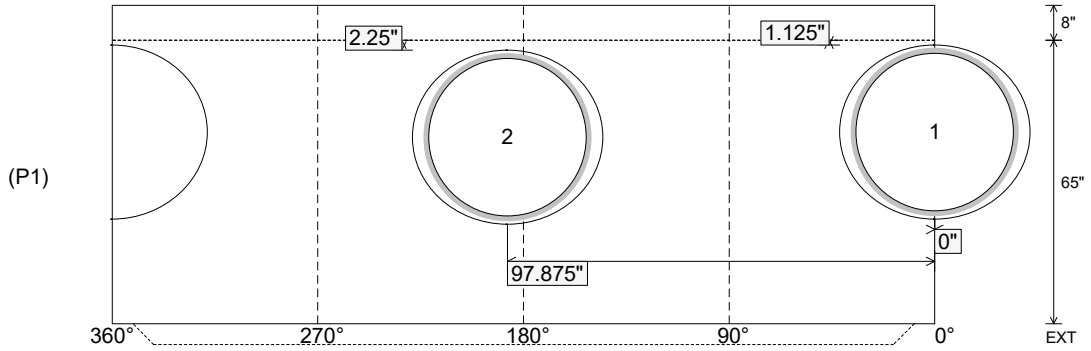

Coating (Int): Coating (Ext):	Seam Up: Tongue Seam Dn: n/a	Wall Thickness: 6" Floor Height: 8"	Height (Int): 65" Height (Ext): 73"	Weight (Net): 8164 lb Volume (Net): 2.08cu.yd

Job Name: 25-2471 - Texas Roadhouse Job Location: Danville, KY Contractor: McCain Bros Excavating LLC	Plant: 100 6/11/2026 11:35:19 AM	Tech: Jared - F PC: M. Sullivan	

Structure ID: 2

P1 MH072BA48 MH BASE T/n

P4) 24" - CASTING HEIGHT - 7"	0 lb
P3) 72" - MH FLAT LID w/24in ECC Hole F/G - 15"	5098 lb
P2) 72" - MH RISER T/G - 48"	6997 lb
P1) 72" - MH BASE T/n - 48"	9349 lb
2) 72" - Conseal CS-102 1.00"	0 lb
1) 24" - Conseal CS-102 1.00"	0 lb
2) Hole - 30	0 lb
1) Hole - 38	0 lb
8) MH Step ML-10-TDS-NCR - 10"	0 lb
Structure Total:	21444 lb

Structure Notes: .
1. PER ASTM C478 SPECIFICATIONS.
2. CONCRETE = 4,000 PSI AT 28 DAYS.
3. NO INVERT CHANNEL.
4. (7" TALL CASTING BY OTHERS)
5. (ORIFICE PLATE BY OTHERS)

.
REINFORCING PER ASTM A615 (GRADE 60).
- TOP SLAB (As .62) #5 BARS AT 6" C.C.E.W..
- RISER/WALLS (As .18)
- FLOOR (As .37) #5 BARS AT 10" C.C.E.W.

Rim: 1036.4' Rim to Invert: 9.9' Slack: 0.8" Sump: 0" Step Position: 90°

Position	Elev	Angle	Ext. (cw)	Pipe	Pipe OD	Connector	Hole	Horz Size	Up (_)	Offset
Invert 1	1026.5'	0°	0"	24" HDPE	27.8"	Hole 30	30"	30.944"	-1.875"	0"
Invert 2	1026.5'	180°	135.125"	30" HDPE	35.1"	Hole 38	38"	40.031"	-2.5"	0"
Invert 3	1026.5'	270°	202.625"	24" HDPE	27.8"	Hole 30	30"	30.944"	-1.875"	0"
Invert 4										
Invert 5										
Invert 6										
Invert 7										
Invert 8										

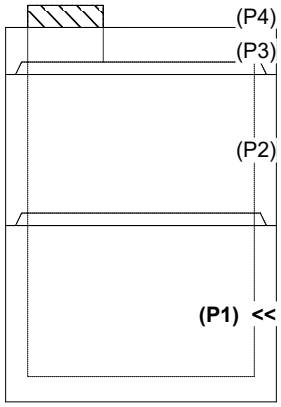

RIGHT-SIDE UP VIEW (int. dimensions)

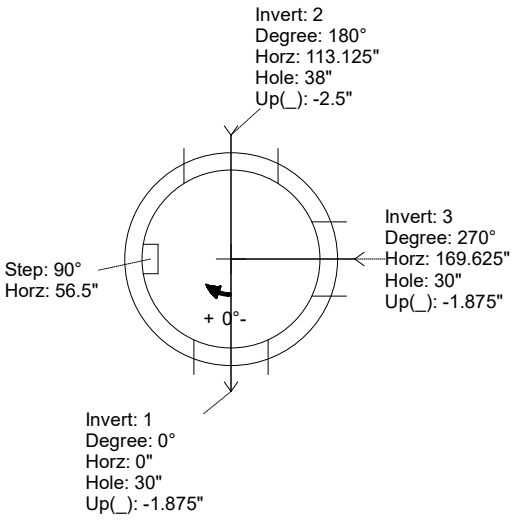

UPSIDE-DOWN VIEW (int. dimenions)

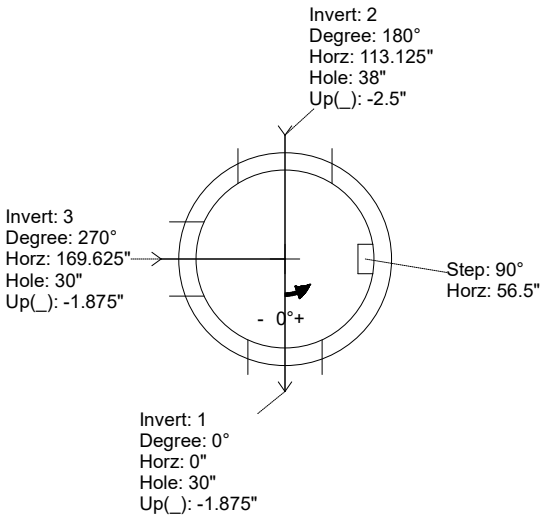

INSIDE WALL DIMENSIONS

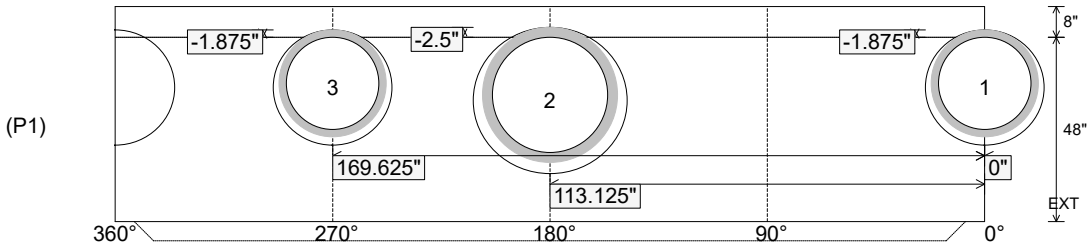

Coating (Int): Coating (Ext):	Seam Up: Tongue Seam Dn: n/a	Wall Thickness: 7" Floor Height: 8"	Height (Int): 48" Height (Ext): 56"	Weight (Net): 9349 lb Volume (Net): 2.39cu.yd

Job Name: 25-2471 - Texas Roadhouse Job Location: Danville, KY Contractor: McCain Bros Excavating LLC	Plant: 100 6/11/2026 11:36:19 AM	Tech: Jared - F PC: M. Sullivan	

Structure ID: 2

P2 MH072RS48 MH RISER T/G

P4) 24" - CASTING HEIGHT - 7"	0 lb
P3) 72" - MH FLAT LID w/24in ECC Hole F/G - 15"	5098 lb
P2) 72" - MH RISER T/G - 48"	6997 lb
P1) 72" - MH BASE T/n - 48"	9349 lb
2) 72" - Conseal CS-102 1.00"	0 lb
1) 24" - Conseal CS-102 1.00"	0 lb
2) Hole - 30	0 lb
1) Hole - 38	0 lb
8) MH Step ML-10-TDS-NCR - 10"	0 lb
Structure Total:	21444 lb

Structure Notes: .
1. PER ASTM C478 SPECIFICATIONS.
2. CONCRETE = 4,000 PSI AT 28 DAYS.
3. NO INVERT CHANNEL.
4. (7" TALL CASTING BY OTHERS)
5. (ORIFICE PLATE BY OTHERS)

.
REINFORCING PER ASTM A615 (GRADE 60).
- TOP SLAB (As .62) #5 BARS AT 6" C.C.E.W..
- RISER/WALLS (As .18)
- FLOOR (As .37) #5 BARS AT 10" C.C.E.W.

Rim: 1036.4' Rim to Invert: 9.9' Slack: 0.8" Sump: 0" Step Position: 90°

Position	Elev	Angle	Ext. (cw)	Pipe	Pipe OD	Connector	Hole	Horz Size	Up (_)	Offset
Invert 1										
Invert 2										
Invert 3										
Invert 4										
Invert 5										
Invert 6										
Invert 7										
Invert 8										

RIGHT-SIDE UP VIEW (int. dimensions)

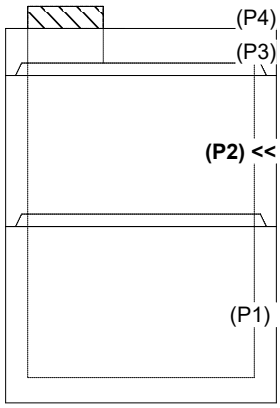

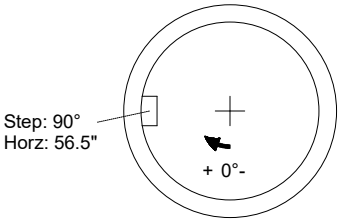

INSIDE WALL DIMENSIONS

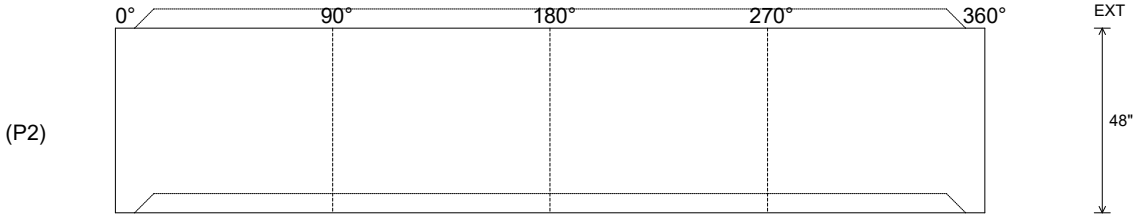

Coating (Int): Coating (Ext):	Seam Up: Tongue Seam Dn: Groove	Wall Thickness: 7" Floor Height: 0"	Height (Int): 48" Height (Ext): 48"	Weight (Net): 6997 lb Volume (Net): 1.79cu.yd

Job Name: 25-2471 - Texas Roadhouse Job Location: Danville, KY Contractor: McCain Bros Excavating LLC	Plant: 100 6/11/2026 11:35:51 AM	Tech: Jared - F PC: M. Sullivan	

Structure ID: 2

P3 MH072LD15-24ECC MH FLAT LID w/24in ECC Hole F/G

P4) 24" - CASTING HEIGHT - 7"	0 lb
P3) 72" - MH FLAT LID w/24in ECC Hole F/G - 15"	5098 lb
P2) 72" - MH RISER T/G - 48"	6997 lb
P1) 72" - MH BASE T/n - 48"	9349 lb
2) 72" - Conseal CS-102 1.00"	0 lb
1) 24" - Conseal CS-102 1.00"	0 lb
2) Hole - 30	0 lb
1) Hole - 38	0 lb
8) MH Step ML-10-TDS-NCR - 10"	0 lb
Structure Total:	21444 lb

Structure Notes: .
1. PER ASTM C478 SPECIFICATIONS.
2. CONCRETE = 4,000 PSI AT 28 DAYS.
3. NO INVERT CHANNEL.
4. (7" TALL CASTING BY OTHERS)
5. (ORIFICE PLATE BY OTHERS)

.
REINFORCING PER ASTM A615 (GRADE 60).
- TOP SLAB (As .62) #5 BARS AT 6" C.C.E.W..
- RISER/WALLS (As .18)
- FLOOR (As .37) #5 BARS AT 10" C.C.E.W.

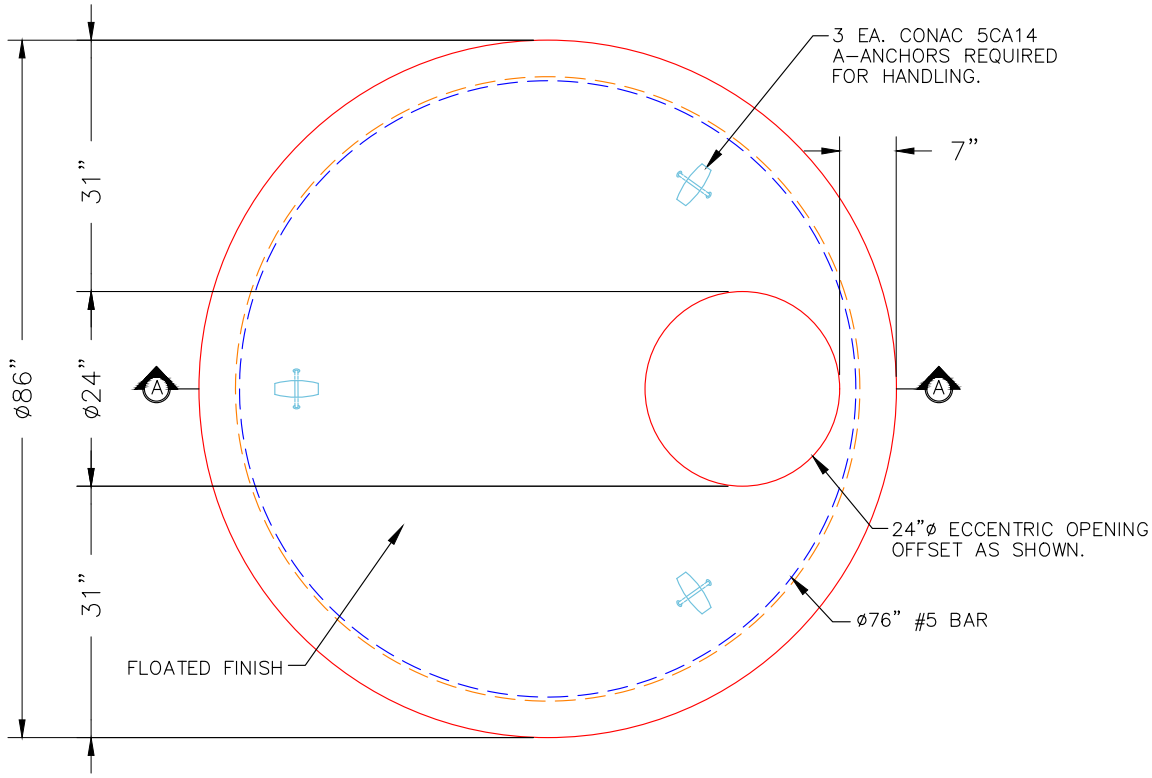

PLAN VIEW

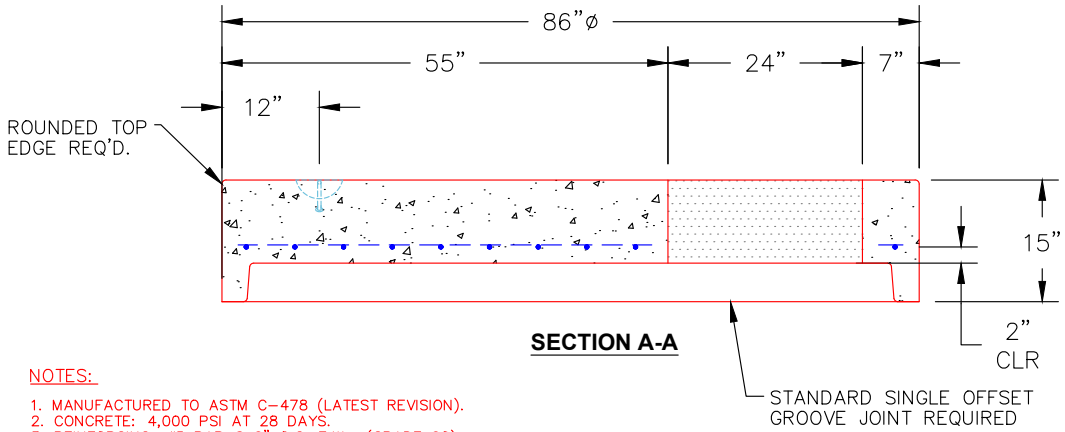

SECTION A-A

NOTES:
1. MANUFACTURED TO ASTM C-478 (LATEST REVISION).
2. CONCRETE: 4,000 PSI AT 28 DAYS.
3. REINFORCING: #5 BAR @ 6" O.C. E.W. (GRADE 60).

Coating (Int): Coating (Ext):	Seam Up: Flat Seam Dn: Groove	Wall Thickness: 7"	Height (Ext): 15"	Weight (Net): 5098 lb Volume (Net): 1.3cu.yd

Job Name: 25-3118 - W6 Ph 2-C Force Main Improvements Job Location: Fort Mitchell, KY 41017 Contractor: Lykins Contracting	Plant: 100 3/27/2026 11:40:35 AM	Tech: J. Horsley - A PC: Celina Goff	

Structure ID: 2301558

P3 MH072TS15-48ECC MH Transition Slab 48" Hole T/G

P6) 24" - CASTING HEIGHT - 7"	0 lb
P5) 48" - CON CONE w/24" HOLE F/G - 36"	2252 lb
P4) 48" - MH RISER T/G - 48"	3353 lb
P3) 72" - MH Transition Slab 48" Hole T/G - 15"	3864 lb
P2) 72" - MH RISER w/DROP T/G - 48"	6964 lb
P1) 72" - MH BASE (10"F) w/DROP Custom Ht T/n - 60"	15068 lb
1) 72" - MH INVERT CHANNEL - FULL HEIGHT	5422 lb
1) SECONDARY POUR - Add Exterior Drop to Base (P1)	3010 lb
1) SECONDARY POUR - Add Exterior Drop to Riser (P2)	2064 lb
2) 72" - Conseal CS-102 1.00" (Double)	0 lb
2) 48" - Conseal CS-102 1.00" (Double)	0 lb
2) A-Lok - 1235	2 lb
1) Drop Tee - 8" PVC	0 lb
1) Drop Elbow - 8" PVC	0 lb
17) MH Step ML-10-TDS-NCR - 10"	0 lb
Structure Total:	42000 lb

Structure Notes:

1. PER ASTM C-478 SPECIFICATIONS
2. CONCRETE: 4,000 PSI AT 28 DAYS
3. REINFORCEMENT - 2" MIN. REBAR CLEARANCE (TYP):
   - TOP MAT: #4 BAR @ 18" C.C. E.W. (GRADE 60)
   - BOTTOM MAT: #4 BAR @ 9" C.C. E.W. (GRADE 60)
4. STEPS REQUIRED
5. 7" CASTING SUPPLIED BY OTHERS
6. LIFTERS: 3 EA. WRA016 CONAC WIRE ROPE ANCHORS FOR PLANT & FIELD HANDLING
7. TOP SURFACE TO RECEIVE FLOATED FINISH

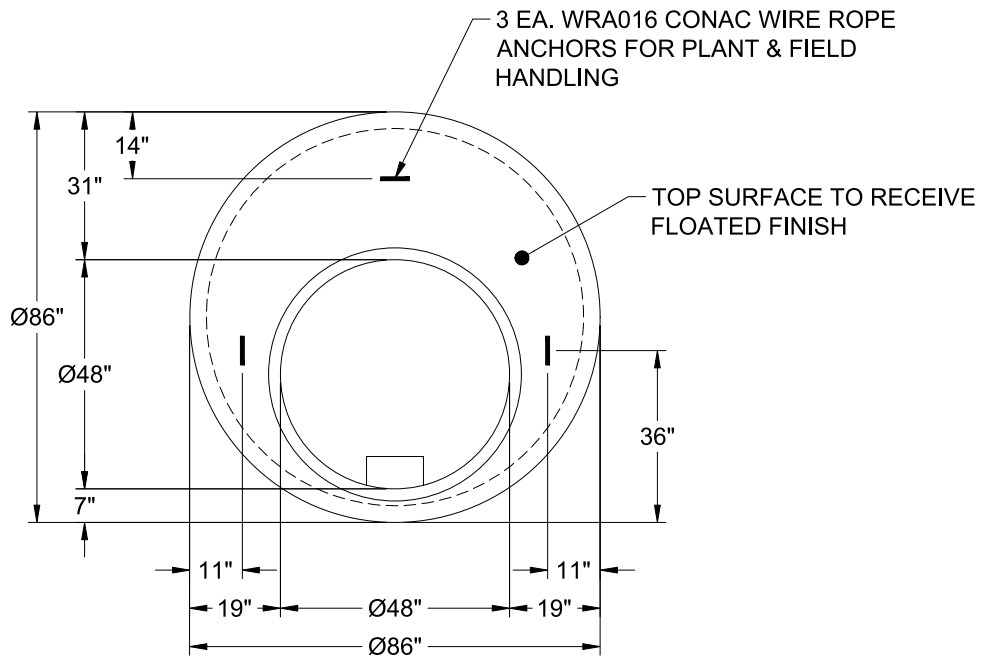

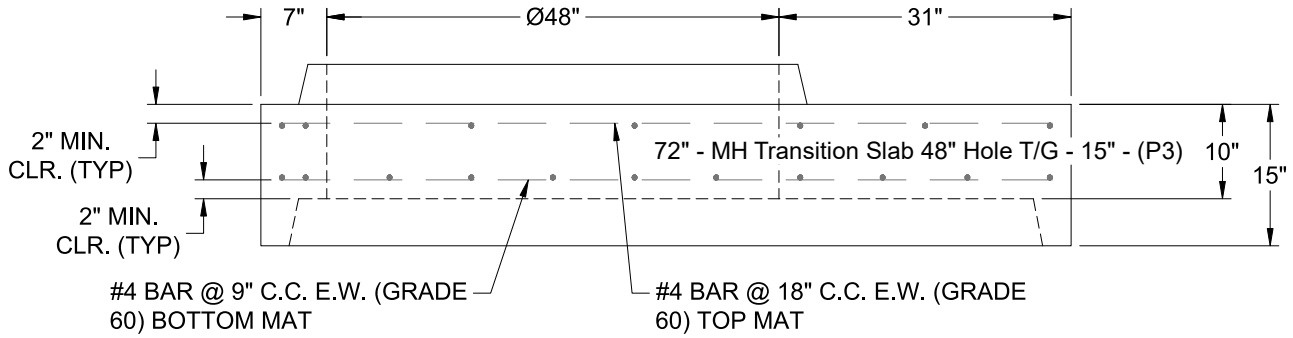

Coating (Int): Coating (Ext):	Seam Up: Tongue Seam Dn: Groove	Wall Thickness: 7"	Height (Ext): 15"	Weight (Net): 3864 lb Volume (Net): 0.99cu.yd

Job Name: 25-2471 - Texas Roadhouse Job Location: Danville, KY Contractor: McCain Bros Excavating LLC	Plant: 100 6/12/2026 3:42:05 PM	Tech: Jared - F PC: M. Sullivan	

Structure ID: 8

P1 MH084BA78 MH BASE T/n

P4) 24" - CASTING HEIGHT - 7"	0 lb
P3) 48" - ECC CONE w/ 24" HOLE F/G - 42"	3200 lb
P2) 84" - MH Trans. Slab - 48" Hole ECC T/G - 17"	5869 lb
P1) 84" - MH BASE T/n - 78"	18528 lb
1) 84" - Conseal CS-102 1.00"	0 lb
1) 48" - Conseal CS-102 1.00"	0 lb
1) 24" - Conseal CS-102 1.00"	0 lb
2) Hole - 38	0 lb
1) Hole - 24	0 lb
12) MH Step ML-10-TDS-NCR - 10"	0 lb
Structure Total:	27596 lb

Structure Notes: .
1. PER ASTM C478 SPECIFICATIONS.
2. CONCRETE = 4,000 PSI AT 28 DAYS.
3. NO INVERT CHANNEL.
4. (7" TALL CASTING BY OTHERS)
.
REINFORCING PER ASTM A615 (GRADE 60).
- CONE (As .12)
- TRANS. SLAB (As .62) #5 BARS AT 6" C.C.E.W..
- RISER/WALLS (As .24)
- FLOOR (As .47) #5 BARS AT 8" C.C.E.W.

Rim: 1037' Rim to Invert: 12.03' Slack: 0.36" Sump: 0" Step Position: 268°

Position	Elev	Angle	Ext. (cw)	Pipe	Pipe OD	Connector	Hole	Horz Size	Up (_)	Offset
Invert 1	1024.97'	0°	0"	30" HDPE	35.1"	Hole 38	38"	39.432"	-2.5"	0"
Invert 2	1024.97'	125°	109.125"	18" HDPE	21.2"	Hole 24	24"	24.339"	-1.625"	0"
Invert 3	1024.97'	176°	153.625"	30" HDPE	35.1"	Hole 38	38"	39.432"	-2.5"	0"
Invert 4										
Invert 5										
Invert 6										
Invert 7										
Invert 8										

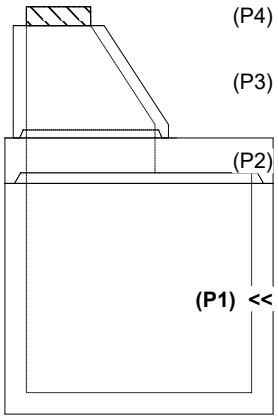

RIGHT-SIDE UP VIEW (int. dimensions)

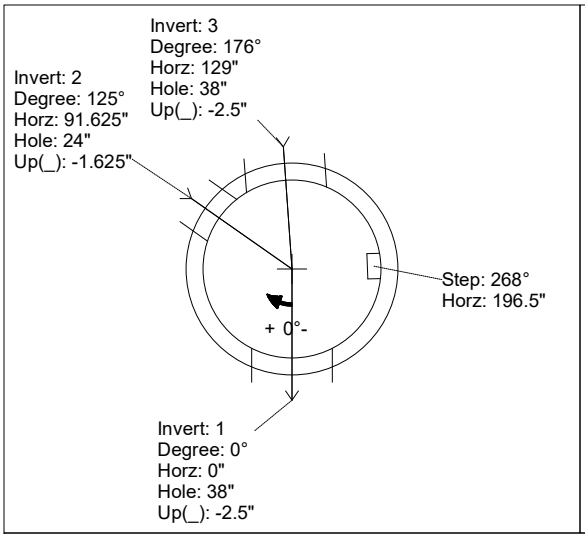

UPSIDE-DOWN VIEW (int. dimenions)

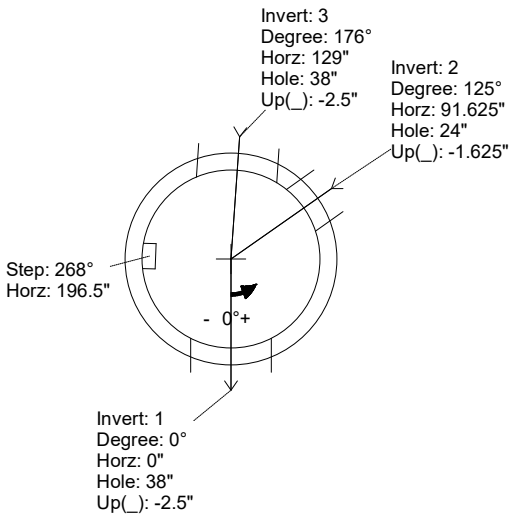

INSIDE WALL DIMENSIONS

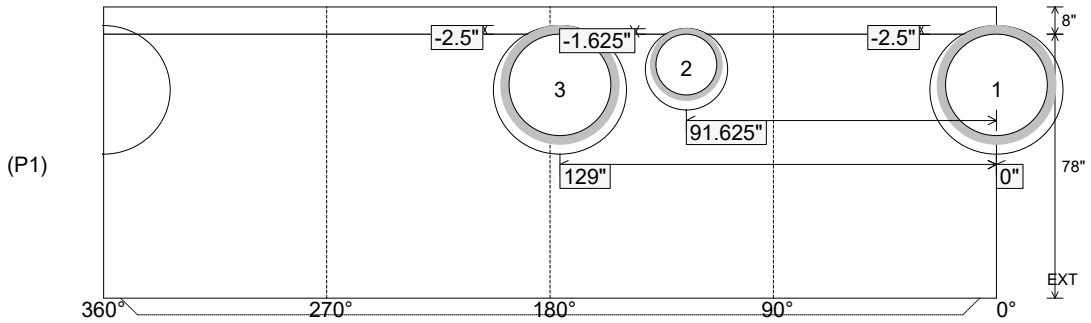

Coating (Int): Coating (Ext):	Seam Up: Tongue Seam Dn: n/a	Wall Thickness: 8" Floor Height: 8"	Height (Int): 78" Height (Ext): 86"	Weight (Net): 18528 lb Volume (Net): 4.73cu.yd

Job Name: 25-3062 Portland Bypass Job Location: Portland, TN Contractor: Scotty's Contracting & Stone, LLC	Plant: Beaver Dam 6/1/2026 9:36:08 AM	Tech: J. Coppage PC: C. Goff	

Structure ID: MD-11

P2 MH084LD145S MH FLAT TOP w/48"x48" Hole

P3) 48" x 48" - CASTING HEIGHT - 0"	0 lb
P2) 84" - MH FLAT TOP w/48"x48" Hole - 14.5"	5512 lb
P1) 84" - MH BASE Custom Ht - 69"	15431 lb
1) CASTING - JBS TYPE 39 TDOT GRATES (48" X 48")	459 lb
1) 84" - Conseal CS-102 1.00"	0 lb
1) 48" x 48" - Conseal CS-102 1.00"	0 lb
1) Hole - 54	0 lb
1) Hole - 53	0 lb
Structure Total:	21402 lb

Structure Notes:

1. PER ASTM C478 SPECIFICATIONS.
2. CONCRETE = 4,000 PSI AT 28 DAYS.
3. JBS TDOT TYPE 39 BY ICAST
4. REINFORCING PER TDOT DRAWING D-CB-39RB ASTM A615 (GRADE 60).
5. PRODUCTION TO PLACE A 4.5" DEEP X 2" WIDE RECESS IN THE TOP INSIDE OF THE 0 DEGREE AND THE 180 DEGREE WALL OF THE TOP SLAB.

NOTES:

1. MANUFACTURED TO ASTM C-478 (LATEST REVISION).
2. CONCRETE: 4,000 PSI AT 28 DAYS.
3. REINFORCING: PER TDOT DRAWING D-CB-39RB OR D-RL-3 FOR WWM OPTION.

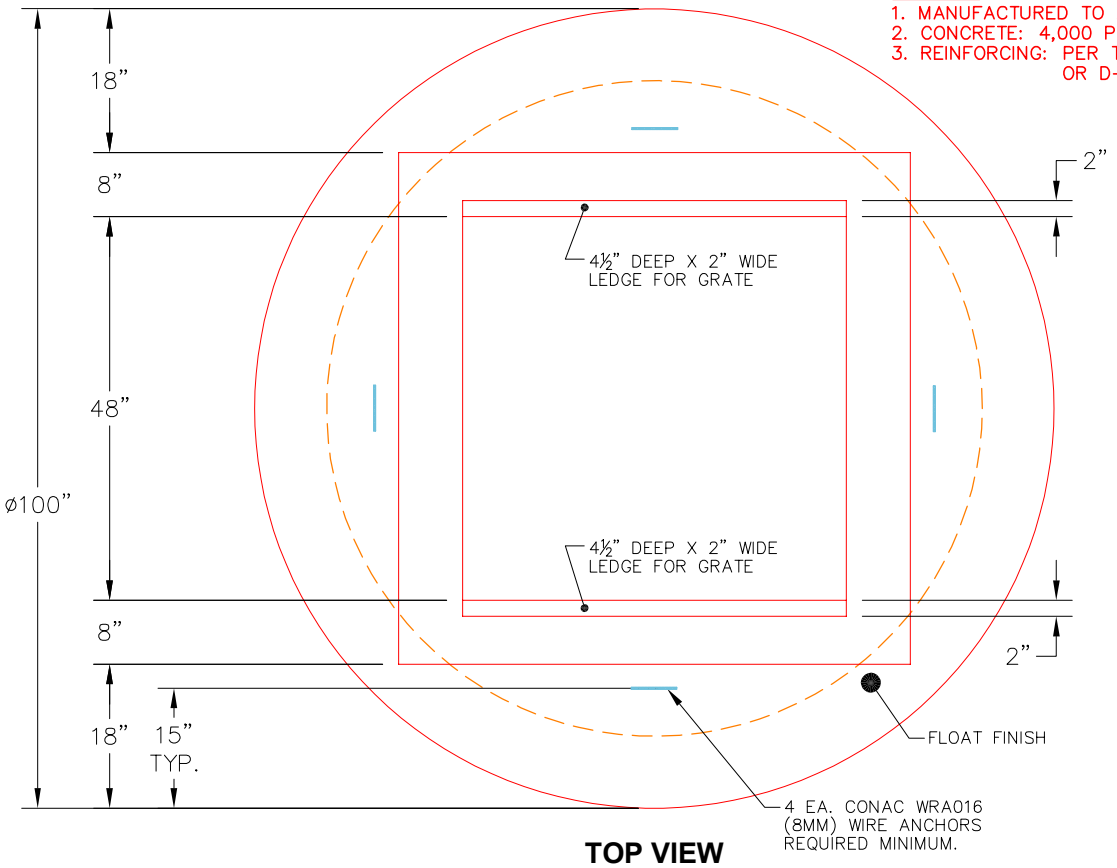

TOP VIEW

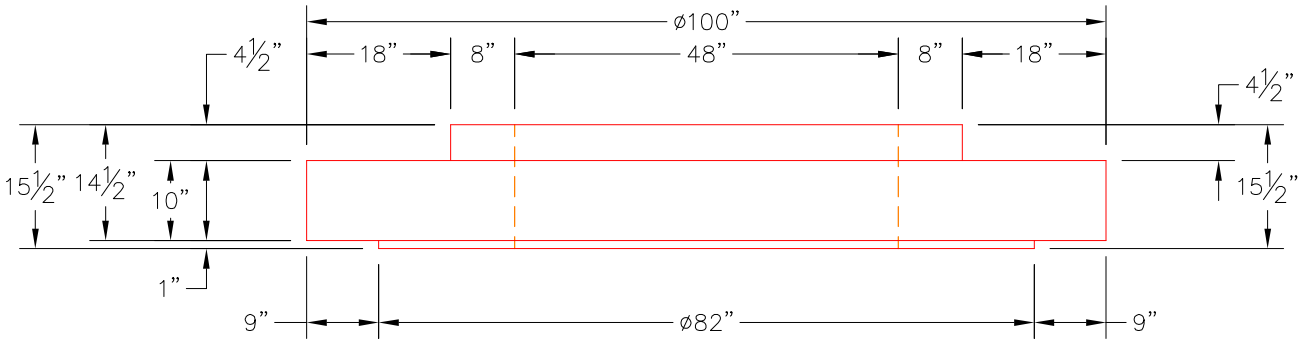

FRONT VIEW

Coating (Int): Coating (Ext):	Seam Up: Flat Seam Dn: Flat	Wall Thickness: 8"	Height (Ext): 14.5"	Weight (Net): 5512 lb Volume (Net): 1.41cu.yd

Job Name: 26-1066 - Gunning Pump Station & Force Main Job Location: Bardstown, KY Contractor: Connhurst, LLC	Plant: 100 6/2/2026 10:56:57 AM	Tech: Jared - F PC: E. Bradley	

Structure ID: W W (15)

P2 MH096RS84 MH RISER T/G

P6) 36" x 72" - HATCH (CAST FLUSH) - 0"	100 lb
P5) 96" - MH FLAT TOP w/36"x72" Hatch F/G - 17"	8315 lb
P4) 96" - MH RISER T/G - 36"	8968 lb
P3) 96" - MH RISER T/G - 96"	23694 lb
P2) 96" - MH RISER T/G - 84"	20688 lb
P1) 96" - MH BASE EF Cust. Ht. 12"F (14"EF =142"OD) T/n - 79"	35627 lb
1) JOINT WRAP - 12" WD x 096" MAC WRAP	0 lb
1) SPECIAL Internal Coating	0 lb
4) 96" - Conseal CS-231 1.00" (Double)	0 lb
1) 36" x 72" - Conseal CS-231 1.00" (Double)	0 lb
2) Hole - 12	0 lb
1) PSX - 8QRS DD	6 lb
1) PSX - 16M DD	8 lb
1) PSX - 12M DD	8 lb

Structure Total:	97415 lb

Rim: 559' Rim to Invert: 17.3' Slack: 0" Sump: 104.4" Step Position:

Structure Notes: .
1. PER ASTM C478 SPECIFICATIONS.
2. CONCRETE = 4,000 PSI AT 28 DAYS.
3. NO STEPS AND NO INVERT CHANNEL.
4. HATCH SUPPLIED BY OTHERS.
5. INSIDE OF STRUCTURE TO BE SANDBLASTED,THEN A COATING OF TNEMEC 218 TO BE APPLIED, FOLLOWED BY A COATING OF TNEMEC 434, FOLLOWED BY A COATING OF TNEMEC 435.

.
REINFORCING PER ASTM A615 (GRADE 60).
- TOP SLAB (As .31) #5 BARS AT 6" C.C.E.W.
- RISER/WALLS (As .18)
- FLOOR (As .37) #5 BARS AT 10" C.C.E.W. (DOUBLE MAT)

Position	Elev	Angle	Ext. (cw)	Pipe	Pipe OD	Connector	Hole	Horz Size	Up (_)	Offset
Invert 1										
Invert 2										
Invert 3										
Invert 4	541.7'	180°	179.125"	12" DI	13"	PSX 16M DD	16"	16.075"	18.375"	0"
Invert 5	544.21'	270°	268.625"	8" DI	9"	PSX 12M DD	12"	12.031"	48.5"	0"
Invert 6										
Invert 7										
Invert 8										

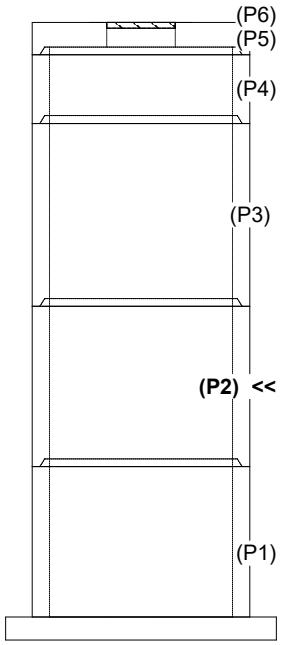

RIGHT-SIDE UP VIEW (int. dimensions)

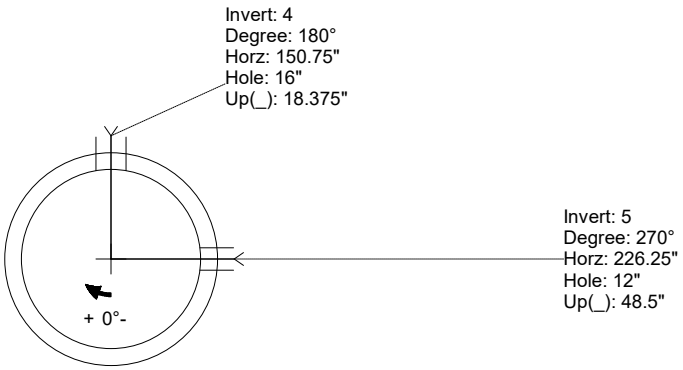

INSIDE WALL DIMENSIONS

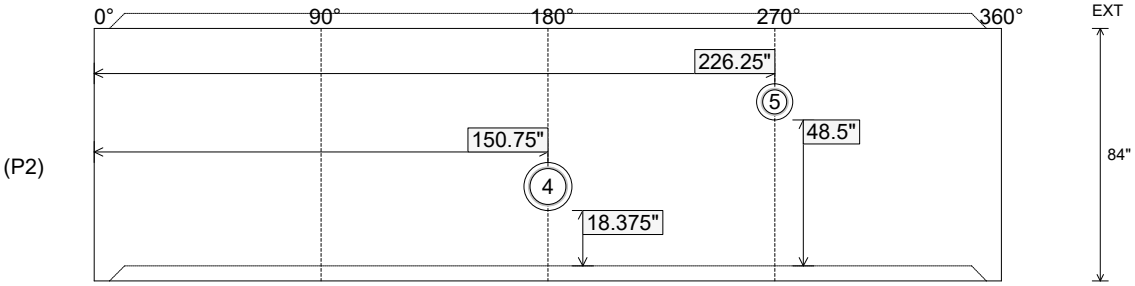

Coating (Int): Coating (Ext):	Seam Up: Tongue Seam Dn: Groove	Wall Thickness: 9" Floor Height: 0"	Height (Int): 84" Height (Ext): 84"	Weight (Net): 20688 lb Volume (Net): 5.28cu.yd

GENERAL NOTES:

1. PER SECTION 605 OF KYTC STANDARD SPECS FOR ROAD & BRIDGE CONSTRUCTION
   - KYTC STAMP REQUIRED
   - WEEP HOLES REQUIRED
2. LOAD REQUIREDMENTS: KY-HL93 (KY TABLE 1)
3. REINFORCEMENT PER ATTACHED KYTC TABLE 1
4. COVER DEPTH: 10'
5. CONCRETE: 5,000 PSI AT 28 DAYS
6. JOINT SEALANT: 1" BUTYL MASTIC (CS-102)
   EXTERIOR JOINT WRAP: 12" WIDE (CS-212)
7. WEIGHT: 8' X 6' RCBC = 3,138 LBS / LF
   (5'-9" LONG SECTION = 18,044 LBS)

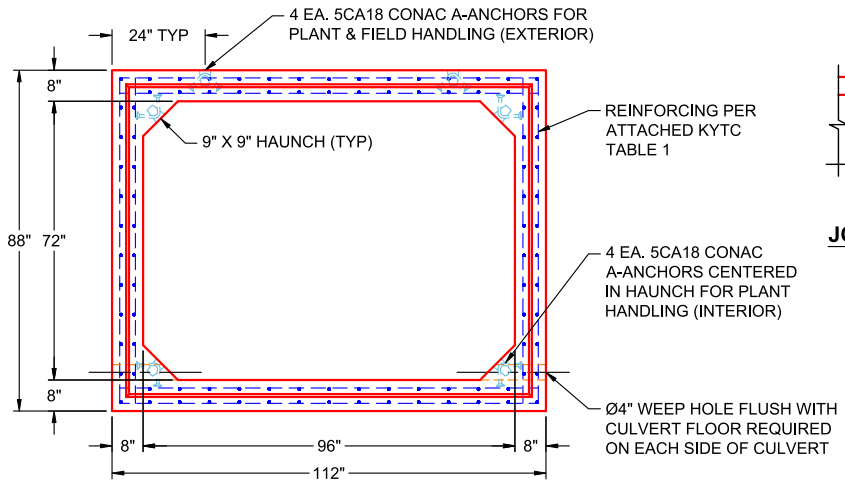

END VIEW
TYPICAL

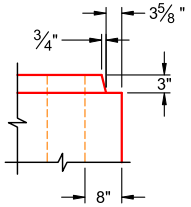

JOINT DETAIL (TYP)
NTS

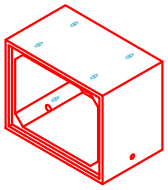

COMPONENT ISOMETRIC VIEW

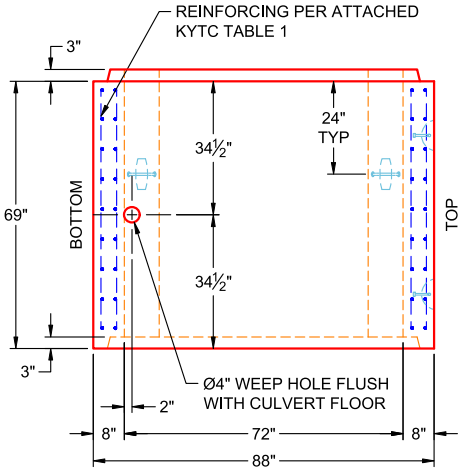

VIEW A
PC 3
(UPRIGHT IN MOLD)

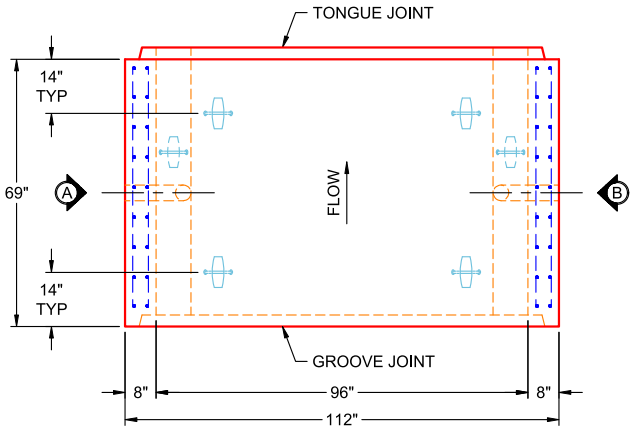

PLAN VIEW
PC 3
(UPRIGHT IN MOLD)

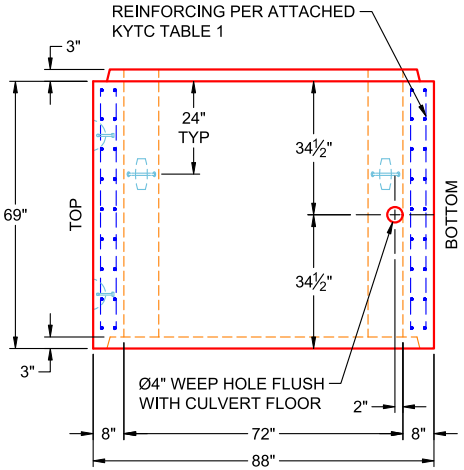

VIEW B
PC 3
(UPRIGHT IN MOLD)

PRODUCTION WORK ORDER	PRODUCT I.D.: BC096072-08WLF-9H	DESCRIPTION: 96" X 72" X 69" BOX CULVERT (8" WALLS & 9" HAUNCH)	
QUALITY CONTROL CHECKLIST	PRODUCT VIEW: RIGHT SIDE UP	CUSTOMER: JIM SMITH CONTRACTING	
☐ ALL DIMENSIONS CORRECT.	PLANT: BEAVER DAM, KY	PROJECT: KYTC MCCRACKEN CO. CALL 200 (ID 241301)	
☐ LIFTERS INSTALLED INSIDE.	WEIGHT: 18,044 LBS	STRUCTURE: ST. 43+62 (PC 3)	
☐ RECESS WITH HAUNCHES CORRECT.	TOP SECTION JOINT: TONGUE	ORDER NO: 24-1643B	
☐ REINFORCING CORRECT.	BASE SECTION JOINT: GROOVE	PE: J.H. ROSS	DRAWING: K. CARDWELL
☐ SURFACE QUALITY ACCEPTABLE.	QC CHECK INITIALS:	DATE: 05/28/26	SCALE: NTS / PG. 1 OF 1
☐ LIFTERS INSTALLED OUTSIDE.			
☐ PRODUCT SQUARE.			

THIS DRAWING IS THE PROPERTY OF INFRASTRUCTURE PRECAST, INC. ANY USE OR DUPLICATION OF THIS DRAWING WITHOUT PRIOR AUTHORIZATION IS STRICTLY PROHIBITED.

Job Name: 24-1643B - KYTC McCracken Co. Call 200 (ID 241301)
Job Location: Paducah, KY
Contractor: Jim Smith Contracting Co, LLC

Structure ID: St. 43+62 (PC 3)

P1 BC096072-08WLF-9HC BOX CULVERT (08W/08F/08T) G/T

Plant: 100
5/28/2026 7:51:15 AM
Tech: J. Horsley
PC: C. Goff

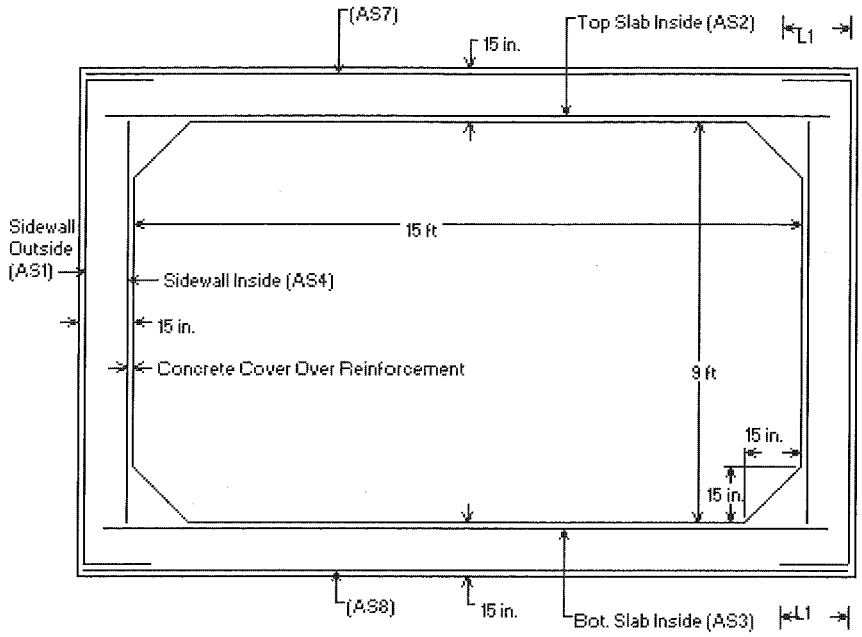

* <L1> is Splice Length
* (AS7) is Top Slab Outside
* (AS8) is Bottom Slab Outside
* See Box Culvert Design Summary Sheet for transverse and distribution reinforcement, as required.
* For sidewall thicknesses of 6 in. and above, extend AS2 and AS3 a min. of 4 in. beyond the inside face of the sidewall. For thicknesses less than 6 in., extend AS2 and AS3 at least to within 1-1/2 in. of the outside face of the sidewall.

Notes:

1) Other reinforcement schemes that provide the required reinforcement areas at all locations identified in the program output are acceptable.
2) Longitudinal reinforcement is not shown for clarity, see AASHTO M259 for longitudinal reinforcement and for additional requirements.

KY Table 1

Precast Culvert KYHL-93 Design Table

	Design Earth Cover, ft	As1	As2	As3	As4	As7	As8	As5	As6
8x6x8	0<2	0.267	0.536	0.382	0.192	0.192	0.192	0.192	0.192
	2<3	0.266	0.458	0.382	0.192	0.192	0.192	0.192	0.192
	3-5	0.237	0.392	0.359	0.192	0.192	0.192		
	10	0.244	0.365	0.38	0.192	0.192	0.192		
	15	0.321	0.489	0.505	0.192	0.192	0.192		
	20	0.408	0.627	0.644	0.192	0.192	0.192		
	25	0.502	0.774	0.791	0.192	0.192	0.192		
	30	0.602	0.928	0.946	0.192	0.192	0.192		
	35	0.708	1.089	1.108	0.192	0.192	0.192		

	Design Earth Cover, ft	As1	As2	As3	As4	As7	As8	As5	As6
8x7x8	0<2	0.245	0.557	0.403	0.192	0.192	0.192	0.197	0.192
	2<3	0.243	0.479	0.403	0.192	0.192	0.192	0.192	0.192
	3-5	0.215	0.409	0.378	0.192	0.192	0.192		
	10	0.225	0.378	0.396	0.192	0.192	0.192		
	15	0.295	0.507	0.526	0.192	0.192	0.192		
	20	0.374	0.651	0.671	0.192	0.192	0.192		
	25	0.459	0.804	0.825	0.192	0.192	0.192		
	30	0.549	0.965	0.987	0.192	0.192	0.192		
	35	0.644	1.134	1.157	0.192	0.192	0.192		

	Design Earth Cover, ft	As1	As2	As3	As4	As7	As8	As5	As6
8x8x8	0<2	0.226	0.575	0.42	0.192	0.192	0.192	0.203	0.192
	2<3	0.224	0.494	0.42	0.192	0.192	0.192	0.192	0.192
	3-5	0.201	0.423	0.393	0.192	0.192	0.192		
	10	0.211	0.386	0.407	0.192	0.192	0.192		
	15	0.276	0.518	0.54	0.192	0.192	0.192		
	20	0.349	0.665	0.688	0.192	0.192	0.192		
	25	0.427	0.822	0.846	0.192	0.192	0.192		
	30	0.51	0.988	1.013	0.192	0.192	0.192		

Default Configuration (page 1)

Default Parameters

Data Directory: c:

Jeremiah.Littleton
Documents
BOXCAR3.1

○ SI Unit File ◉ Customary US Unit File

Section Length 8 ft

Box Geometry

	SPAN < / ft				SPAN > / ft			
Top Slab Thickness	{Span/	12	+ 1 }	in.	{Span/	12	+ 0 }	in.
Bottom Slab Thickness	{Span/	12	+ 1 }	in.	{Span/	12	+ 0 }	in.
Sidewall Thickness	{Span/	12	+ 1 }	in.	{Span/	12	+ 0 }	in.
Horizontal Haunch Length	{Span/	12	+ 1 }	in.	{Span/	12	+ 0 }	in.
Vertical Haunch Length	{Span/	12	+ 1 }	in.	{Span/	12	+ 0 }	in.

Clear Concrete Covers

Top Slab Outside Face	2	in.	(MINIMUM DEPTH OF FILL < 2 ft)
Top Slab Outside Face	1	in.	(MINIMUM DEPTH OF FILL >= 2 ft)
Bottom Slab Outside Face	1	in.	
Sidewall Outside Face	1	in.	
Top Slab Inside Face	1	in.	
Bottom Slab Inside Face	1	in.	
Sidewall Inside Face	1	in.	

Reinforcement Type: Welded Wire

Material Properties

Main Reinforcement Yield Strength	65000	psi
Design Concrete Strength	5000	psi
Concrete Unit Weight	150	pcf
Stirrup Reinforcement Developable Yield Stress	60000	psi
Total Service Stress Limit	100	%

Restore Default Settings

Next Page >> | Return to Main Menu

Default Configuration (page 2)

Design Code: AASHTO - LRFD

Strength Reduction Factors

Design Code

Flexure	1
Shear	0.9

Axial Thrust Load Factor: User Specified 1

Crack Width (CHBDC Only) 0.25 mm

Reinforcement Diameter

		Diameter				Maximum Spacing	
Sidewall Outside	(AS1)	{ 0.05	* Sidewall Thickness	+ 0 }	in.	4	in.
Top Inside	(AS2)	{ 0.05	* Top Slab Thickness	+ 0 }	in.	4	in.
Bottom Inside	(AS3)	{ 0.05	* Bottom Slab Thickness	+ 0 }	in.	4	in.
Sidewall Inside	(AS4)	{ 0.05	* Sidewall Thickness	+ 0 }	in.	4	in.
Top Outside	(AS7)	{ 0.05	* Top Slab Thickness	+ 0 }	in.	4	in.
Bottom Outside	(AS8)	{ 0.05	* Bottom Slab Thickness	+ 0 }	in.	4	in.

Soil Load Data

Soil Unit Weight	120	pcf
Minimum Lateral Pressure Coefficient	0.25	
Maximum Lateral Pressure Coefficient	0.5	

Vertical Arching Factor: Embankment/Compacted

<<Previous Page | Next Page >> | Return to Main Menu

Boxcar - Default (page 3) [illegible]

Live Load Data

Live Load Type (Max 2)	Magnitude (N)		Footprint	User Specified (Not by Code) Length		Width	
☑ HS-Series	25	tons	☑ By Code	10	in.	20	in.
☑ Interstate/Tandem	25	kips	☑ By Code	10	in.	20	in.
☐ Cooper Series	80	kips	☑ By Code	0	in.	0	in.
☐ CHBDC Truck	140	kips	☑ By Code	10	in.	24	in.
☐ Tandem/Tridem	140	kips	☐ By Code	10	in.	20	in.
☐ Other	10	kips	☐ By Code	10	in.	20	in.
☐ None							

Direction of Traffic: Parallel To Span

Impact Factor Options: Design Code

Impact Factor (User Def) 1

Lane Load 0 lb/ft

Live Load Distribution Factor (LLDF): Design Code 1.15

Interstate/Tandem Truck Wheel Layout

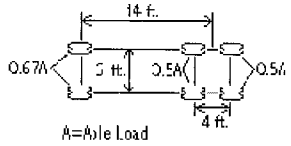

Fluid Loads

Depth of Fluid	1	* Rise
Fluid Unit Weight	62.5	pcf

Surcharge Loads

Uniform Vertical	0	lb/ft
Lateral - Top of Culvert (LLTC)	90	lb/ft
Lateral - Bottom of Culvert (LLBC)	90	lb/ft

<<Previous Page | Next Page >> | Return to Main Menu

Job Name: 25-2898 - Hunter's Ridge Ph.1
Job Location: Owensboro, KY
Contractor: Ernie Davis & Sons Mechanical, Inc.

Structure ID: BC 6 x 4 (Sec L)

P1 BC048072-08WLF-9H BOX CULVERT (08W/08F/08T) G/T

Plant: 100
5/29/2026 8:41:18 AM
Tech: Jared - A
PC: A. Chambers

GENERAL NOTES:

1. PER SECTION 605 OF KYTC STANDARD SPECS FOR ROAD & BRIDGE CONSTRUCTION
2. LOAD REQUIREDMENTS: KY-HL93 (KY TABLE 1)
3. REINFORCEMENT PER ATTACHED KYTC TABLE 1
4. COVER DEPTH: 0' - 4'
5. CONCRETE: 5,000 PSI AT 28 DAYS
6. JOINT SEALANT: 1" BUTYL MASTIC (CS-102)
   EXTERIOR JOINT WRAP: 12" WIDE (CS-212)
7. WEIGHT: 6' X 4' RCBC = 2,354 LBS / LF
   (5'-9" LONG SECTION = 13,537 LBS)

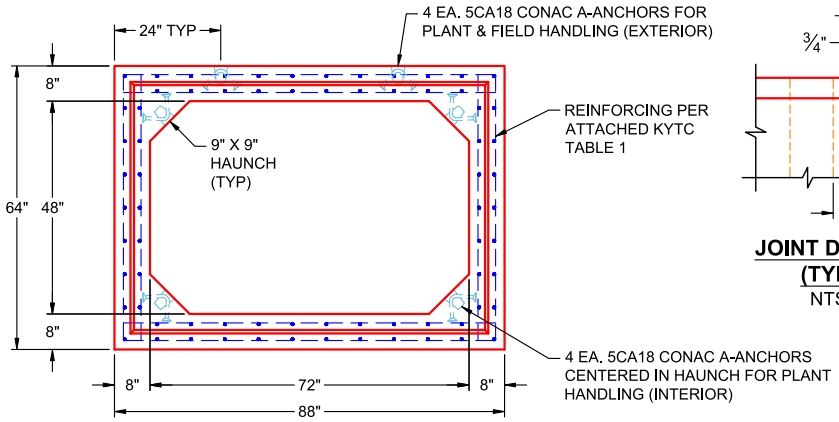

END VIEW
TYPICAL

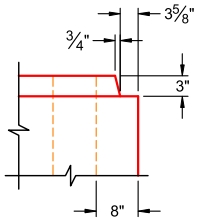

JOINT DETAIL (TYP)
NTS

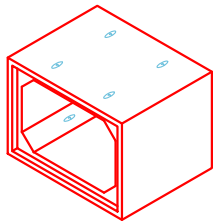

COMPONENT ISOMETRIC VIEW

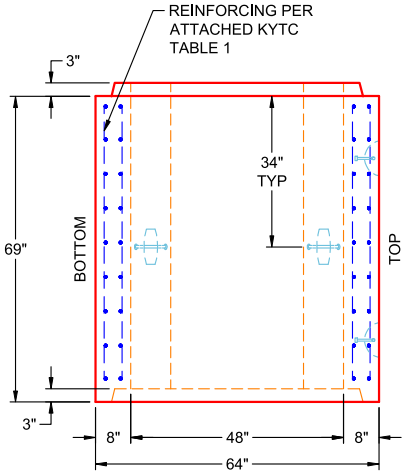

VIEW A
SEC L
(UPRIGHT IN MOLD)

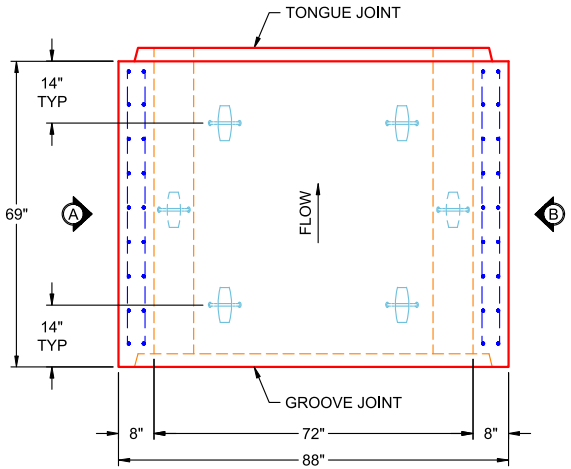

PLAN VIEW
SEC L
(UPRIGHT IN MOLD)

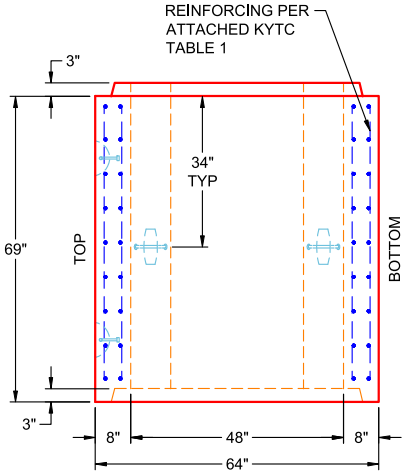

VIEW B
SEC L
(UPRIGHT IN MOLD)

PRODUCTION WORK ORDER	PRODUCT I.D.: BC048072-08WLF-9H	DESCRIPTION: 72" X 48" X 69" BOX CULVERT (8" WALLS & 9" HAUNCH)		
QUALITY CONTROL CHECKLIST	PRODUCT VIEW: RIGHT SIDE UP	CUSTOMER: ERNIE DAVIS & SONS MECHANICAL, INC.		
☐ ALL DIMENSIONS CORRECT.	PLANT: BEAVER DAM, KY	PROJECT: HUNTER'S RIDGE PH 1		
☐ LIFTERS INSTALLED INSIDE.	WEIGHT: 13,537 LBS	STRUCTURE: BC 6 X 4 (SEC L)		
☐ RECESS WITH HAUNCHES CORRECT.	TOP SECTION JOINT: TONGUE	ORDER NO: 25-2898		
☐ REINFORCING CORRECT.	BASE SECTION JOINT: GROOVE	PE: J.H. ROSS	DRAWING: K. CARDWELL	
☐ SURFACE QUALITY ACCEPTABLE.	QC CHECK INITIALS:	DATE: 05/29/26	SCALE: NTS	PG. 1 OF 1
☐ LIFTERS INSTALLED OUTSIDE.				
☐ PRODUCT SQUARE.				

THIS DRAWING IS THE PROPERTY OF INFRASTRUCTURE PRECAST, INC. ANY USE OR DUPLICATION OF THIS DRAWING WITHOUT PRIOR AUTHORIZATION IS STRICTLY PROHIBITED.

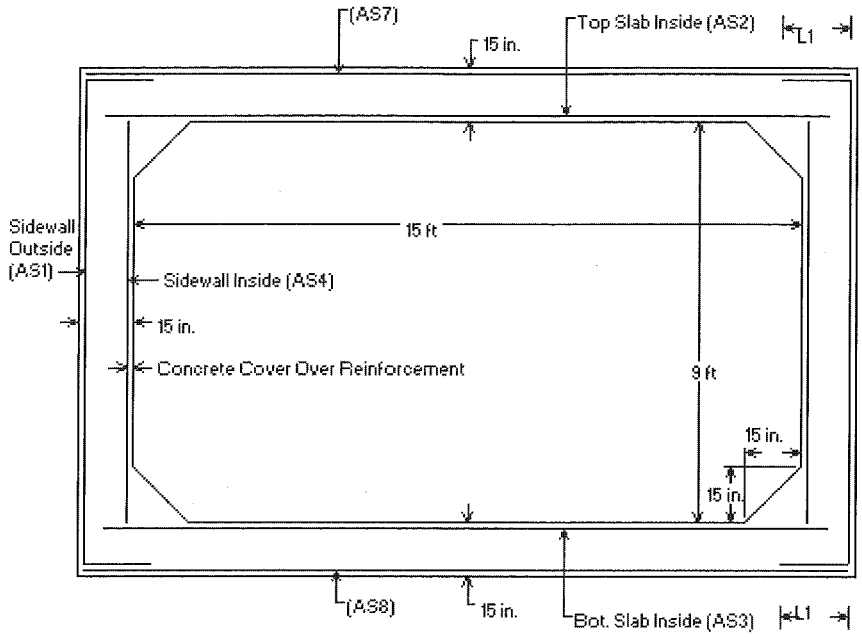

* <L1> is Splice Length
* (AS7) is Top Slab Outside
* (AS8) is Bottom Slab Outside
* See Box Culvert Design Summary Sheet for transverse and distribution reinforcement, as required.
* For sidewall thicknesses of 6 in. and above, extend AS2 and AS3 a min. of 4 in. beyond the inside face of the sidewall. For thicknesses less than 6 in., extend AS2 and AS3 at least to within 1-1/2 in. of the outside face of the sidewall.

Notes:

1) Other reinforcement schemes that provide the required reinforcement areas at all locations identified in the program output are acceptable.
2) Longitudinal reinforcement is not shown for clarity, see AASHTO M259 for longitudinal reinforcement and for additional requirements.

KY Table 1

Precast Culvert KYHL-93 Design Table

	Design Earth Cover, ft	As1	As2	As3	As4	As7	As8	As5	As6
6x4x7	0<2*	0.202	0.421	0.266	0.168	0.192	0.168	0.192	0.192
	2<3	0.251	0.368	0.288	0.168	0.168	0.168		
	3-5	0.19	0.271	0.24	0.168	0.168	0.168		
	10	0.168	0.228	0.234	0.168	0.168	0.168		
	15	0.216	0.306	0.313	0.168	0.168	0.168		
	20	0.275	0.391	0.398	0.168	0.168	0.168		
	25	0.338	0.479	0.487	0.168	0.168	0.168		
	30	0.404	0.571	0.579	0.168	0.168	0.168		
	35	0.473	0.667	0.675	0.168	0.168	0.168		

*top slab 8"

	Design Earth Cover, ft	As1	As2	As3	As4	As7	As8	As5	As6
6x5x7	0<2*	0.192	0.449	0.291	0.168	0.192	0.168	0.192	0.192
	2<3	0.22	0.398	0.316	0.168	0.168	0.168		
	3-5	0.168	0.294	0.262	0.168	0.168	0.168		
	10	0.168	0.243	0.252	0.168	0.168	0.168		
	15	0.188	0.326	0.336	0.168	0.168	0.168		
	20	0.238	0.417	0.427	0.168	0.168	0.168		
	25	0.291	0.512	0.522	0.168	0.168	0.168		
	30	0.347	0.611	0.622	0.168	0.168	0.168		
	35	0.406	0.714	0.725	0.168	0.168	0.168		

*top slab 8"

	Design Earth Cover, ft	As1	As2	As3	As4	As7	As8	As5	As6
6x6x7	0<2*	0.192	0.47	0.311	0.168	0.192	0.168	0.192	0.192
	2<3	0.195	0.421	0.337	0.168	0.168	0.168		
	3-5	0.168	0.311	0.277	0.168	0.168	0.168		
	10	0.168	0.252	0.263	0.168	0.168	0.168		
	15	0.168	0.338	0.349	0.168	0.168	0.168		
	20	0.212	0.432	0.444	0.168	0.168	0.168		
	25	0.259	0.531	0.543	0.168	0.168	0.168		
	30	0.308	0.634	0.647	0.168	0.168	0.168		
	35	0.359	0.741	0.755	0.168	0.168	0.168		

*top slab 8"

Default Configuration (page 1)

Default Parameters

Data Directory: c:

Jeremiah.Littleton
Documents
BOXCAR3.1

○ SI Unit File ◉ Customary US Unit File

Section Length 8 ft

Box Geometry

	SPAN < / ft				SPAN > / ft			
Top Slab Thickness	{Span/	12	+ 1 }	in.	{Span/	12	+ 0 }	in.
Bottom Slab Thickness	{Span/	12	+ 1 }	in.	{Span/	12	+ 0 }	in.
Sidewall Thickness	{Span/	12	+ 1 }	in.	{Span/	12	+ 0 }	in.
Horizontal Haunch Length	{Span/	12	+ 1 }	in.	{Span/	12	+ 0 }	in.
Vertical Haunch Length	{Span/	12	+ 1 }	in.	{Span/	12	+ 0 }	in.

Clear Concrete Covers

Top Slab Outside Face	2	in.	(MINIMUM DEPTH OF FILL < 2 ft)
Top Slab Outside Face	1	in.	(MINIMUM DEPTH OF FILL >= 2 ft)
Bottom Slab Outside Face	1	in.	
Sidewall Outside Face	1	in.	
Top Slab Inside Face	1	in.	
Bottom Slab Inside Face	1	in.	
Sidewall Inside Face	1	in.	

Reinforcement Type: Welded Wire

Material Properties

Main Reinforcement Yield Strength	65000	psi
Design Concrete Strength	5000	psi
Concrete Unit Weight	150	pcf
Stirrup Reinforcement Developable Yield Stress	60000	psi
Total Service Stress Limit	100	%

Restore Default Settings

Next Page >> | Return to Main Menu

Default Configuration (page 2)

Design Code: AASHTO - LRFD

Strength Reduction Factors

Design Code

Flexure	1
Shear	0.9

Axial Thrust Load Factor: User Specified 1

Crack Width (CHBDC Only) 0.25 mm

Reinforcement Diameter

		Diameter				Maximum Spacing	
Sidewall Outside	(AS1)	{ 0.05	* Sidewall Thickness	+ 0 }	in.	4	in.
Top Inside	(AS2)	{ 0.05	* Top Slab Thickness	+ 0 }	in.	4	in.
Bottom Inside	(AS3)	{ 0.05	* Bottom Slab Thickness	+ 0 }	in.	4	in.
Sidewall Inside	(AS4)	{ 0.05	* Sidewall Thickness	+ 0 }	in.	4	in.
Top Outside	(AS7)	{ 0.05	* Top Slab Thickness	+ 0 }	in.	4	in.
Bottom Outside	(AS8)	{ 0.05	* Bottom Slab Thickness	+ 0 }	in.	4	in.

Soil Load Data

Soil Unit Weight	120	pcf
Minimum Lateral Pressure Coefficient	0.25	
Maximum Lateral Pressure Coefficient	0.5	

Vertical Arching Factor: Embankment/Compacted

<<Previous Page | Next Page >> | Return to Main Menu

Boxcar - Default (page 3) [illegible]

Live Load Data

Live Load Type (Max 2)	Magnitude (N)		Footprint	User Specified (Not by Code) Length		Width	
☑ HS-Series	25	tons	☑ By Code	10	in.	20	in.
☑ Interstate/Tandem	25	kips	☑ By Code	10	in.	20	in.
☐ Cooper Series	80	kips	☑ By Code	0	in.	0	in.
☐ CHBDC Truck	140	kips	☑ By Code	10	in.	24	in.
☐ Tandem/Tridem	140	kips	☐ By Code	10	in.	20	in.
☐ Other	10	kips	☐ By Code	10	in.	20	in.
☐ None							

Direction of Traffic: Parallel To Span

Impact Factor Options: Design Code

Impact Factor (User Def) 1

Lane Load 0 lb/ft

Live Load Distribution Factor (LLDF): Design Code 1.15

Interstate/Tandem Truck Wheel Layout

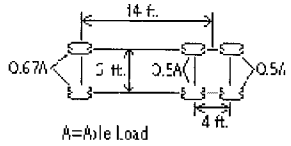

Fluid Loads

Depth of Fluid	1	* Rise
Fluid Unit Weight	62.5	pcf

Surcharge Loads

Uniform Vertical	0	lb/ft
Lateral - Top of Culvert (LLTC)	90	lb/ft
Lateral - Bottom of Culvert (LLBC)	90	lb/ft

<<Previous Page | Next Page >> | Return to Main Menu

ALCOA CONCRETE LOGS

Quantity 428

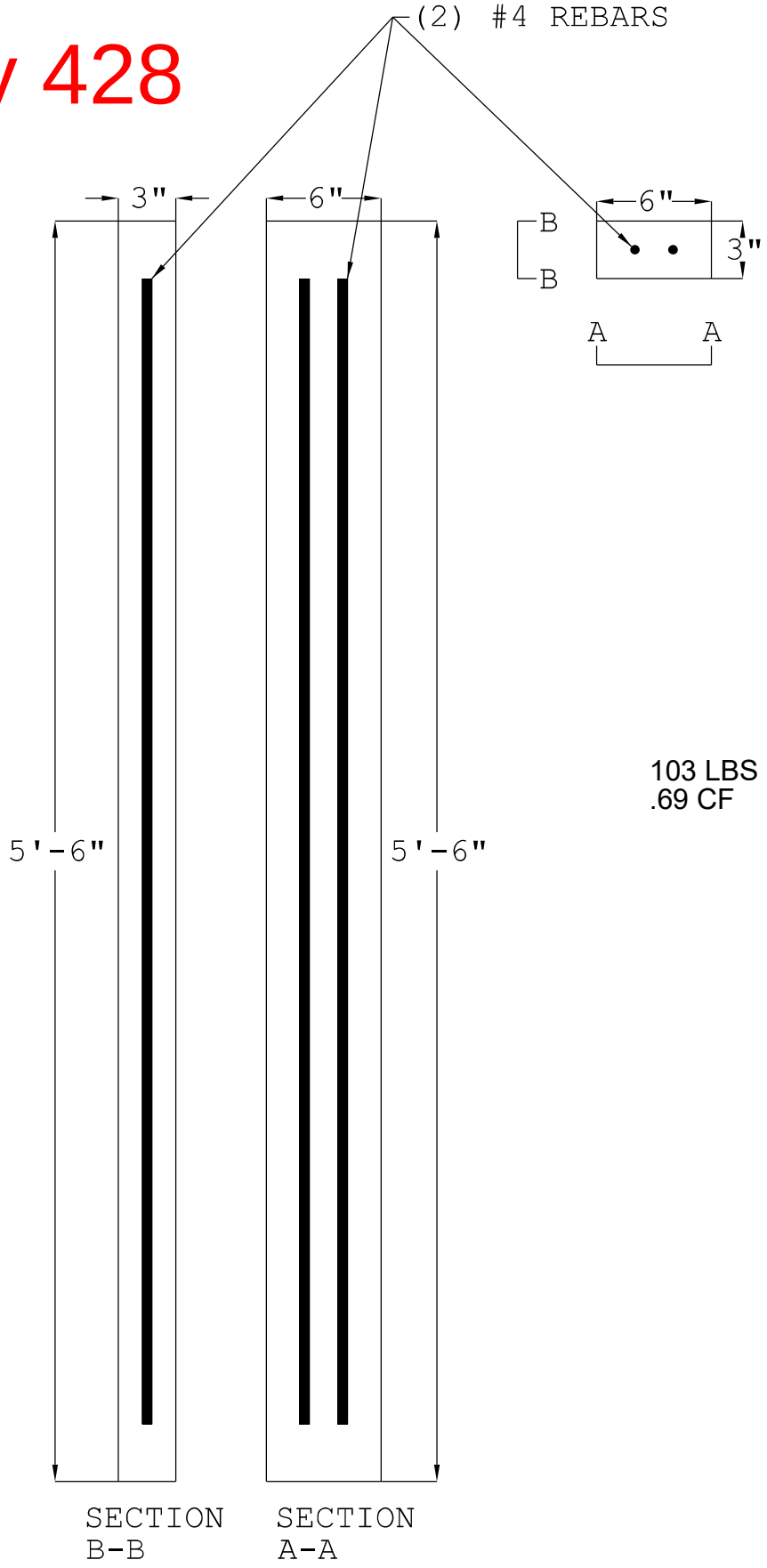

103 LBS
.69 CF

Job Name: 25-3195 - The Banks Lift Station and Forcemain Job Location: Gallatin, TN Contractor: W&O Construction	Plant: 100 5/28/2026 6:53:08 PM	Tech: Jared - F PC: A. Chambers	

Structure ID: VALVE VAULT

P1 BX7296-08W08F-VF-CDARED BOX BASE 8inW, 8inF, Variable Ht w/CONBLOCK CDA RED F/n

P3) 36" x 36" - HATCH (CAST FLUSH) - 3"	100 lb
P2) 72" x 96" - BX FLAT TOP 8"W w/36"x36" HATCH w/CONBLOCK CDA RED F/F - 8"	5746 lb
P1) 72" x 96" - BOX BASE 8inW, 8inF, Variable Ht w/CONBLOCK CDA RED F/n - 56"	20223 lb
1) JOINT WRAP - 0.065"x6"x50' CONSEAL CS212	0 lb
1) JOINT WRAP PRIMER - CONSEAL CS-75 (1 gal.)	0 lb
1) ADMIXTURE CONBLOCK CDA RED	0 lb
1) HATCH (Alum.) - HALLIDAY W1S 36"x36"	78 lb
1) 72" x 96" - Conseal CS-231 1.00" (Double)	0 lb
1) 36" x 36" - Conseal CS-231 1.00" (Double)	0 lb
3) PSX - 12M NYLO	24 lb
Structure Total:	26171 lb

Structure Notes: .
1. PER ASTM C478 SPECIFICATIONS.
2. CONCRETE = 5,000 PSI AT 28 DAYS.
3. ADMIXTURE = CONBLOCK CDA RED.
4. HATCH SUPPLIED BY ICAST (HALLIDAY W1S 36"x36").

.
REINFORCING PER ASTM A615 (GRADE 60).
- TOP SLAB (As .62) #5 BARS AT 6" C.C.E.W.
- WALLS (As .12) #5 BARS AT 12" C.C.E.W.
- FLOOR (As .12) #5 BARS AT 12" C.C.E.W.

Rim: 458.5' Rim to Invert: 3.25' Slack: -0.04" Sump: 24.96" Step Position:

Position	Elev	Angle	Ext. (cw)	Pipe	Pipe OD	Connector	Hole	Horz Size	Up (_)	Offset
Invert 1	455.25'	0°	44"	8" DI	9"	PSX 12M NYLO	12"	12"	23"	0"
Invert 2	455.25'	180°	33"	8" DI	9"	PSX 12M NYLO	12"	12"	23"	-11"
Invert 3	455.25'	180°	55"	8" DI	9"	PSX 12M NYLO	12"	12"	23"	11"
Invert 4										
Invert 5										
Invert 6										
Invert 7										
Invert 8										

1ST POUR (FLOOR) = 6,598 LBS
2ND POUR (WALLS) = 13,607 LBS

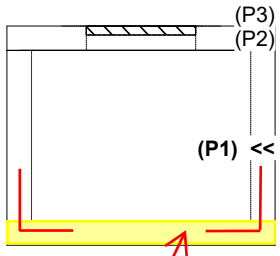

1ST POUR (FLOOR) STUB #5 L BARS OUT TOP FLOOR, SPA AT 12" C/C FOR CONNECTING WALLS

RIGHT-SIDE UP VIEW (int. dimensions)

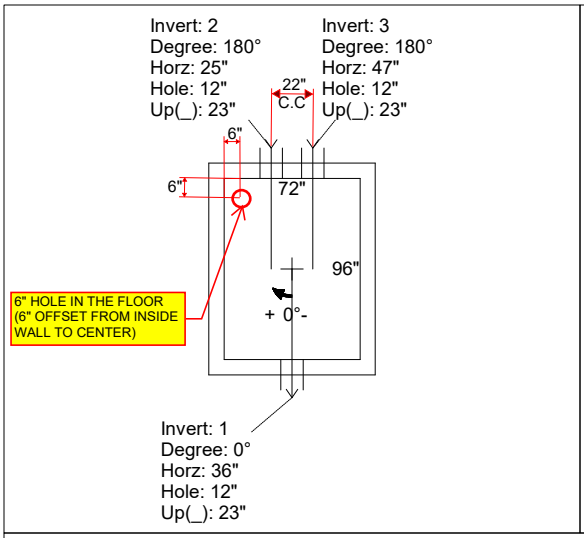

UPSIDE-DOWN VIEW (int. dimenions)

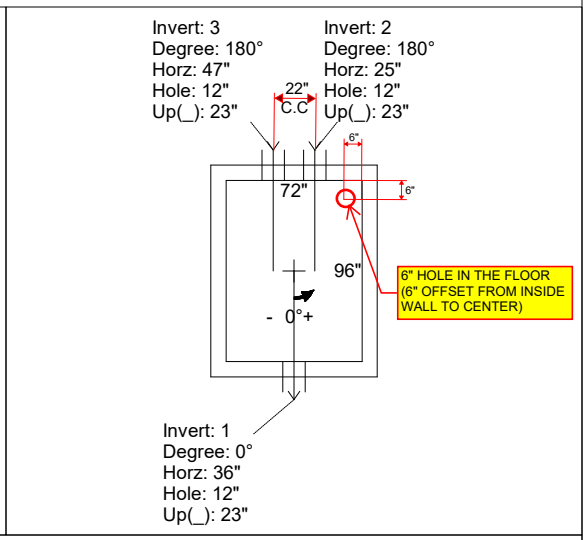

INSIDE WALL DIMENSIONS

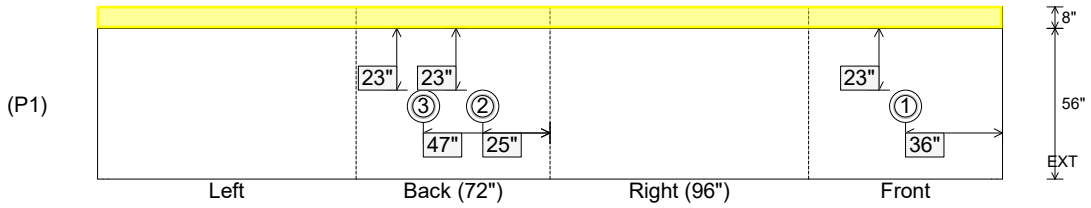

Coating (Int): Coating (Ext):	Seam Up: Flat Seam Dn: n/a	Wall Thickness: 8" Floor Height: 8"	Height (Int): 56" Height (Ext): 64"	Weight (Net): 20223 lb Volume (Net): 5.16cu.yd

Job Name: 25-3195 - The Banks Lift Station and Forcemain Job Location: Gallatin, TN Contractor: W&O Construction	Plant: 100 5/28/2026 6:53:08 PM	Tech: Jared - F PC: A. Chambers	

Structure ID: VALVE VAULT

P1 BX7296-08W08F-VF-CDARED BOX BASE 8inW, 8inF, Variable Ht w/CONBLOCK CDA RED F/n

P3) 36" x 36" - HATCH (CAST FLUSH) - 3"	100 lb
P2) 72" x 96" - BX FLAT TOP 8"W w/36"x36" HATCH w/CONBLOCK CDA RED F/F - 8"	5746 lb
P1) 72" x 96" - BOX BASE 8inW, 8inF, Variable Ht w/CONBLOCK CDA RED F/n - 56"	20223 lb
1) JOINT WRAP - 0.065"x6"x50' CONSEAL CS212	0 lb
1) JOINT WRAP PRIMER - CONSEAL CS-75 (1 gal.)	0 lb
1) ADMIXTURE CONBLOCK CDA RED	0 lb
1) HATCH (Alum.) - HALLIDAY W1S 36"x36"	78 lb
1) 72" x 96" - Conseal CS-231 1.00" (Double)	0 lb
1) 36" x 36" - Conseal CS-231 1.00" (Double)	0 lb
3) PSX - 12M NYLO	24 lb
Structure Total:	26171 lb

Structure Notes: .
1. PER ASTM C478 SPECIFICATIONS.
2. CONCRETE = 5,000 PSI AT 28 DAYS.
3. ADMIXTURE = CONBLOCK CDA RED.
4. HATCH SUPPLIED BY ICAST (HALLIDAY W1S 36"x36").

.
REINFORCING PER ASTM A615 (GRADE 60).
- TOP SLAB (As .62) #5 BARS AT 6" C.C.E.W.
- WALLS (As .12) #5 BARS AT 12" C.C.E.W.
- FLOOR (As .12) #5 BARS AT 12" C.C.E.W.

Rim: 458.5' Rim to Invert: 3.25' Slack: -0.04" Sump: 24.96" Step Position:

Position	Elev	Angle	Ext. (cw)	Pipe	Pipe OD	Connector	Hole	Horz Size	Up (_)	Offset
Invert 1	455.25'	0°	44"	8" DI	9"	PSX 12M NYLO	12"	12"	23"	0"
Invert 2	455.25'	180°	33"	8" DI	9"	PSX 12M NYLO	12"	12"	23"	-11"
Invert 3	455.25'	180°	55"	8" DI	9"	PSX 12M NYLO	12"	12"	23"	11"
Invert 4										
Invert 5										
Invert 6										
Invert 7										
Invert 8										

1ST POUR (FLOOR) = 6,598 LBS
2ND POUR (WALLS) = 13,607 LBS

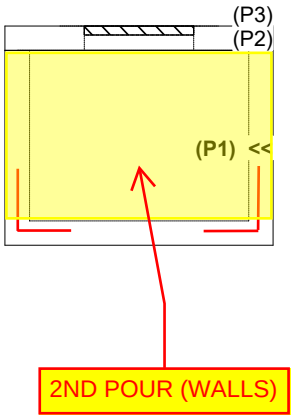

RIGHT-SIDE UP VIEW (int. dimensions)

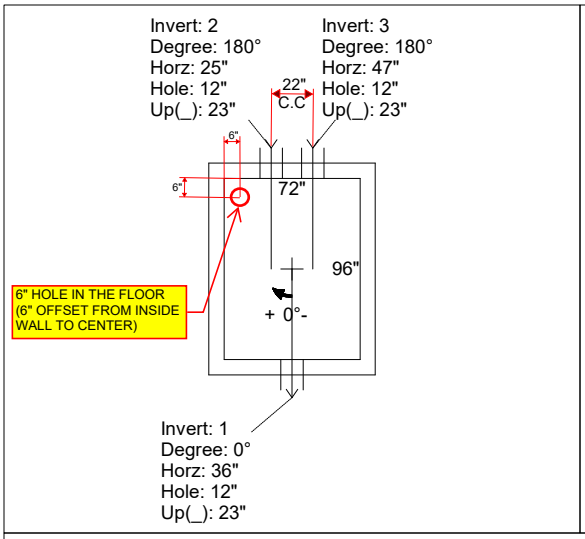

UPSIDE-DOWN VIEW (int. dimenions)

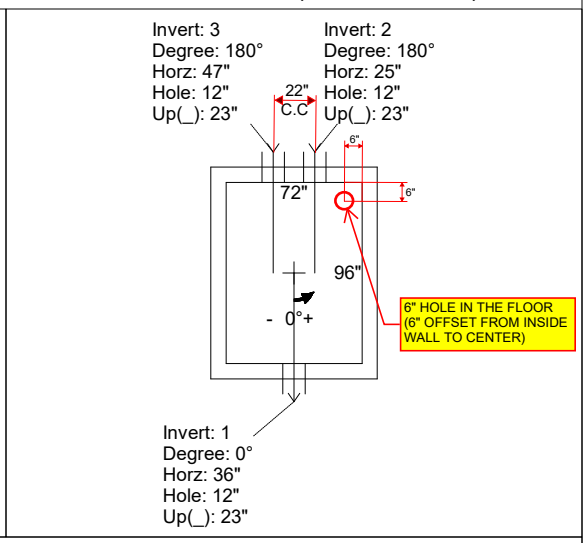

INSIDE WALL DIMENSIONS

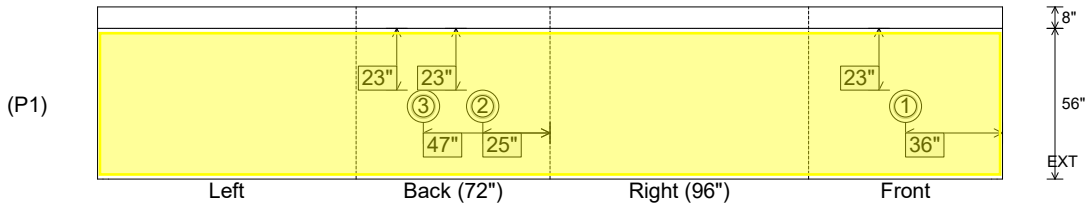

Coating (Int): Coating (Ext):	Seam Up: Flat Seam Dn: n/a	Wall Thickness: 8" Floor Height: 8"	Height (Int): 56" Height (Ext): 64"	Weight (Net): 20223 lb Volume (Net): 5.16cu.yd

Job Name: 25-3062 Portland Bypass Job Location: Portland, TN Contractor: Scotty's Contracting & Stone, LLC	Plant: Beaver Dam 6/1/2026 8:24:55 AM	Tech: J. Coppage PC: C. Goff	

Structure ID: MD-19

P2 BX4848-08R48 BOX RISER 8inW

P4) 48" x 48" - CASTING HEIGHT - 0"	0 lb
P3) 48" x 48" - BOX RISER 8inW - 48"	7218 lb
P2) 48" x 48" - BOX RISER 8inW - 48"	7218 lb
P1) 48" x 48" - BOX BASE 8inW, 8inF, Variable Ht - 41"	8558 lb
1) CASTING - JBS TYPE 39 TDOT GRATES (48" X 48")	459 lb
1) Hole - 26	0 lb

Structure Total:	23453 lb

Structure Notes:
1. PER ASTM C913 SPECIFICATIONS.
2. CONCRETE = 4,000 PSI AT 28 DAYS.
3. JBS TDOT TYPE 39 BY ICAST
4. REINFORCING PER TDOT DRAWING D-CB-39S ASTM A615 (GRADE 60).
5. PRODUCTION TO PLACE A 4.5" DEEP X 2" WIDE RECESS IN THE TOP INSIDE OF THE 0 DEGREE AND THE 180 DEGREE WALL OF THE TOP RISER.

Rim: 773.95' Rim to Invert: 11.21' Slack: 0.02" Sump: 2.5" Step Position:

Position	Elev	Angle	Ext. (cw)	Pipe	Pipe OD	Connector	Hole	Horz Size	Up (_)	Offset
Invert 1										
Invert 2										
Invert 3										
Invert 4										
Invert 5										
Invert 6										
Invert 7										
Invert 8										

RIGHT-SIDE UP VIEW (int. dimensions)

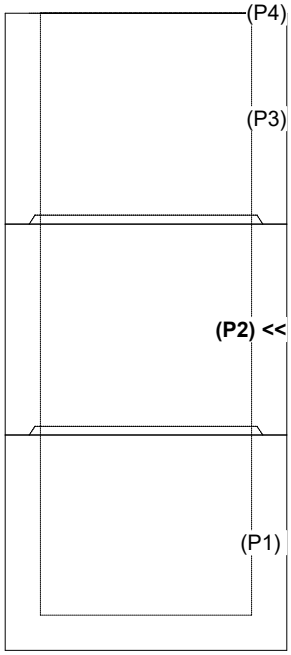

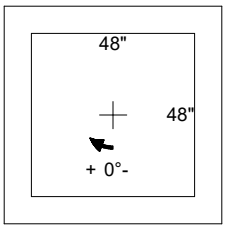

INSIDE WALL DIMENSIONS

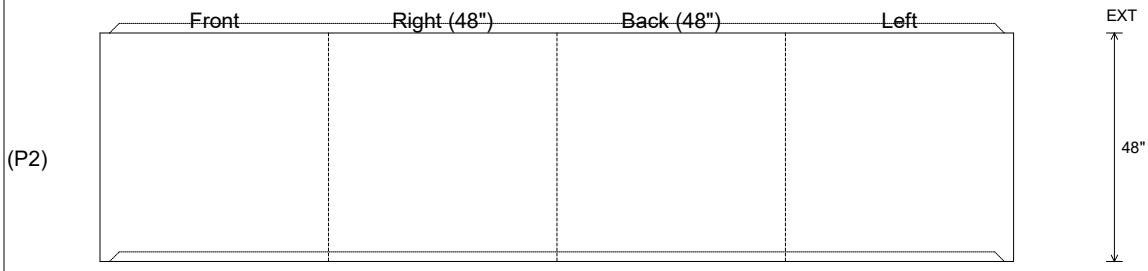

Coating (Int): Coating (Ext):	Seam Up: Tongue Seam Dn: Groove	Wall Thickness: 8" Floor Height: 0"	Height (Int): 48" Height (Ext): 48"	Weight (Net): 7218 lb Volume (Net): 1.84cu.yd

Job Name: 25-3062 Portland Bypass Job Location: Portland, TN Contractor: Scotty's Contracting & Stone, LLC	Plant: Beaver Dam 6/1/2026 8:23:26 AM	Tech: J. Coppage PC: C. Goff	

Structure ID: MD-17

P1 BX4848-08BAVF BOX BASE 8inW, 8inF, Variable Ht

P2) 48" x 48" - CASTING HEIGHT - 0"	0 lb
P1) 48" x 48" - BOX BASE 8inW, 8inF, Variable Ht - 40"	8408 lb
1) CASTING - JBS TYPE 39 TDOT GRATES (48" X 48")	459 lb
1) Hole - 26	0 lb
Structure Total:	8867 lb

Structure Notes:
1. PER ASTM C913 SPECIFICATIONS.
2. CONCRETE = 4,000 PSI AT 28 DAYS.
3. JBS TDOT TYPE 39 BY ICAST
4. REINFORCING PER TDOT DRAWING D-CB-39S ASTM A615 (GRADE 60).
5. PRODUCTION TO PLACE A 4.5" DEEP X 2" WIDE RECESS IN THE TOP INSIDE OF THE 0 DEGREE AND THE 180 DEGREE WALL OF THE BASE.

Rim: 765.4' Rim to Invert: 3.16' Slack: 0.42" Sump: 2.5" Step Position:

Position	Elev	Angle	Ext. (cw)	Pipe	Pipe OD	Connector	Hole	Horz Size	Up (_)	Offset
Invert 1	762.24'	270°	32"	18" RCP B WALL	23"	Hole 26	26"	26"	0"	0"
Invert 2										
Invert 3										
Invert 4										
Invert 5										
Invert 6										
Invert 7										
Invert 8										

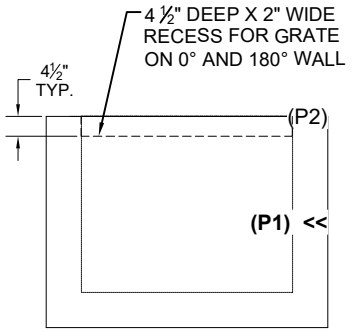

RIGHT-SIDE UP VIEW (int. dimensions)

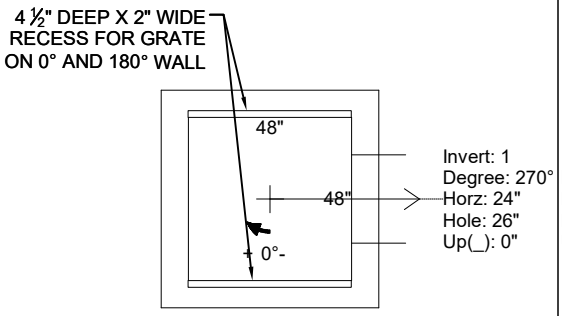

UPSIDE-DOWN VIEW (int. dimenions)

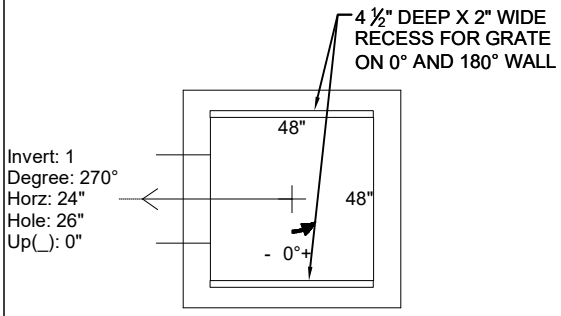

INSIDE WALL DIMENSIONS

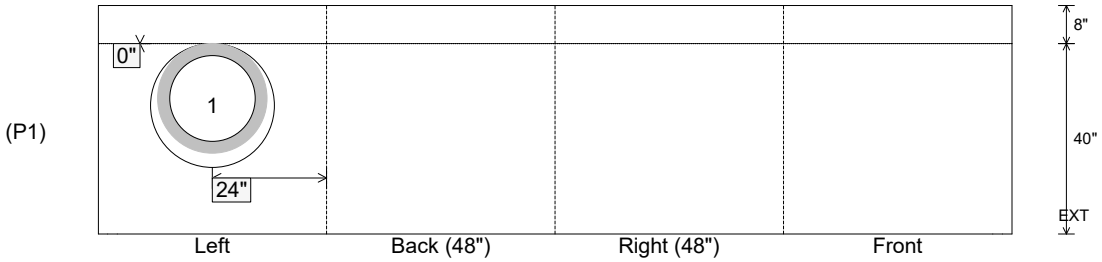

Coating (Int): Coating (Ext):	Seam Up: Flat Seam Dn: n/a	Wall Thickness: 8" Floor Height: 8"	Height (Int): 40" Height (Ext): 48"	Weight (Net): 8408 lb Volume (Net): 2.15cu.yd

Job Name: 25-3452 - Churchill Downs Skye Terrace Improvements Job Location: Louisville, KY 40208 Contractor: Louisville Paving and Construction	Plant: 100 4/30/2026 1:21:45 PM	Tech: Jared - F PC: J. Jarvis	

Structure ID: S114

P1 BX3636-08BAVF BOX BASE 8inW, 8inF, Variable Ht F/n

P2) 36" x 36" - CASTING HEIGHT - 3"	0 lb
P1) 36" x 36" - BOX BASE 8inW, 8inF, Variable Ht F/n - 32"	5408 lb
1) CASTING - HOE 595 F/G	376 lb
1) 36" x 36" - Conseal CS-102 1.00"	0 lb
1) Hole - 16	0 lb
1) Hole - 10	0 lb
Structure Total:	5784 lb

Structure Notes:
1. PER ASTM C913 SPECIFICATIONS.
2. CONCRETE = 4,000 PSI AT 28 DAYS.
3. NO STEPS AND NO INVERT CHANNEL.
4. CASTING BY ICAST (HOE 595 F/G)

REINFORCING PER ASTM A615 (GRADE 60).
- WALLS (As .12) #5 BARS AT 12" C.C.E.W.
- FLOOR (As .12) #5 BARS AT 12" C.C.E.W.

Rim: 454.42' Rim to Invert: 2.96' Slack: 0.52" Sump: 0" Step Position:

Position	Elev	Angle	Ext. (cw)	Pipe	Pipe OD	Connector	Hole	Horz Size	Up (_)	Offset
Invert 1	451.46'	0°	26"	12" HDPE	14.5"	Hole 16	16"	16"	-1.25"	0"
Invert 2	451.79'	270°	26"	8" PVC SDR26	8.5"	Hole 10	10"	10"	3.75"	0"
Invert 3										
Invert 4										
Invert 5										
Invert 6										
Invert 7										
Invert 8										

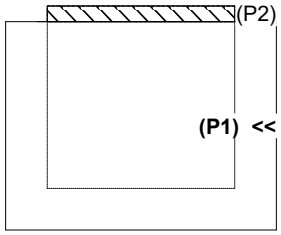

RIGHT-SIDE UP VIEW (int. dimensions)

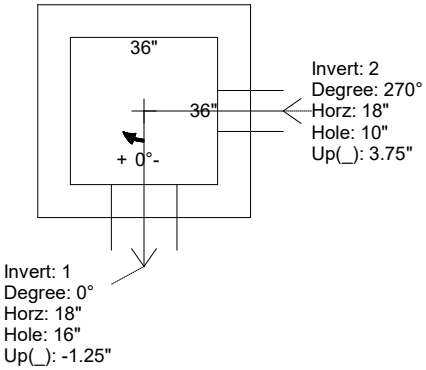

UPSIDE-DOWN VIEW (int. dimenions)

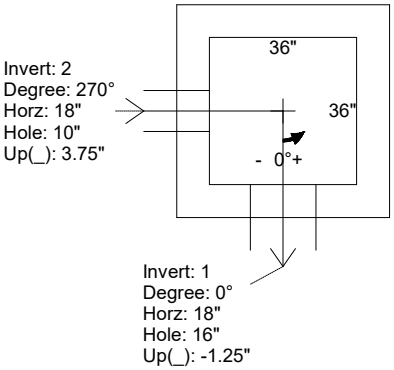

INSIDE WALL DIMENSIONS

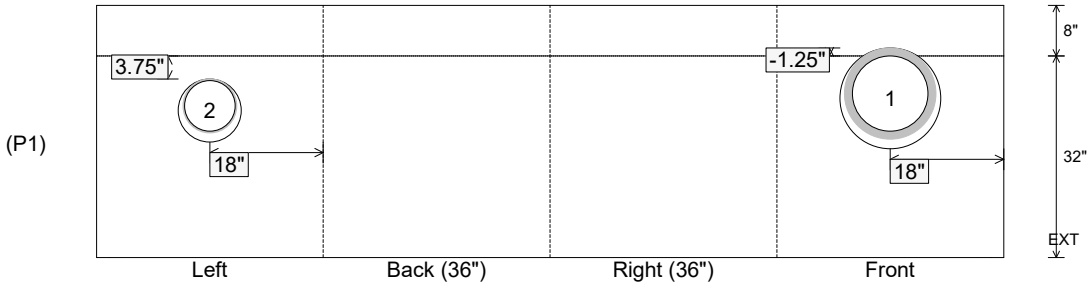

Coating (Int): Coating (Ext):	Seam Up: Flat Seam Dn: n/a	Wall Thickness: 8" Floor Height: 8"	Height (Int): 32" Height (Ext): 40"	Weight (Net): 5408 lb Volume (Net): 1.38cu.yd

Job Name: 26-2221 Nix HQ Expansion Job Location: Poseyville, IN Contractor: Chastain Excavating	Plant: Beaver Dam 6/15/2026 10:39:01 AM	Tech: S. Felletter PC: T. Lewis	

Structure ID: FES 1 FES

P1 FES24B **24" - FLARED END SECTION BELL (OUTLET) F/F**

Quantity 1 - Bell

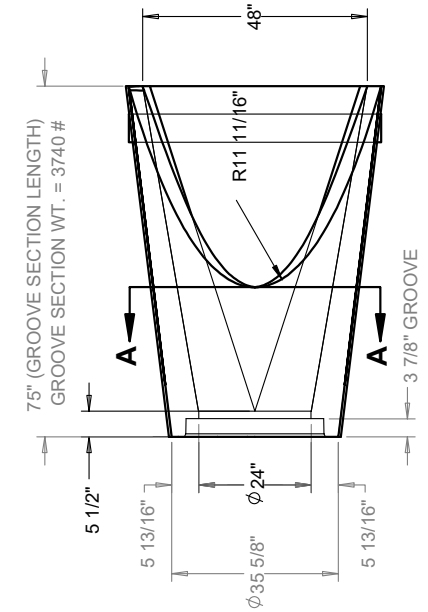

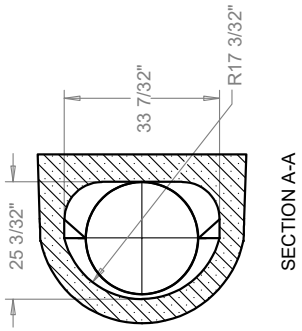

SECTION A-A

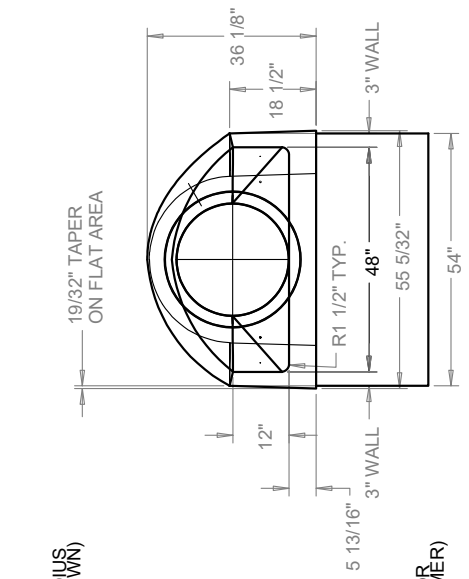

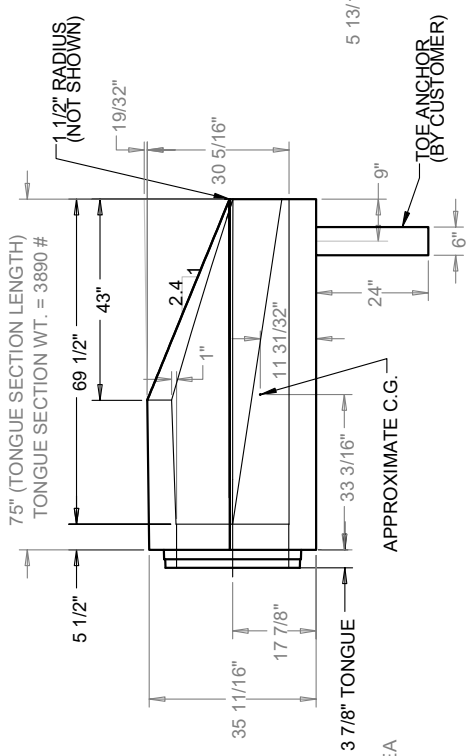

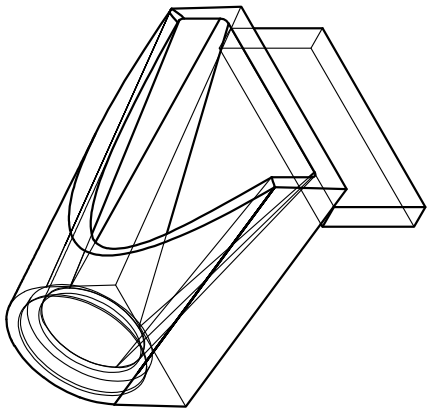

ISOMETRIC VIEW

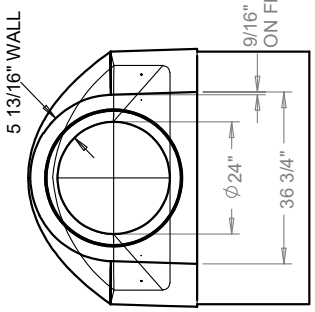

GENERAL NOTES:

1. FLARED END SECTION IS MANUFACTURED AND TESTED IN ACCORDANCE WITH ASTM C-76 OR ASTM C-655 AND AASHTO M-170 SPECIFICATIONS.
2. ALL PIPE JOINTS MEET ASTM C-443 AND C-361 SPECIFICATIONS.
3. INSTALL REINFORCED CONCRETE PIPE PER ASTM C-1479-STANDARD PRACTICE FOR INSTALLATION OF PRECAST CONCRETE PIPE.
4. FLARED END SECTION REINFORCING IS IN ACCORDANCE WITH ASTM C-76.
5. WEIGHT SHOWN IS CALCULATED USING 150 LBS. PER CUBIC FT. UNIT WEIGHT OF CONCRETE.

24"ø REINFORCED CONCRETE FLARED END SECTION (TYPE 2)

INFRASTRUCTURE PRECAST, INC.
981 WEST 7TH ST., BEAVER DAM, KY. 42320
PHONE: (270) 363-2238, FAX: (270) 298-7424

DRAWING DATE: SEPTEMBER 2, 2022
DRAWING NAME: 24-FES-TYPE 2
SCALE: NTS
CATALOG I.D.: 24-RCP-FES
WEB ADDRESS: WWW.ICASTINC.COM

THIS DRAWING IS THE PROPERTY OF INFRASTRUCTURE PRECAST, INC. ANY USE OR DUPLICATION OF THIS DRAWING WITHOUT PRIOR AUTHORIZATION IS STRICTLY PROHIBITED.

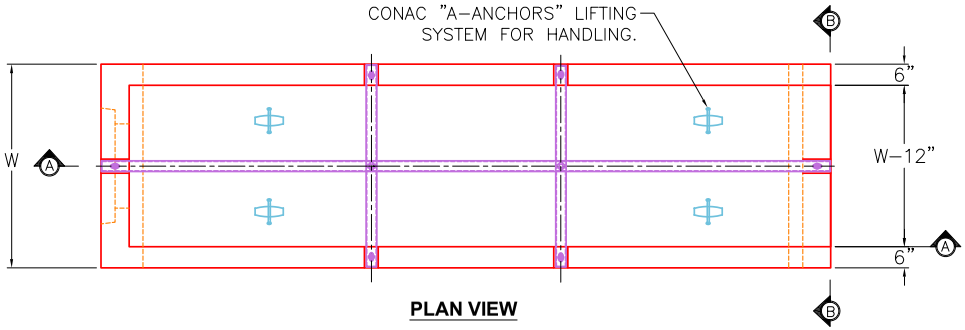

PLAN VIEW

NOTE:
JBS 42" TDOT 3:1 "U" Cross Drain EW Grate supplied by ICAST

GENERAL NOTES

1. DRAWING TO BE USED FOR ALL 12" THROUGH 48" SIDE DRAIN CONCRETE ENDWALLS. MANUFACTURING, FOR CROSS DRAINS ONLY.
2. CONCRETE: Fc' = 4,500 PSI @ 28 DAYS.
3. REINFORCING STEEL: ASTM A615, Fy=60,000 PSI. SEE STD. DWGS. D-PE-15A, D-PE-18, D-PE-24A, D-PE-30A, D-PE-36A, D-PE-42A & D-PE-48A FOR BILL OF STEEL.
4. SPLICING OF REINFORMENT IS ACCEPTABLE PROVIDED THAT A MINIMUM 21" SPLICE LENGTH IS USED.
5. APPROPRIATE SIZING AND LOCATIONS OF THE LIFTING INSERTS WILL BE THE RESPONSIBILITY OF INFRASTRUCTURE PRECAST, INC.
6. LIFTING INSERT POCKETS SHALL BE GROUTED ON SITE BY THE CONTRACTOR AFTER THE ENDWALL IS SET AS PER TDOT REQUIREMENTS.
7. DIMENSIONAL AND REINFORCING TOLERANCES WILL BE AS SHOWN IN STANDARD OPERATING PROCEDURE (SOP) 5-3.
8. PIPE OPENINGS FOR HEADWALLS ARE BASED ON REINFORCED CONCRETE PIPE WITH TYPE "B" WALL AS PER AMERICAN CONCRETE PIPE ASSOCIATION (ACPA). OUTSIDE DIAMETER + 3"-4".
9. TOE WALL BACK SLOPE MAY BE CONSTRUCTED VARIABLE FROM VERTICAL UP TO 15°.

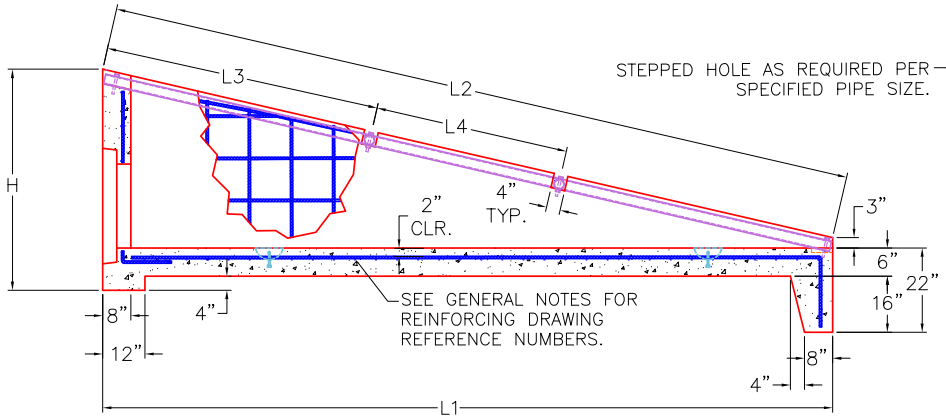

SECTION A-A

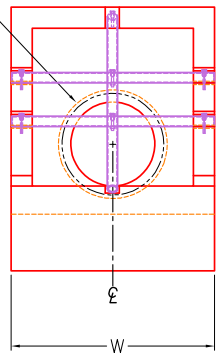

ELEVATION B-B

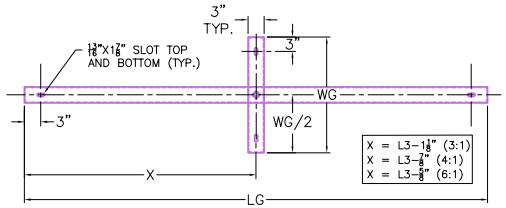

-30"ø & 36"ø PIPE (3:1, 4:1 & 6:1 SLOPES)
-42"ø & 48" PIPE (3:1 & 4:1 SLOPES)

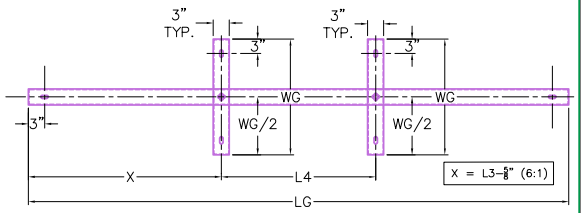

-42"ø & 48" PIPE (6:1 SLOPE)

STEEL PIPE GRATE PLAN VIEWS
(SEE D-PE-99 FOR MOUNTING STEEL GRATES)

DIMENSIONS & QUANTITIES FOR ONE ENDWALL 3:1

PIPE DIA. (D)	CONCRETE ENDWALL DIMENSIONS				GRATE DISPLACEMENT DIMENSIONS		STRUCT. STEEL	WEIGHT
	H	W	L1	L2	L3	L4	LBS.	LBS.
15"	2'-11"	2'-8"	6'-0"	6'-3 7/8"	N/A	N/A	N/A	2,819
18"	3'-2"	2'-11"	6'-8"	7'-0 3/8"	N/A	N/A	N/A	3,406
24"	3'-9"	3'-6"	8'-5"	8'-10 1/2"	N/A	N/A	N/A	5,011
30"	4'-5"	4'-1"	10'-5"	10'-11 3/4"	5'-2"	N/A	114	7,204
36"	5'-0"	4'-8"	12'-2"	12'-9 7/8"	6'-4 3/4"	N/A	132	9,513
42"	5'-6"	5'-3"	13'-8"	14'-4 7/8"	7'-4 1/4"	N/A	148	11,862
48"	6'-1"	5'-10"	15'-5"	16'-3"	7'-4 7/8"	N/A	167	14,838

DIMENSIONS & QUANTITIES FOR ONE ENDWALL 4:1

PIPE DIA. (D)	CONCRETE ENDWALL DIMENSIONS				GRATE DISPLACEMENT DIMENSIONS		STRUCT. STEEL	WEIGHT
	H	W	L1	L2	L3	L4	LBS.	LBS.
15"	2'-11"	2'-8"	8'-0"	8'-3"	N/A	N/A	N/A	3,484
18"	3'-2"	2'-11"	8'-8"	8'-11 1/4"	N/A	N/A	N/A	4,228
24"	3'-9"	3'-6"	11'-0"	11'-4"	N/A	N/A	N/A	6,303
30"	4'-5"	4'-1"	13'-8"	14'-1"	6'-1"	N/A	137	9,083
36"	5'-0"	4'-8"	16'-0"	16'-5 3/8"	8'-2 1/2"	N/A	160	12,058
42"	5'-6"	5'-3"	18'-0"	18'-6 5/8"	9'-2 7/8"	N/A	180	15,073
48"	6'-1"	5'-10"	20'-4"	20'-11 1/2"	10'-3 1/4"	N/A	203	18,910

DIMENSIONS & QUANTITIES FOR ONE ENDWALL 6:1

PIPE DIA. (D)	CONCRETE ENDWALL DIMENSIONS				GRATE DISPLACEMENT DIMENSIONS		STRUCT. STEEL	WEIGHT
	H	W	L1	L2	L3	L4	LBS.	LBS.
15"	2'-11"	2'-8"	11'-2"	11'-3 7/8"	N/A	N/A	N/A	4,737
18"	3'-2"	2'-11"	12'-8"	12'-10 1/8"	N/A	N/A	N/A	5,833
24"	3'-9"	3'-6"	16'-2"	16'-4 5/8"	N/A	N/A	N/A	8,848
30"	4'-5"	4'-1"	20'-2"	20'-5 3/8"	10'-1"	N/A	186	12,880
36"	5'-0"	4'-8"	23'-8"	23'-11 7/8"	12'-0 1/4"	N/A	217	17,186
42"	5'-6"	5'-3"	26'-8"	27'-0 3/8"	9'-1"	9'-1"	284	21,532
48"	6'-1"	5'-10"	30'-2"	30'-7"	10'-0 3/4"	10'-0 1/8"	320	27,092

STEEL PIPE GRATE DIMENSIONS

PIPE DIA.	ALL SLOPES	3:1	4:1	6:1
	WG	LG	LG	LG
30"	4'-1"	10'-10 5/8"	14'-0 1/8"	20'-4 3/4"
36"	4'-8"	12'-8 3/4"	16'-5"	23'-11 3/8"
42"	5'-3"	14'-3 3/4"	18'-5 3/4"	26'-11 7/8"
48"	5'-10"	16'-1 7/8"	20'-10 5/8"	30'-6 3/8"

INFRASTRUCTURE PRECAST, INC.
981 WEST 7TH ST., BEAVER DAM, KY. 42320
PHONE: (270) 363-2238, FAX: (270) 298-7424

TDOT TYPE "U" CROSS DRAIN ENDWALL WITH STEEL PIPE GRATE FOR 15" THROUGH 48" PIPES

DRAWING NO.: ET-TDOT-202	DATE: 03-12-26
REVIEWED BY: J.H. ROSS, PE	DRAWN BY: N. RICHARDS
WEB: WWW.ICASTINC.COM	SCALE: NTS

Job Name: 26-1678 - South Monticello Culvert Replacement
Job Location: Farragut, TN
Contractor: Adams Contracting

Plant: 100
6/11/2026 2:38:58 PM
Tech: Jared - F
PC: M. Sullivan

Structure ID: 2 HW-2

P1 HWTDOT3-1TU42 42" - HW TDOT 3:1 Type U Cross Drain Endwall

THIS DRAWING IS THE PROPERTY OF INFRASTRUCTURE PRECAST, INC. ANY USE OR DUPLICATION OF THIS DRAWING WITHOUT PRIOR AUTHORIZATION IS STRICTLY PROHIBITED.

Job Name: 25-3062 Portland Bypass Job Location: Portland, TN Contractor: Scotty's Contracting & Stone, LLC	Plant: Beaver Dam 6/1/2026 12:50:53 PM	Tech: J. Coppage PC: C. Goff	

Structure ID: EW-15 494+00.00

P1 HWTDOT4-1TU18 **18" - HW TDOT 4:1 Type U Cross Drain Endwall**

GENERAL NOTES:

1. MANUFACTURED TO ASTM C-913 (LATEST REVISION).
2. CONCRETE: 5,000 PSI AT 28 DAYS.
3. WEIGHT: 4,320 LBS
4. REINFORCING: SEE SHEETS 2 AND 3 FOR REINFORCEMENT INFORMATION. (GRADE 60) REFERENCE TDOT DWG D-PE-18B

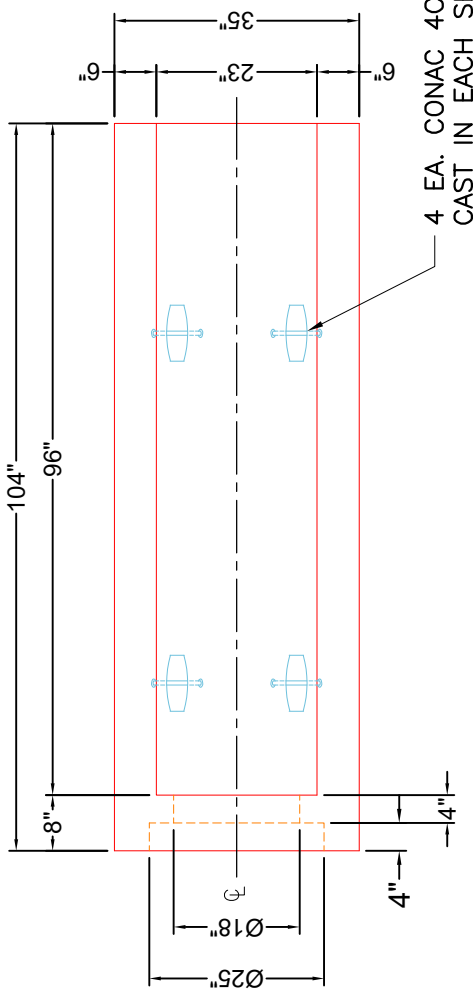

PLAN VIEW

4 EA. CONAC 4CA14 ANCHORS CAST IN EACH SECTION AS SHOWN FOR PLANT & FIELD HANDLING.

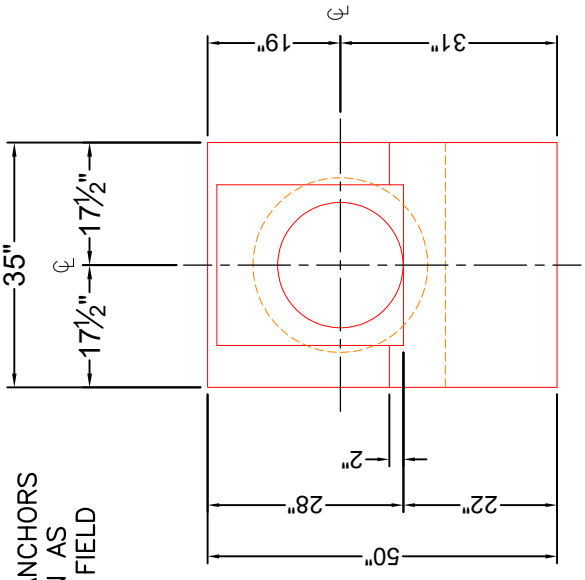

FRONT ELEVATION

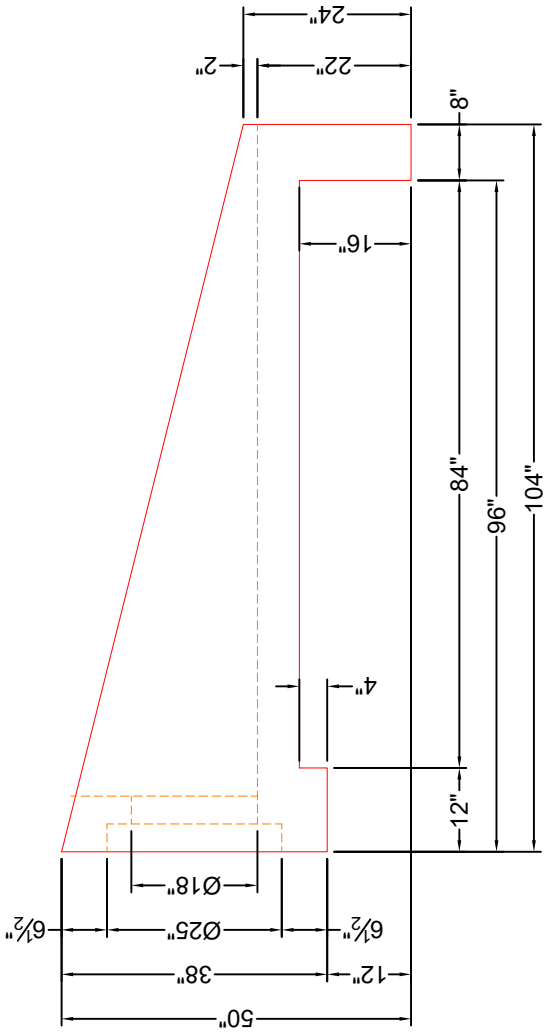

SIDE ELEVATION

Job Name: 25-3062 Portland Bypass Job Location: Portland, TN Contractor: Scotty's Contracting & Stone, LLC	Plant: Beaver Dam 6/1/2026 12:50:53 PM	Tech: J. Coppage PC: C. Goff	

Structure ID: EW-15 494+00.00

P1 HWTDOT4-1TU18 **18" - HW TDOT 4:1 Type U Cross Drain Endwall**

GENERAL NOTES:

1. MANUFACTURED TO ASTM C-913 (LATEST REVISION).
2. CONCRETE: 5,000 PSI AT 28 DAYS.
3. WEIGHT: 4,320 LBS
4. REINFORCING: SEE SHEETS 2 AND 3 FOR REINFORCEMENT INFORMATION. (GRADE 60)

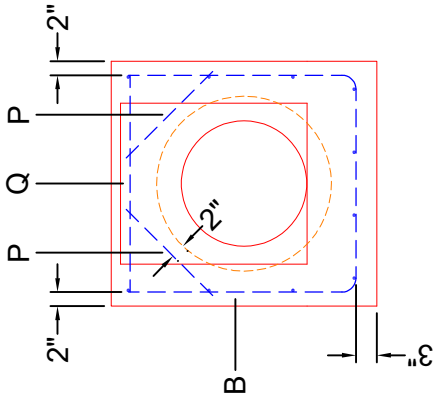

BACK WALL REBAR LAYOUT

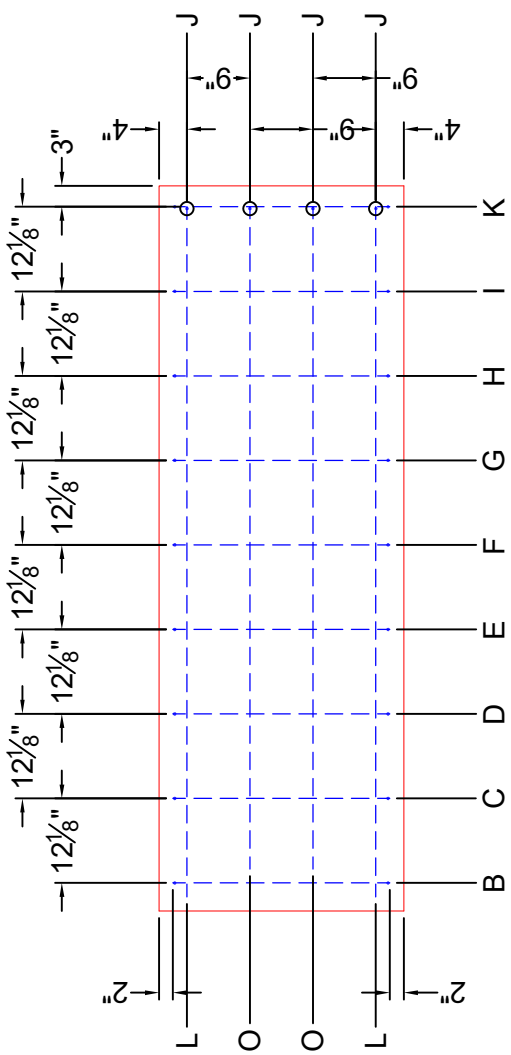

MAT REBAR LAYOUT

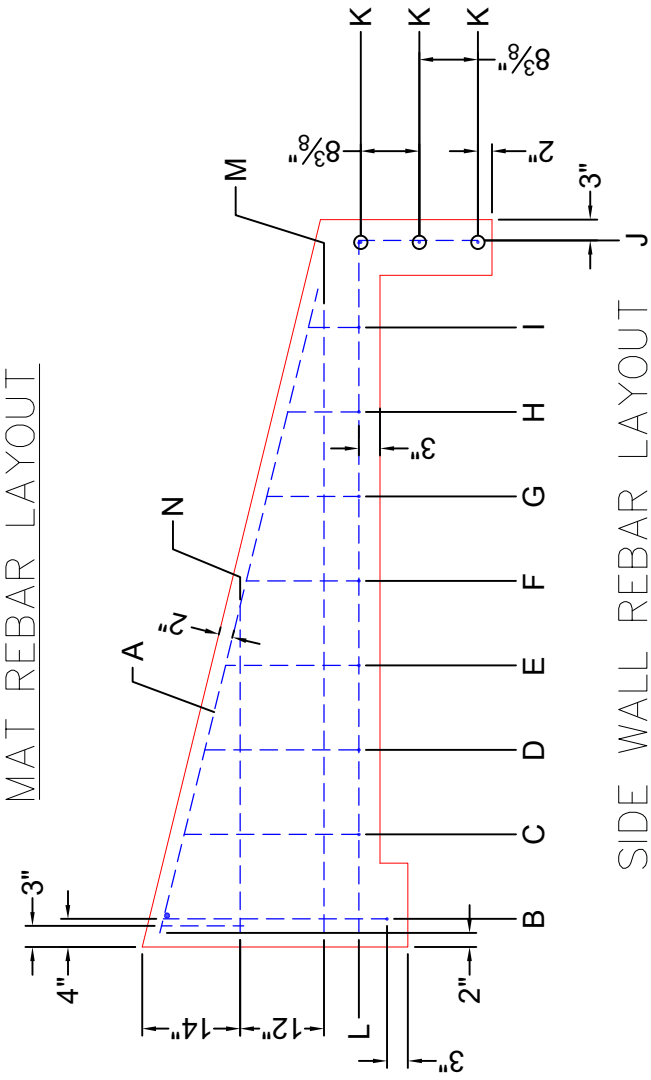

SIDE WALL REBAR LAYOUT

Job Name: 25-3062 Portland Bypass Job Location: Portland, TN Contractor: Scotty's Contracting & Stone, LLC	Plant: Beaver Dam 6/1/2026 12:50:53 PM	Tech: J. Coppage PC: C. Goff	

Structure ID: EW-15 494+00.00

P1 HWTDOT4-1TU18 **18" - HW TDOT 4:1 Type U Cross Drain Endwall**

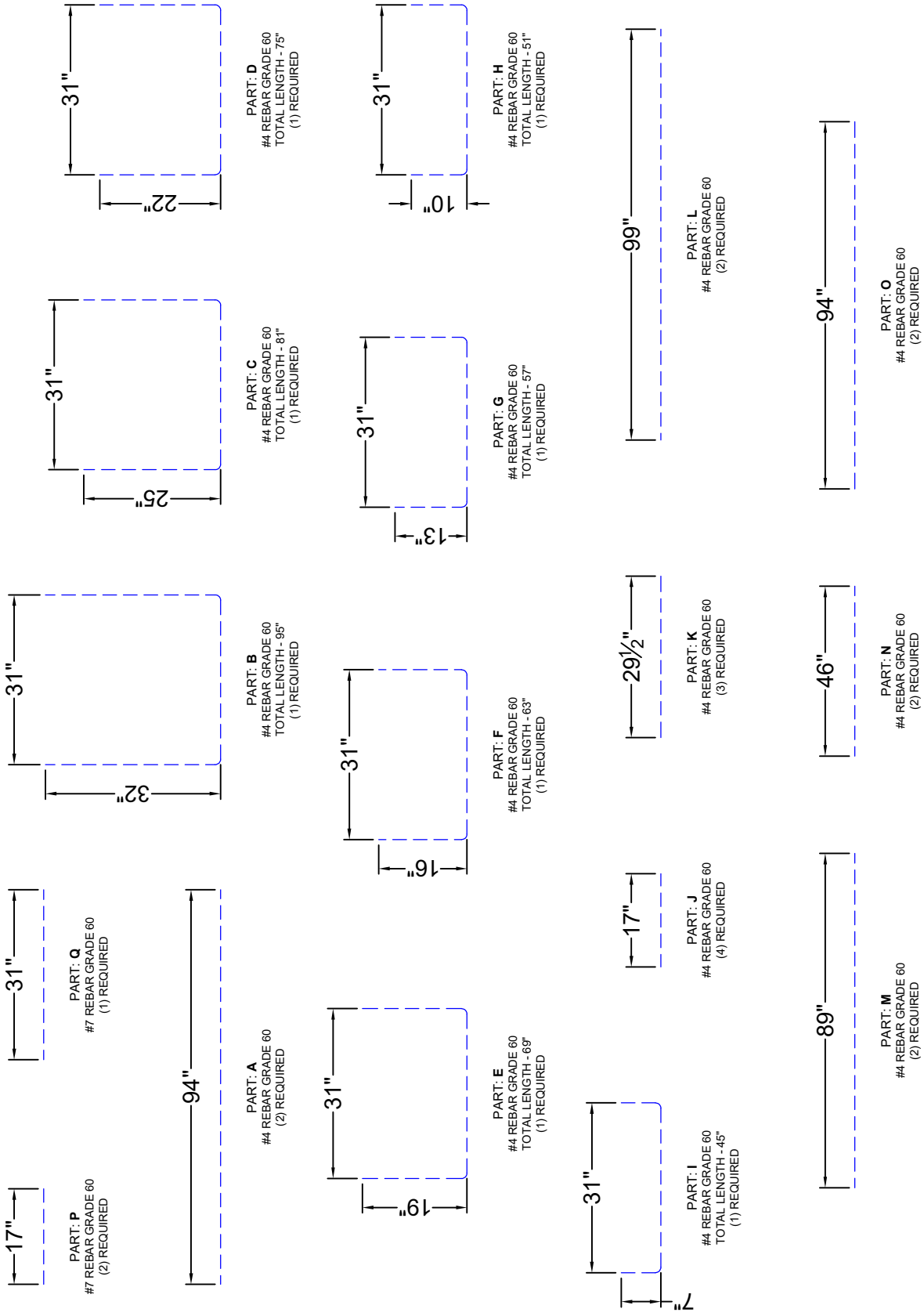

NOTE:
REBAR PARTS P & Q ARE
#7 REBAR ALL OTHERS ARE
#4 REBAR

Job Name: 25-3062 Portland Bypass Job Location: Portland, TN Contractor: Scotty's Contracting & Stone, LLC	Plant: Beaver Dam 6/1/2026 12:50:54 PM	Tech: J. Coppage PC: C. Goff	

Structure ID: EW-10 459+05.00

P1 HWTDOT12-1SA18 **18" - HW TDOT 12:1 Type Safety Side Drain Endwall**

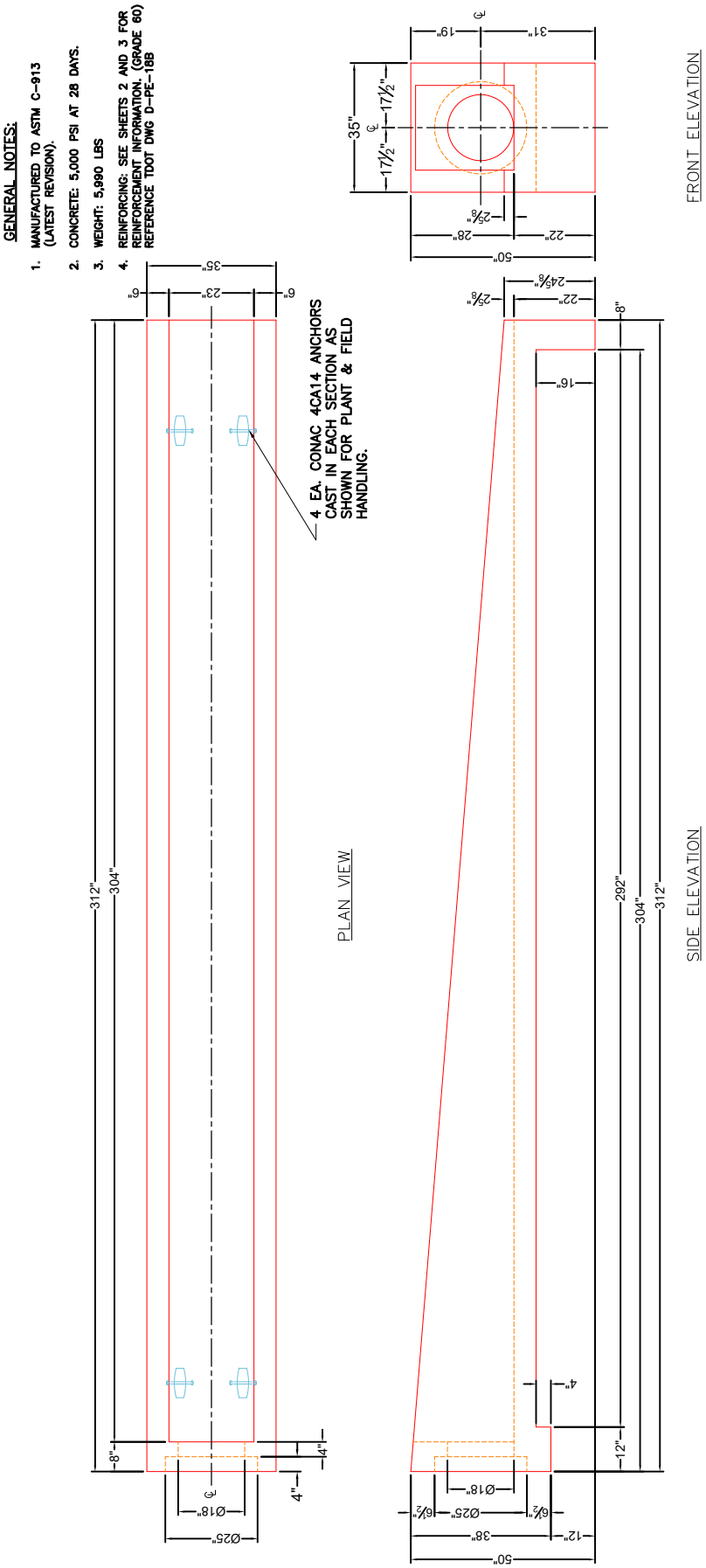

Job Name: 25-3062 Portland Bypass Job Location: Portland, TN Contractor: Scotty's Contracting & Stone, LLC	Plant: Beaver Dam 6/1/2026 12:50:54 PM	Tech: J. Coppage PC: C. Goff	

Structure ID: EW-10 459+05.00

P1 HWTDOT12-1SA18 18" - HW TDOT 12:1 Type Safety Side Drain Endwall

GENERAL NOTES:

1. MANUFACTURED TO ASTM C-913 (LATEST REVISION).
2. CONCRETE: 5,000 PSI AT 28 DAYS.
3. WEIGHT: 5,990 LBS
4. REINFORCING: SEE SHEETS 2 AND 3 FOR REINFORCEMENT INFORMATION. (GRADE 60) REFRENCE TDOT DWG D-PE-18B

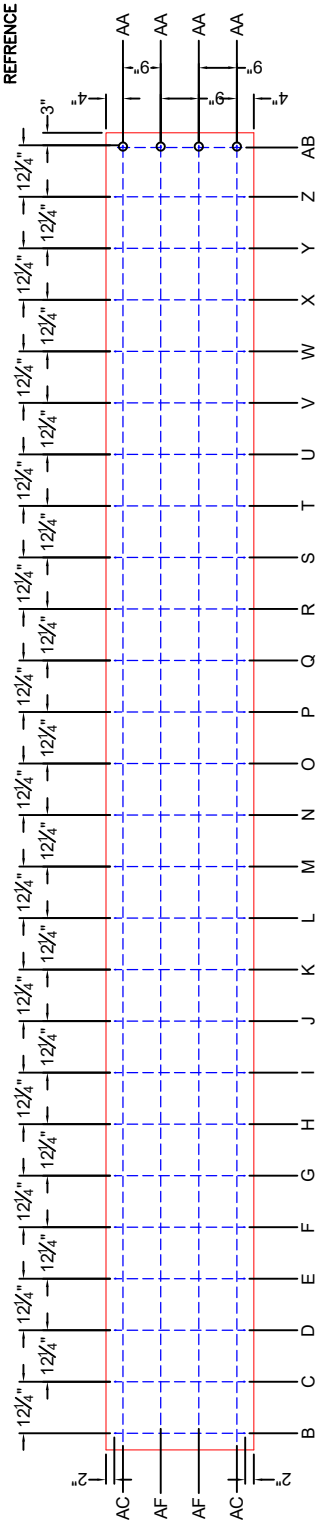

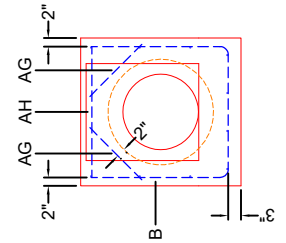

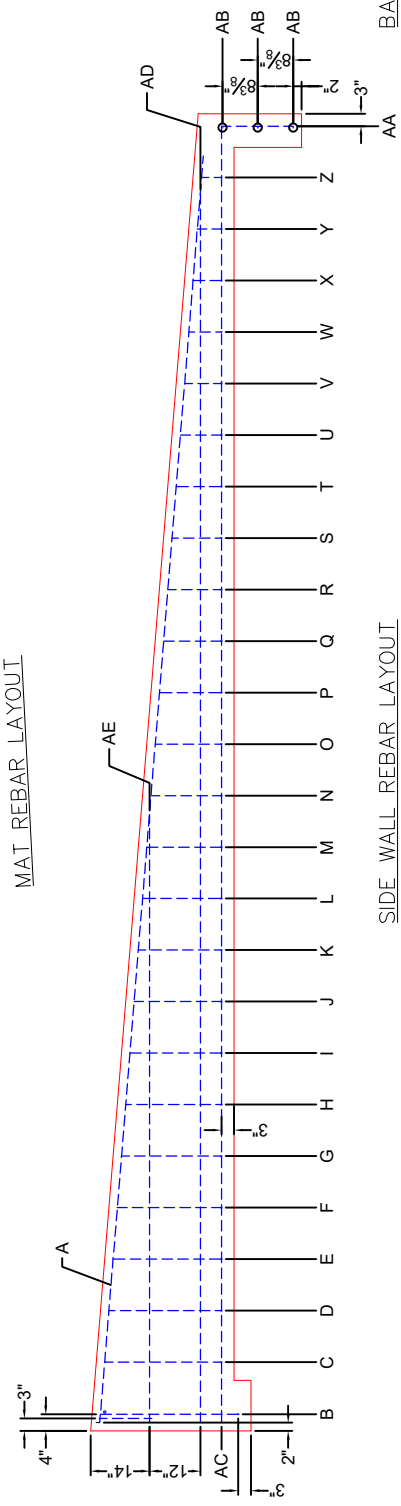

Job Name: 25-3062 Portland Bypass Job Location: Portland, TN Contractor: Scotty's Contracting & Stone, LLC	Plant: Beaver Dam 6/1/2026 12:50:54 PM	Tech: J. Coppage PC: C. Goff	

Structure ID: EW-10 459+05.00

P1 HWTDOT12-1SA18 18" - HW TDOT 12:1 Type Safety Side Drain Endwall

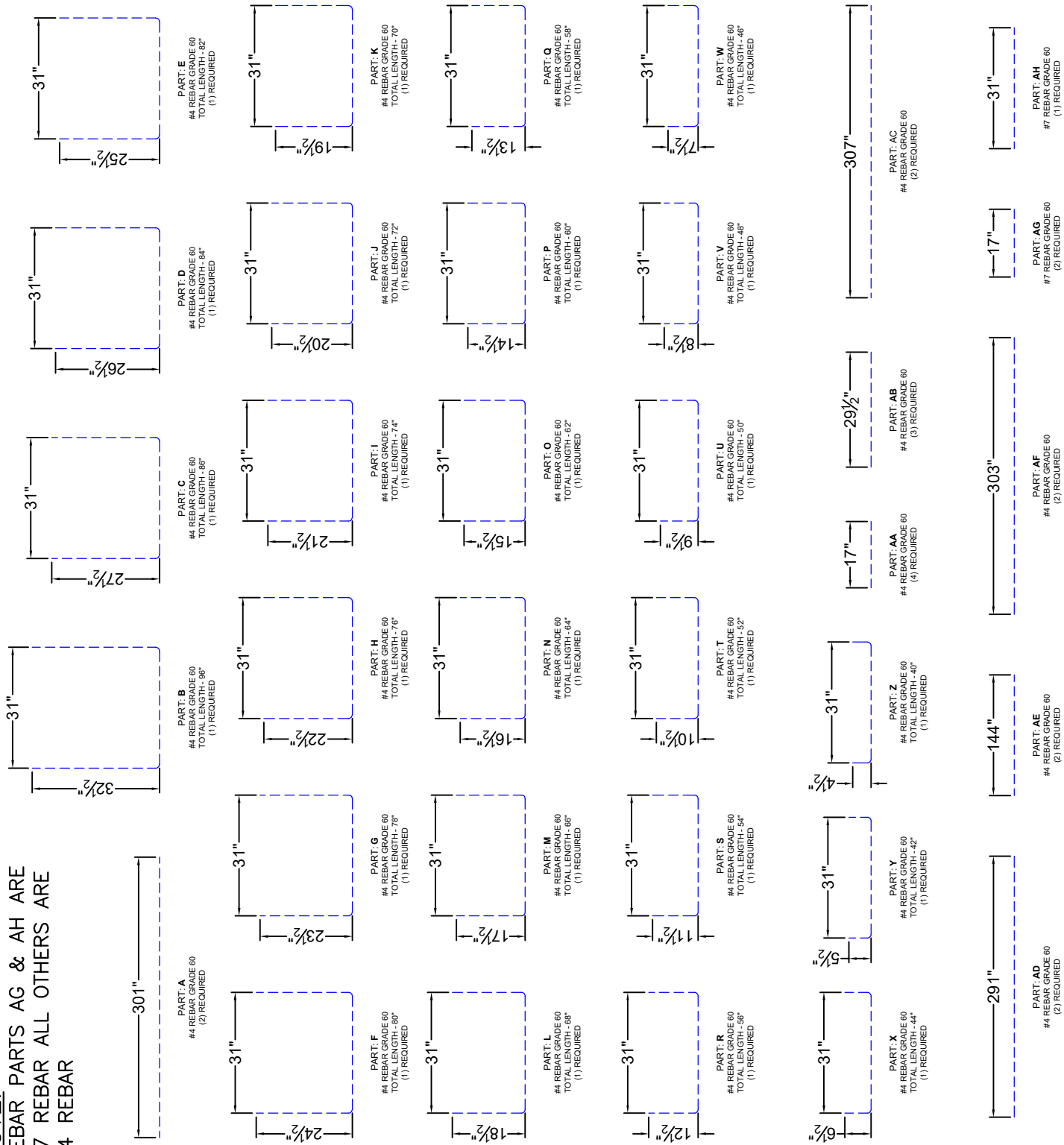

NOTE:
REBAR PARTS AG & AH ARE #7 REBAR
ALL OTHERS ARE #4 REBAR

Job Name: 25-2471 - Texas Roadhouse Job Location: Danville, KY Contractor: McCain Bros Excavating LLC	Plant: 100 6/11/2026 11:35:21 AM	Tech: Jared - F PC: M. Sullivan	

Structure ID: 5

P1 BX036096-08BAVF BOX BASE 8inW, 8inF F/n

P3) 18" x 36" - CASTING HEIGHT - 5.5"	0 lb
P2) 36" x 96" - BX FLAT TOP 8inW w/(2) 18"x36" HOLES F/F - 8"	3042 lb
P1) 36" x 96" - BOX BASE 8inW, 8inF F/n - 42"	11437 lb
1) 36" x 96" - Conseal CS-102 1.00"	0 lb
1) 18" x 36" - Conseal CS-102 1.00"	0 lb
2) Hole - 24	0 lb
1) Hole - 20	0 lb
Structure Total:	14479 lb

Structure Notes: .
1. PER ASTM C913 SPECIFICATIONS.
2. CONCRETE = 4,000 PSI AT 28 DAYS.
3. NO STEPS AND NO INVERT CHANNEL.
4. CASTING SUPPLIED BY OTHERS (2ea. HOE 580-A F/G)

.
REINFORCING PER ASTM A615 (GRADE 60).
- TOP SLAB (As .62) #5 BARS AT 6" C.C.E.W.
- WALLS (As .12) #5 BARS AT 12" C.C.E.W.
- FLOOR (As .12) #5 BARS AT 12" C.C.E.W.

Rim: 1034.75' Rim to Invert: 4.69' Slack: 0.78" Sump: 0" Step Position:

Position	Elev	Angle	Ext. (cw)	Pipe	Pipe OD	Connector	Hole	Horz Size	Up (_)	Offset
Invert 1	1030.06'	90°	56"	18" HDPE	21.2"	Hole 24	24"	24"	-1.625"	0"
Invert 2	1030.06'	180°	26"	18" HDPE	21.2"	Hole 24	24"	24"	-1.625"	0"
Invert 3	1030.06'	0°	26"	15" HDPE	17.6"	Hole 20	20"	20"	-1.25"	0"
Invert 4										
Invert 5										
Invert 6										
Invert 7										
Invert 8										

RIGHT-SIDE UP VIEW (int. dimensions)

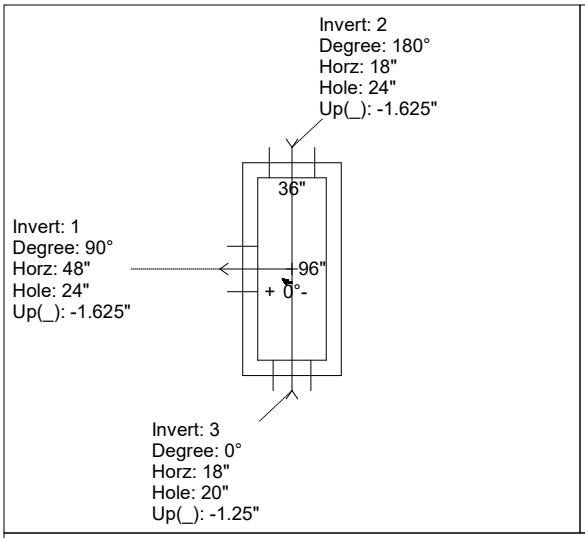

UPSIDE-DOWN VIEW (int. dimenions)

1ST POUR (FLOOR) = 3,909 LBS
2ND POUR (WALLS) = 7,528 LBS

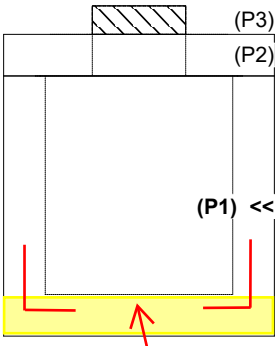

1ST POUR (FLOOR) STUB #5 L BARS OUT TOP FLOOR, SPA AT 12" C/C FOR CONNECTING WALLS

INSIDE WALL DIMENSIONS

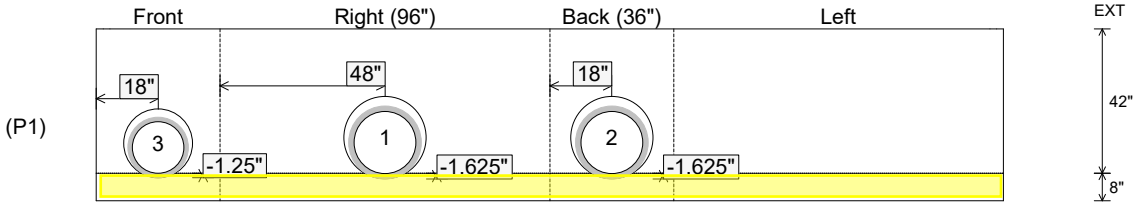

Coating (Int): Coating (Ext):	Seam Up: Flat Seam Dn: n/a	Wall Thickness: 8" Floor Height: 8"	Height (Int): 42" Height (Ext): 50"	Weight (Net): 11437 lb Volume (Net): 2.92cu.yd

Job Name: 25-2471 - Texas Roadhouse Job Location: Danville, KY Contractor: McCain Bros Excavating LLC	Plant: 100 6/11/2026 11:35:21 AM	Tech: Jared - F PC: M. Sullivan	

Structure ID: 5

P1 BX036096-08BAVF BOX BASE 8inW, 8inF F/n

P3) 18" x 36" - CASTING HEIGHT - 5.5"	0 lb
P2) 36" x 96" - BX FLAT TOP 8inW w/(2) 18"x36" HOLES F/F - 8"	3042 lb
P1) 36" x 96" - BOX BASE 8inW, 8inF F/n - 42"	11437 lb
1) 36" x 96" - Conseal CS-102 1.00"	0 lb
1) 18" x 36" - Conseal CS-102 1.00"	0 lb
2) Hole - 24	0 lb
1) Hole - 20	0 lb
Structure Total:	14479 lb

Structure Notes: .
1. PER ASTM C913 SPECIFICATIONS.
2. CONCRETE = 4,000 PSI AT 28 DAYS.
3. NO STEPS AND NO INVERT CHANNEL.
4. CASTING SUPPLIED BY OTHERS (2ea. HOE 580-A F/G)

.
REINFORCING PER ASTM A615 (GRADE 60).
- TOP SLAB (As .62) #5 BARS AT 6" C.C.E.W.
- WALLS (As .12) #5 BARS AT 12" C.C.E.W.
- FLOOR (As .12) #5 BARS AT 12" C.C.E.W.

Rim: 1034.75' Rim to Invert: 4.69' Slack: 0.78" Sump: 0" Step Position:

Position	Elev	Angle	Ext. (cw)	Pipe	Pipe OD	Connector	Hole	Horz Size	Up (_)	Offset
Invert 1	1030.06'	90°	56"	18" HDPE	21.2"	Hole 24	24"	24"	-1.625"	0"
Invert 2	1030.06'	180°	26"	18" HDPE	21.2"	Hole 24	24"	24"	-1.625"	0"
Invert 3	1030.06'	0°	26"	15" HDPE	17.6"	Hole 20	20"	20"	-1.25"	0"
Invert 4										
Invert 5										
Invert 6										
Invert 7										
Invert 8										

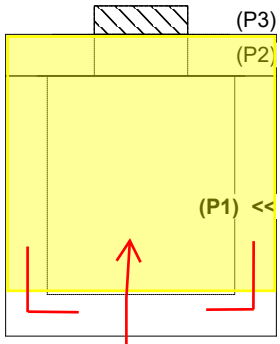

2ND POUR (WALLS)

RIGHT-SIDE UP VIEW (int. dimensions)

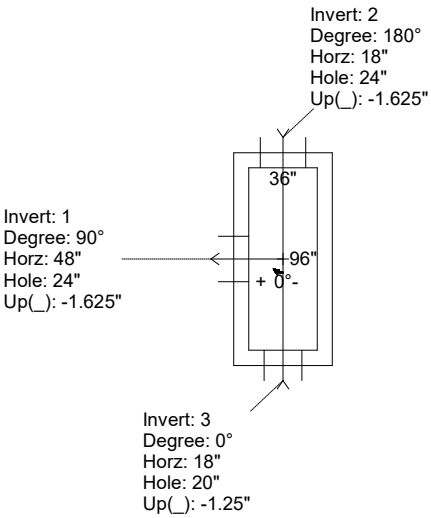

UPSIDE-DOWN VIEW (int. dimenions)

1ST POUR (FLOOR) = 3,909 LBS
2ND POUR (WALLS) = 7,528 LBS

INSIDE WALL DIMENSIONS

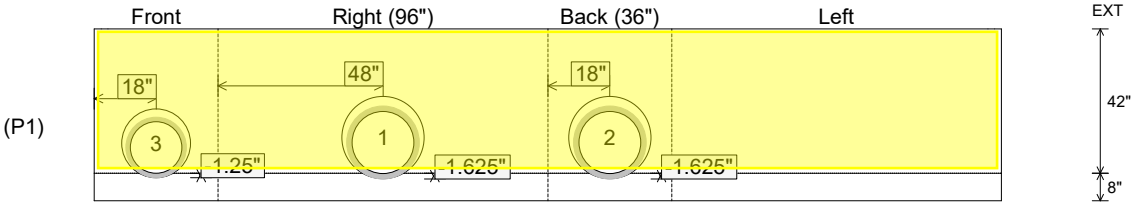

Coating (Int): Coating (Ext):	Seam Up: Flat Seam Dn: n/a	Wall Thickness: 8" Floor Height: 8"	Height (Int): 42" Height (Ext): 50"	Weight (Net): 11437 lb Volume (Net): 2.92cu.yd

Job Name: 25-2471 - Texas Roadhouse Job Location: Danville, KY Contractor: McCain Bros Excavating LLC	Plant: 100 6/11/2026 11:35:52 AM	Tech: Jared - F PC: M. Sullivan	

Structure ID: 5

P2 BX036096-08LD08S **BX FLAT TOP 8inW w/(2) 18"x36" HOLES F/F**

P3) 18" x 36" - CASTING HEIGHT - 5.5"	0 lb
P2) 36" x 96" - BX FLAT TOP 8inW w/(2) 18"x36" HOLES F/F - 8"	3042 lb
P1) 36" x 96" - BOX BASE 8inW, 8inF F/n - 42"	11437 lb
1) 36" x 96" - Conseal CS-102 1.00"	0 lb
1) 18" x 36" - Conseal CS-102 1.00"	0 lb
2) Hole - 24	0 lb
1) Hole - 20	0 lb
Structure Total:	14479 lb

Structure Notes: .
1. PER ASTM C913 SPECIFICATIONS.
2. CONCRETE = 4,000 PSI AT 28 DAYS.
3. NO STEPS AND NO INVERT CHANNEL.
4. CASTING SUPPLIED BY OTHERS (2ea. HOE 580-A F/G)

.
REINFORCING PER ASTM A615 (GRADE 60).
- TOP SLAB (As .62) #5 BARS AT 6" C.C.E.W.
- WALLS (As .12) #5 BARS AT 12" C.C.E.W.
- FLOOR (As .12) #5 BARS AT 12" C.C.E.W.

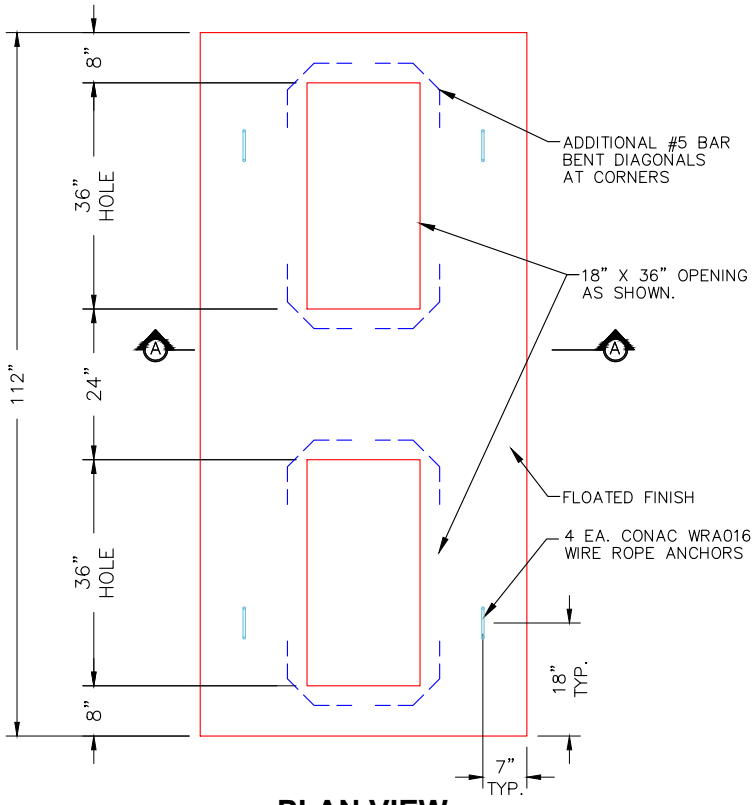

PLAN VIEW

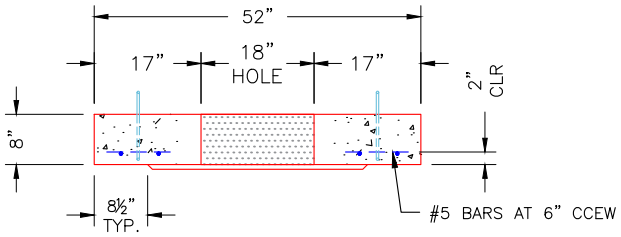

SECTION A-A

NOTES:

1. MANUFACTURED TO ASTM C-913 (LATEST REVISION).
2. CONCRETE: 4,000 PSI AT 28 DAYS.
3. REINFORCING: #5 BAR @ 6" O.C. E.W. (GRADE 60).

Coating (Int): Coating (Ext):	Seam Up: Flat Seam Dn: Flat	Wall Thickness: 8"	Height (Ext): 8"	Weight (Net): 3042 lb Volume (Net): 0.78cu.yd

Job Name: 25-3195 - The Banks Lift Station and Forcemain Job Location: Gallatin, TN Contractor: W&O Construction	Plant: 100 5/28/2026 6:53:09 PM	Tech: Jared - F PC: A. Chambers	

Structure ID: VAULT w/METER

P1 BX4848-08BAVF-CDARED BOX BASE 8inW, 8inF, Variable Ht w/CONBLOCK CDA RED F/n

P3) 24" x 24" - HATCH (CAST FLUSH) - 3"	100 lb
P2) 48" x 48" - CB FLAT TOP 8"W w/24"X24" Hatch w/ConBlock-CDA Red F/F - 8"	2363 lb
P1) 48" x 48" - BOX BASE 8inW, 8inF, Variable Ht w/CONBLOCK CDA RED F/n - 56"	11019 lb
1) JOINT WRAP - 0.065"x6"x50' CONSEAL CS212	0 lb
1) JOINT WRAP PRIMER - CONSEAL CS-75 (1 gal.)	0 lb
1) ADMIXTURE CONBLOCK CDA RED	0 lb
1) HATCH (Alum.) - HALLIDAY W1S 24"x24"	46 lb
1) 48" x 48" - Conseal CS-231 1.00" (Double)	0 lb
1) 24" x 24" - Conseal CS-231 1.00" (Double)	0 lb
2) PSX - 12M NYLO	16 lb
Structure Total:	13543 lb

Structure Notes: .
1. PER ASTM C478 SPECIFICATIONS.
2. CONCRETE = 5,000 PSI AT 28 DAYS.
3. ADMIXTURE = CONBLOCK CDA RED.
4. HATCH SUPPLIED BY ICAST (HALLIDAY W1S 24"x24").

.
REINFORCING PER ASTM A615 (GRADE 60).
- TOP SLAB (As .47) #5 BARS AT 6" C.C.E.W.
- WALLS (As .47) #5 BARS AT 8" C.C.E.W.
- FLOOR (As .47) #5 BARS AT 8" C.C.E.W.

Rim: 458.5' Rim to Invert: 3.25' Slack: -0.04" Sump: 24.96" Step Position:

Position	Elev	Angle	Ext. (cw)	Pipe	Pipe OD	Connector	Hole	Horz Size	Up (_)	Offset
Invert 1	455.25'	0°	41"	8" DI	9"	PSX 12M NYLO	12"	12"	23"	9"
Invert 2	455.25'	180°	23"	8" DI	9"	PSX 12M NYLO	12"	12"	23"	-9"
Invert 3										
Invert 4										
Invert 5										
Invert 6										
Invert 7										
Invert 8										

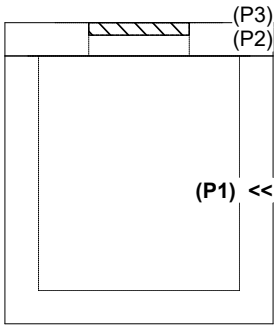

RIGHT-SIDE UP VIEW (int. dimensions)

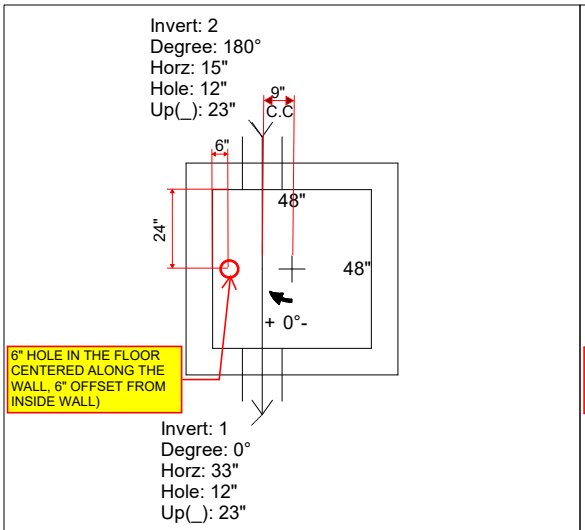

UPSIDE-DOWN VIEW (int. dimenions)

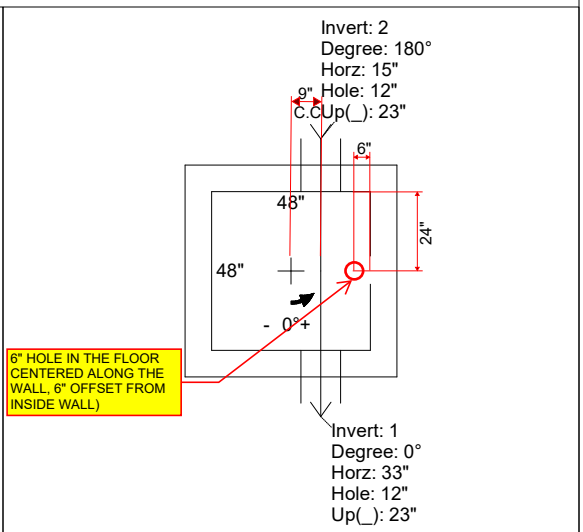

INSIDE WALL DIMENSIONS

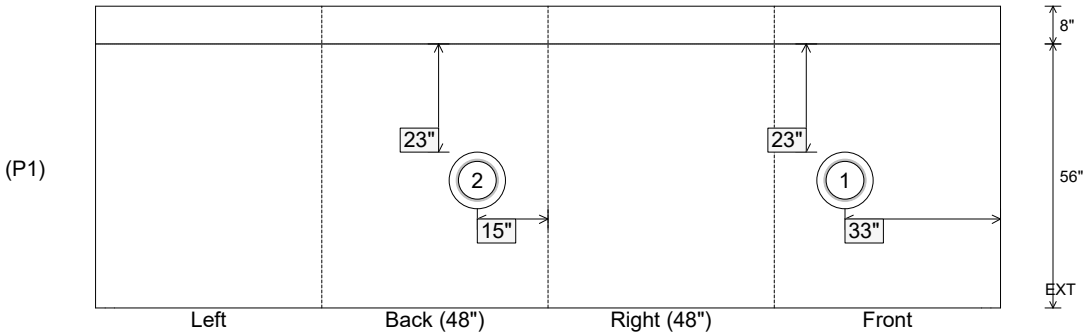

Coating (Int): Coating (Ext):	Seam Up: Flat Seam Dn: n/a	Wall Thickness: 8" Floor Height: 8"	Height (Int): 56" Height (Ext): 64"	Weight (Net): 11019 lb Volume (Net): 2.81cu.yd

GENERAL NOTES:

1. MANUFACTURED PER ASTM C-913 (LATEST REVISION).
2. CONCRETE : 4,500 PSI AT 28 DAYS.
3. REINFORCING: PER ASTM 615 (GRADE 60).
   - WALLS/FLOOR (As. 12) #5 BAR @ 12" C.C.E.W.
4. WEIGHTS: TOTAL = 16,570 LBS
   FIRST POUR = 3,675 LBS.
   SECOND POUR = 10,135 LBS
   BAFFLE = 1,380 LBS
   WEIR = 1,380 LBS
5. JOINT SEALED WITH CONCRETE SEALANTS CS-102. (SUPPLIED BY ICAST).

FIRST POUR DRAWING (FLOOR)

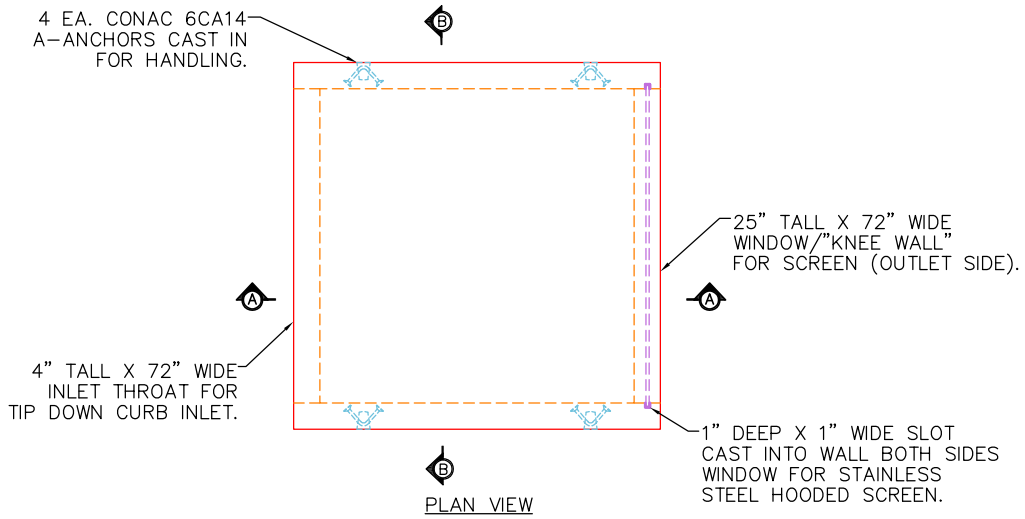

PLAN VIEW

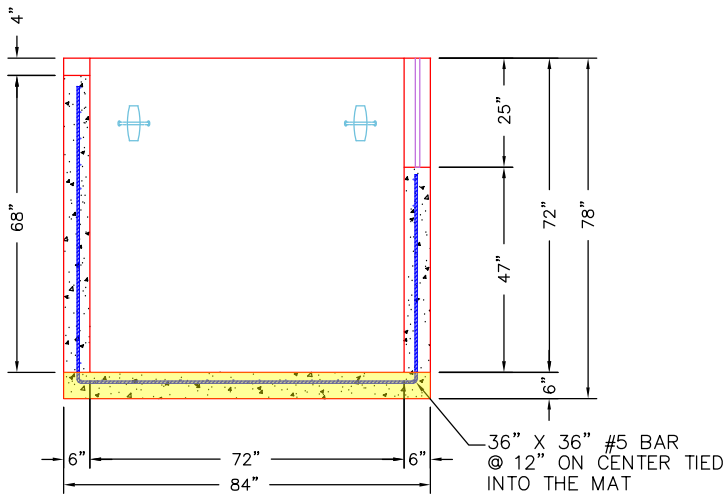

SECTION A-A

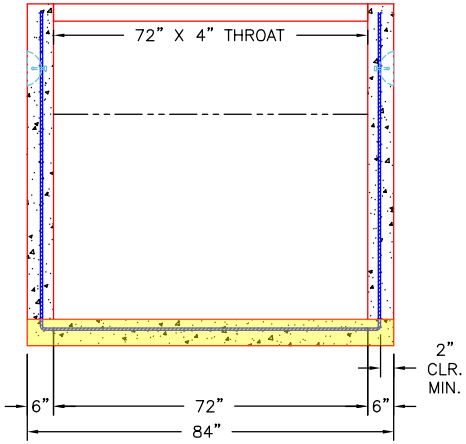

SECTION B-B

PRODUCTION WORK ORDER	PRODUCT I.D.: BX072072-08BA-VH	DESCRIPTION: 72" X 72" X 72" TALL PRETX CURB INLET	
QUALITY CONTROL CHECKLIST	PRODUCT VIEW: RIGHT SIDE UP	CUSTOMER: CONVERGENT WATER TECHNOLOGIES	
☐ ALL DIMENSIONS CORRECT.	PLANT: BEAVER DAM, KY.	PROJECT: PRETX CURB INLET	
☐ LIFTERS INSTALLED.	WEIGHT: 16,570 LBS	STRUCTURE I.D.: QL1	
☐ OPENING CENTERED.	TOP SECTION JOINT: N/A	SALES ORDER NO.: 26-2562	
☐ REINFORCING CORRECT.	BASE SECTION JOINT: N/A	P.C.: C. GOFF	DRAWING: S. FELLETTER
☐ SURFACE QUALITY ACCEPTABLE.	QC CHECK INITIALS:	DATE: 06/09/26	SCALE: NTS / PG. 1 of 4
☐ EDGES CHAMFERED.			
☐ ALL PATCHWORK ACCEPTABLE.			

THIS DRAWING IS THE PROPERTY OF INFRASTRUCTURE PRECAST, INC. ANY USE OR DUPLICATION OF THIS DRAWING WITHOUT PRIOR AUTHORIZATION IS STRICTLY PROHIBITED.

GENERAL NOTES:

1. MANUFACTURED PER ASTM C-913 (LATEST REVISION).
2. CONCRETE : 4,500 PSI AT 28 DAYS.
3. REINFORCING: PER ASTM 615 (GRADE 60).
   - WALLS/FLOOR (As. 12) #5 BAR @ 12" C.C.E.W.
4. WEIGHTS: TOTAL = 16,570 LBS
   FIRST POUR = 3,675 LBS.
   SECOND POUR = 10,135 LBS
   BAFFLE = 1,380 LBS
   WEIR = 1,380 LBS
5. JOINT SEALED WITH CONCRETE SEALANTS CS-102. (SUPPLIED BY ICAST).

SECOND POUR DRAWING (WALLS)

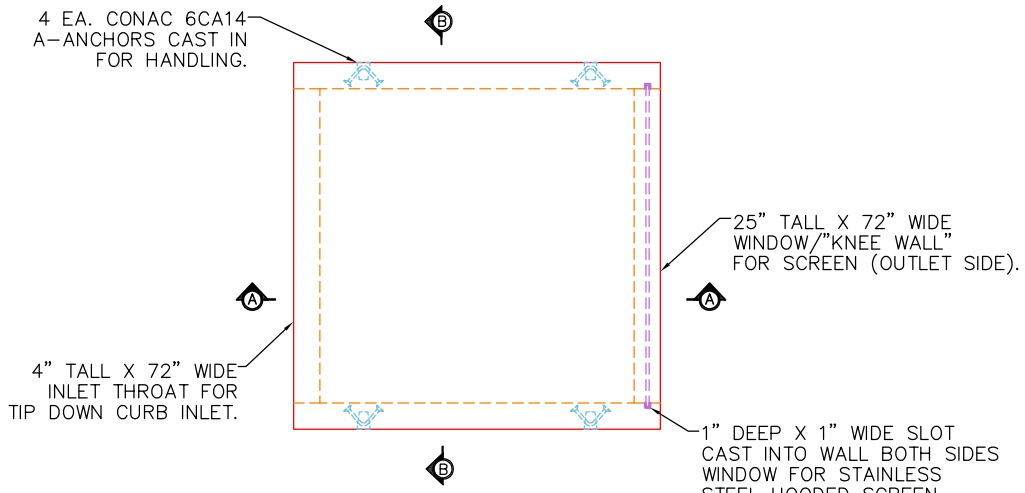

PLAN VIEW

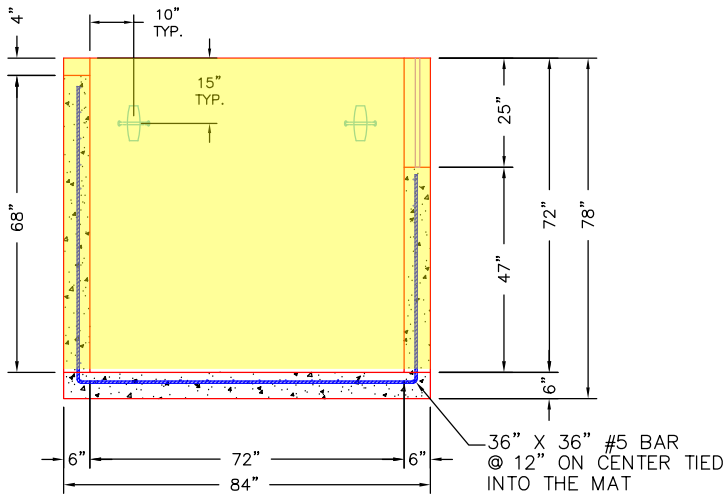

SECTION A-A

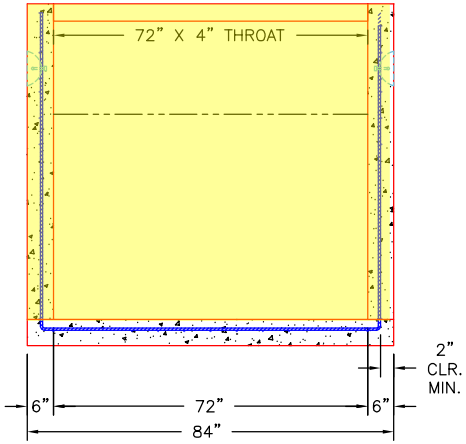

SECTION B-B

PRODUCTION WORK ORDER	PRODUCT I.D.: BX072072-08BA-VH	DESCRIPTION: 72" X 72" X 72" TALL PRETX CURB INLET	
QUALITY CONTROL CHECKLIST	PRODUCT VIEW: RIGHT SIDE UP	CUSTOMER: CONVERGENT WATER TECHNOLOGIES	
☐ ALL DIMENSIONS CORRECT.	PLANT: BEAVER DAM, KY.	PROJECT: PRETX CURB INLET	
☐ LIFTERS INSTALLED.	WEIGHT: 16,570 LBS	STRUCTURE I.D.: QL1	
☐ OPENING CENTERED.	TOP SECTION JOINT: N/A	SALES ORDER NO.: 26-2562	
☐ REINFORCING CORRECT.	BASE SECTION JOINT: N/A	P.C.: C. GOFF	DRAWING: S. FELLETTER
☐ SURFACE QUALITY ACCEPTABLE.	QC CHECK INITIALS:	DATE: 06/09/26	SCALE: NTS / PG. 2 of 4
☐ EDGES CHAMFERED.			
☐ ALL PATCHWORK ACCEPTABLE.			

THIS DRAWING IS THE PROPERTY OF INFRASTRUCTURE PRECAST, INC. ANY USE OR DUPLICATION OF THIS DRAWING WITHOUT PRIOR AUTHORIZATION IS STRICTLY PROHIBITED.

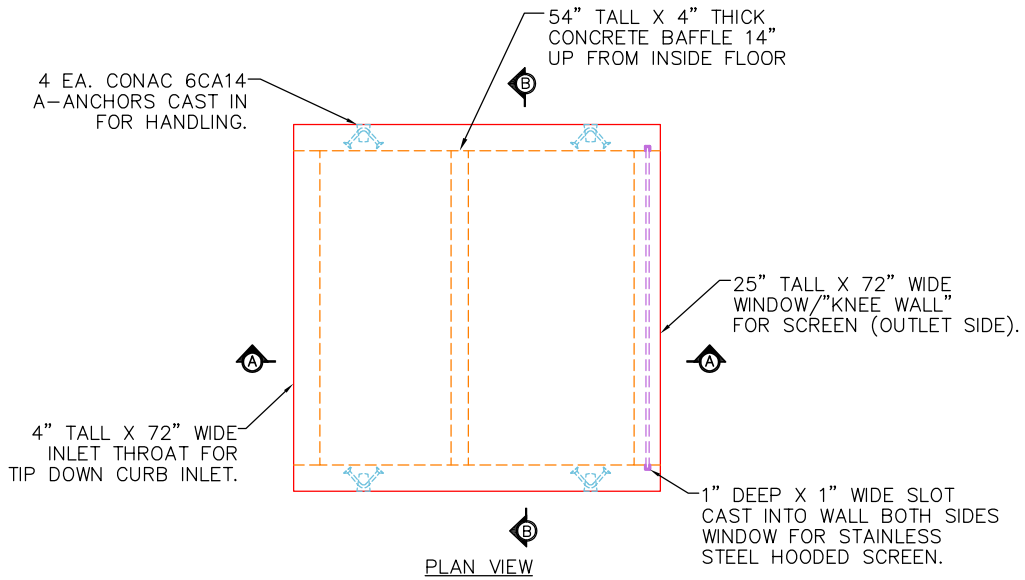

PLAN VIEW

GENERAL NOTES:

1. MANUFACTURED PER ASTM C-913 (LATEST REVISION).
2. CONCRETE : 4,500 PSI AT 28 DAYS.
3. REINFORCING: PER ASTM 615 (GRADE 60).
   - WALLS/FLOOR (As. 12) #5 BAR @ 12" C.C.E.W.
4. WEIGHTS: TOTAL = 16,570 LBS
   FIRST POUR = 3,675 LBS.
   SECOND POUR = 10,135 LBS
   BAFFLE = 1,380 LBS
   WEIR = 1,380 LBS
5. JOINT SEALED WITH CONCRETE SEALANTS CS-102. (SUPPLIED BY ICAST).

THIRD POUR DRAWING (BAFFLE)

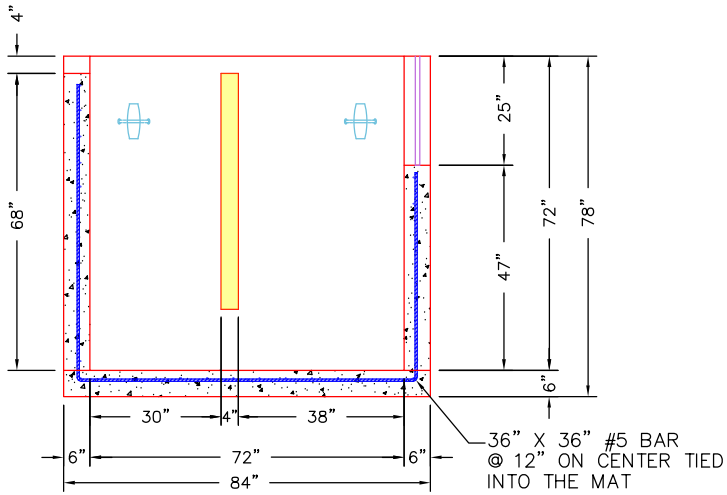

SECTION A-A

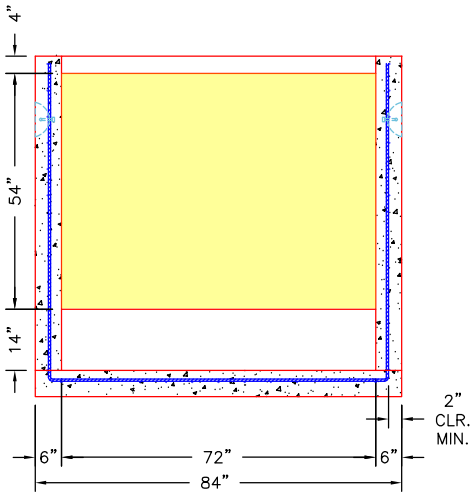

SECTION B-B

PRODUCTION WORK ORDER	PRODUCT I.D.: BX072072-08BA-VH	DESCRIPTION: 72" X 72" X 72" TALL PRETX CURB INLET	
QUALITY CONTROL CHECKLIST	PRODUCT VIEW: RIGHT SIDE UP	CUSTOMER: CONVERGENT WATER TECHNOLOGIES	
☐ ALL DIMENSIONS CORRECT.	PLANT: BEAVER DAM, KY.	PROJECT: PRETX CURB INLET	
☐ LIFTERS INSTALLED.	WEIGHT: 16,570 LBS	STRUCTURE I.D.: QL1	
☐ OPENING CENTERED.	TOP SECTION JOINT: N/A	SALES ORDER NO.: 26-2562	
☐ REINFORCING CORRECT.	BASE SECTION JOINT: N/A	P.C.: C. GOFF	DRAWING: S. FELLETTER
☐ SURFACE QUALITY ACCEPTABLE.	QC CHECK INITIALS:	DATE: 06/09/26	SCALE: NTS / PG. 3 of 4
☐ EDGES CHAMFERED.			
☐ ALL PATCHWORK ACCEPTABLE.			

THIS DRAWING IS THE PROPERTY OF INFRASTRUCTURE PRECAST, INC. ANY USE OR DUPLICATION OF THIS DRAWING WITHOUT PRIOR AUTHORIZATION IS STRICTLY PROHIBITED.

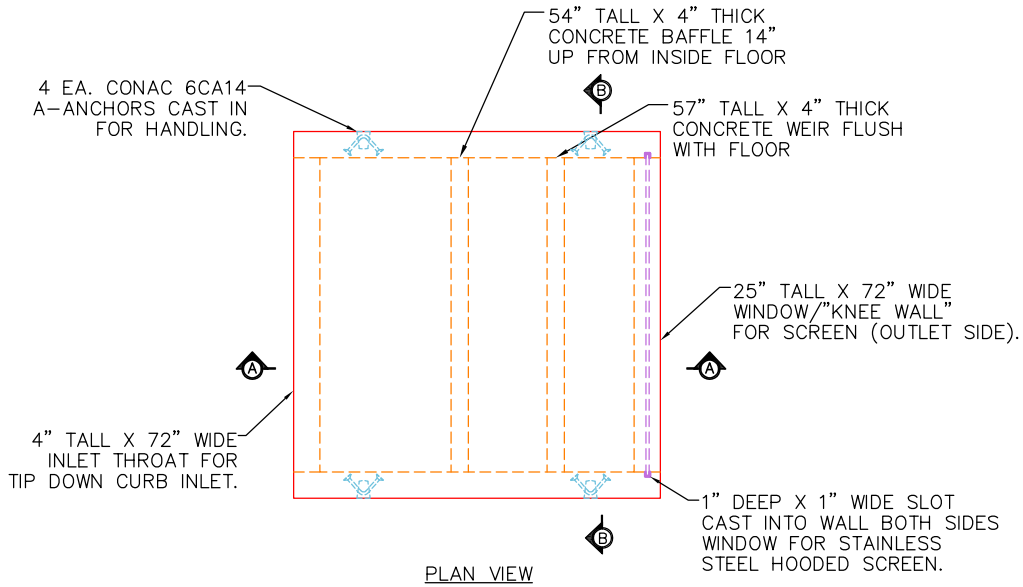

PLAN VIEW

GENERAL NOTES:

1. MANUFACTURED PER ASTM C-913 (LATEST REVISION).
2. CONCRETE : 4,500 PSI AT 28 DAYS.
3. REINFORCING: PER ASTM 615 (GRADE 60).
   - WALLS/FLOOR (As. 12) #5 BAR @ 12" C.C.E.W.
4. WEIGHTS: TOTAL = 16,570 LBS
   FIRST POUR = 3,675 LBS.
   SECOND POUR = 10,135 LBS
   BAFFLE = 1,380 LBS
   WEIR = 1,380 LBS
5. JOINT SEALED WITH CONCRETE SEALANTS CS-102. (SUPPLIED BY ICAST).

FOURTH POUR DRAWING (WEIR)

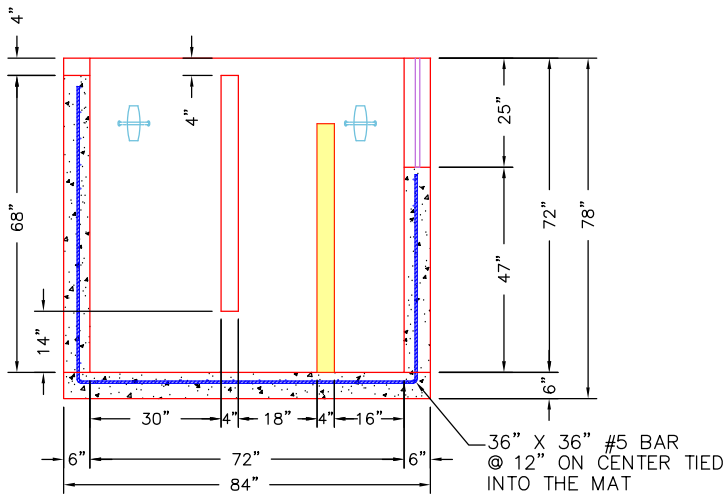

SECTION A-A

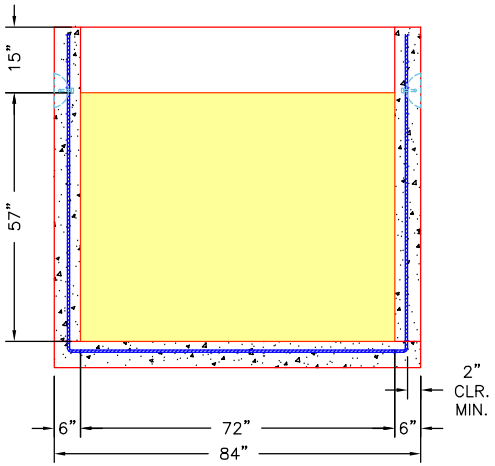

SECTION B-B

PRODUCTION WORK ORDER	PRODUCT I.D.: BX072072-08BA-VH	DESCRIPTION: 72" X 72" X 72" TALL PRETX CURB INLET	
QUALITY CONTROL CHECKLIST	PRODUCT VIEW: RIGHT SIDE UP	CUSTOMER: CONVERGENT WATER TECHNOLOGIES	
☐ ALL DIMENSIONS CORRECT.	PLANT: BEAVER DAM, KY.	PROJECT: PRETX CURB INLET	
☐ LIFTERS INSTALLED.	WEIGHT: 16,570 LBS	STRUCTURE I.D.: QL1	
☐ OPENING CENTERED.	TOP SECTION JOINT: N/A	SALES ORDER NO.: 26-2562	
☐ REINFORCING CORRECT.	BASE SECTION JOINT: N/A	P.C.: C. GOFF	DRAWING: S. FELLETTER
☐ SURFACE QUALITY ACCEPTABLE.	QC CHECK INITIALS:	DATE: 06/09/26	SCALE: NTS / PG. 4 of 4
☐ EDGES CHAMFERED.			
☐ ALL PATCHWORK ACCEPTABLE.			

THIS DRAWING IS THE PROPERTY OF INFRASTRUCTURE PRECAST, INC. ANY USE OR DUPLICATION OF THIS DRAWING WITHOUT PRIOR AUTHORIZATION IS STRICTLY PROHIBITED.

Job Name: 26-2574 - Moore Grease Traps Job Location: Clarksville, TN 37043 Contractor: Core & Main LP (Nashville)	Plant: Beaver Dam, KY 6/2/2026 4:11:05 PM	Tech: K. Cardwell PC: T. Lewis	

Structure ID: QL2 GT1000 (5)

P1 BX60120-06W06F-BA54 BOX BASE 6inW, 6inF F/n

P3) 24" - CASTING HEIGHT - 7"	0 lb
P2) 60" x 120" - CB FLAT TOP 6"W w/(2) 24" HOLES (Grease Trap) F/F - 8"	5775 lb
P1) 60" x 120" - BOX BASE 6inW, 6inF F/n - 54"	16155 lb
1) SECONDARY POUR - Baffle Wall	975 lb
1) 60" x 120" - Conseal CS-102 1.00" (Double)	0 lb
1) 24" - Conseal CS-102 1.00" (Double)	0 lb
2) PSX - 8QRS-S NYLO	13 lb
Structure Total:	22918 lb

FIRST POUR (BASE): 16,155 LBS

SECOND POUR (BAFFLE WALL): 975 LBS

Rim: 5.75' Rim to Invert: 2.667' Slack: 0" Sump: 37" Step Position:

Structure Notes:

1. PER ASTM C-890-13 & ASTM C-913 SPECIFICATIONS
2. CONCRETE: 4,500 PSI AT 28 DAYS
3. REINFORCEMENT: #5 BAR @ 8" C.C. E.W. (GRADE 60) - 2" MIN. REBAR CLEARANCE (TYP)
4. NO FLOW CHANNEL
5. 2 EA. 7" CASTINGS SUPPLIED BY OTHERS
6. LIFTERS: 4 EA. 5CA18 CONAC A-ANCHORS FOR PLANT & FIELD HANDLING - INSTALLED AS SHOWN

Position	Elev	Angle	Ext. (cw)	Pipe	Pipe OD	Connector	Hole	Horz Size	Up (_)	Offset
Invert 1	3.083'	0°	36"	4" PVC SDR35	4.25"	PSX 8QRS-S NYLO	8"	8"	35"	0"
Invert 2	3.25'	180°	36"	4" PVC SDR35	4.25"	PSX 8QRS-S NYLO	8"	8"	37"	0"
Invert 3										

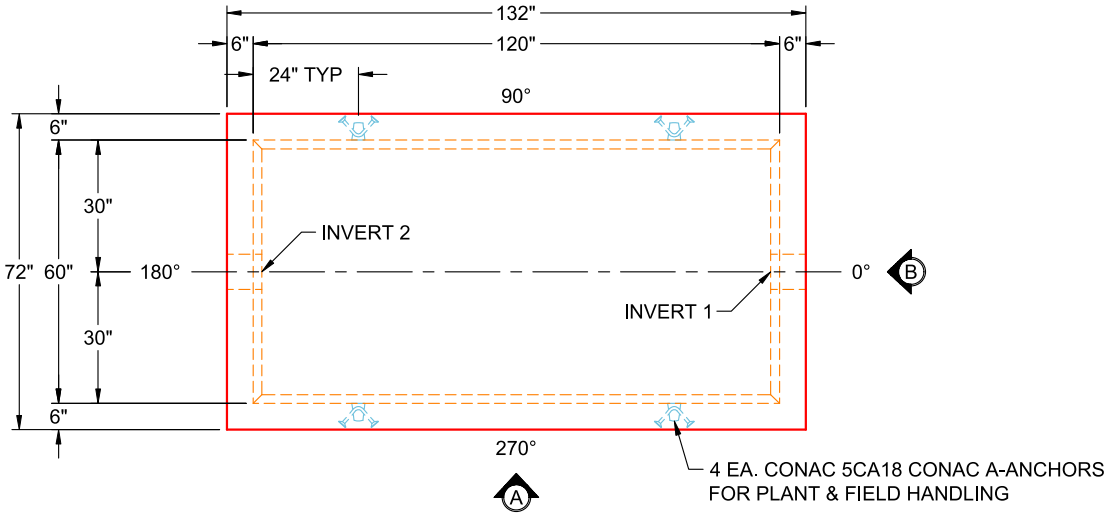

PLAN VIEW
(UPSIDE DOWN)

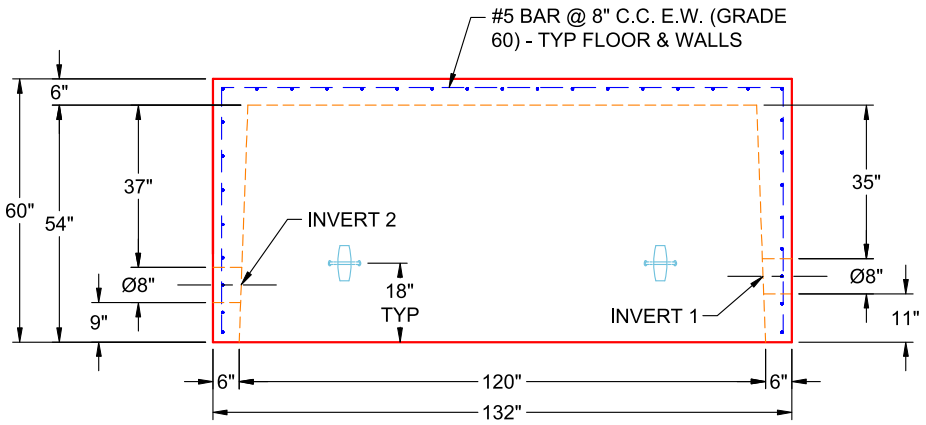

VIEW A
(UPSIDE DOWN)

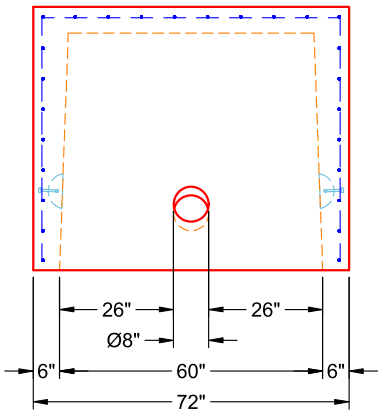

VIEW B
(UPSIDE DOWN)

Job Name: 26-2574 - Moore Grease Traps Job Location: Clarksville, TN 37043 Contractor: Core & Main LP (Nashville)	Plant: Beaver Dam, KY 6/2/2026 4:11:05 PM	Tech: K. Cardwell PC: T. Lewis	

Structure ID: QL2 GT1000 (5)

P1 BX60120-06W06F-BA54 BOX BASE 6inW, 6inF F/n

P3) 24" - CASTING HEIGHT - 7"	0 lb
P2) 60" x 120" - CB FLAT TOP 6"W w/(2) 24" HOLES (Grease Trap) F/F - 8"	5775 lb
P1) 60" x 120" - BOX BASE 6inW, 6inF F/n - 54"	16155 lb
1) SECONDARY POUR - Baffle Wall	975 lb
1) 60" x 120" - Conseal CS-102 1.00" (Double)	0 lb
1) 24" - Conseal CS-102 1.00" (Double)	0 lb
2) PSX - 8QRS-S NYLO	13 lb
Structure Total:	22918 lb

FIRST POUR (BASE): 16,155 LBS

SECOND POUR (BAFFLE WALL): 975 LBS

Rim: 5.75' Rim to Invert: 2.667' Slack: 0" Sump: 37" Step Position:

Structure Notes:

1. PER ASTM C-890-13 & ASTM C-913 SPECIFICATIONS
2. CONCRETE: 4,500 PSI AT 28 DAYS
3. REINFORCEMENT: #4 BAR @ 12" C.C. E.W. (GRADE 60) - 2" MIN. REBAR CLEARANCE (TYP)
4. DRILL & DOWEL #4 BAR @ 12" C.C. E.W. (GRADE 60) INTO BASE FLOOR FOR BAFFLE WALL TIE-IN - MIN. 4" PENETRATION INTO BASE FLOOR
5. PRIOR TO BAFFLE WALL POUR, ADD STRIP OF CS-231 BETWEEN BALLE WALL & TANK WALLS (BOTH SIDES)

Position	Elev	Angle	Ext. (cw)	Pipe	Pipe OD	Connector	Hole	Horz Size	Up (_)	Offset
Invert 1	3.083'	0°	36"	4" PVC SDR35	4.25"	PSX 8QRS-S NYLO	8"	8"	35"	0"
Invert 2	3.25'	180°	36"	4" PVC SDR35	4.25"	PSX 8QRS-S NYLO	8"	8"	37"	0"
Invert 3										

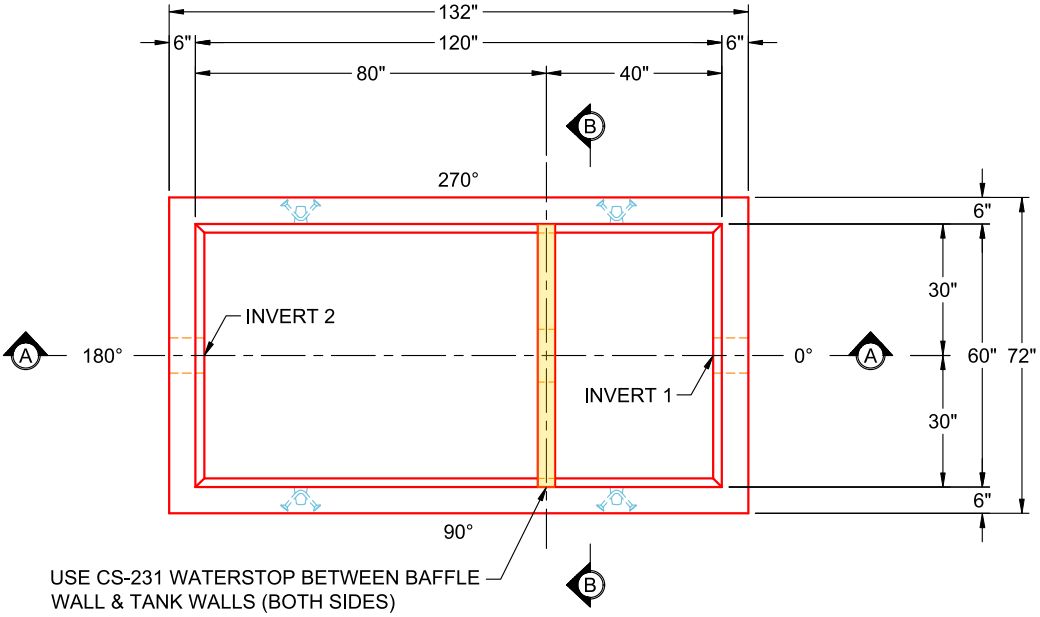

PLAN VIEW
(RIGTH SIDE UP)

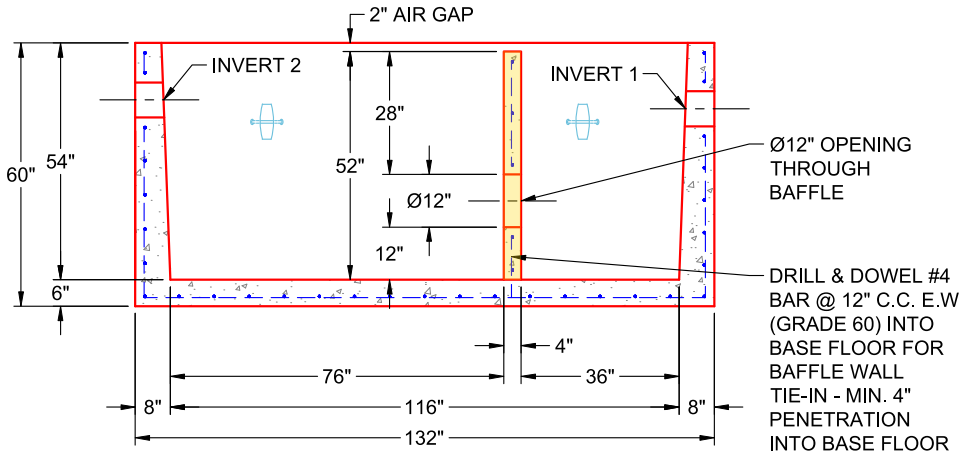

SECTION A-A
(RIGHT SIDE UP)

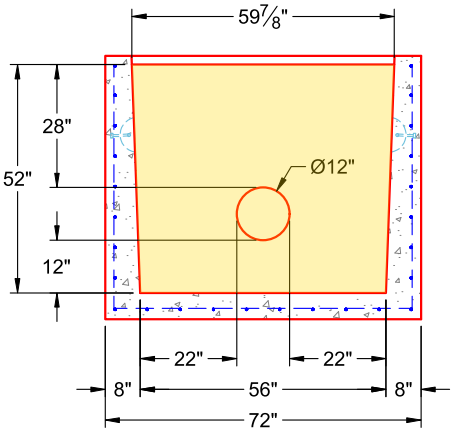

SECTION B-B
(RIGHT SIDE UP)