Job Name: 26-2217 Kroger COB Job Location: Bowling Green, KY Contractor: Stewart Richey	Plant: Beaver Dam 7/21/2026 8:13:05 AM	Tech: J. Coppage PC: T. Lewis	

Structure ID: QL3

P3 MH084LD17SP MH FLAT TOP w/60"x54" Hatch

P4) 60" x 54" - HATCH (CAST FLUSH) - 3"	100 lb
P3) 84" - MH FLAT TOP w/60"x54" Hatch - 17"	5152 lb
P2) 84" - MH RISER - 90"	17186 lb
P1) 84" - MH BASE w/FLANGE (12F/07EF) - 60"	21919 lb
1) JOINT WRAP - 12" WD x 084" MAC WRAP	0 lb
1) HATCH (Alum.) - HALLIDAY H2W 60"x54"	263 lb
1) This Structure Includes a Cast-in Item - 60" x 54" Hatch	0 lb
1) SECONDARY POUR - EXT FLANGE	0 lb
2) 84" - Conseal CS-231 1.00" (Double)	0 lb
2) PSX - 12M NYLO	16 lb
1) PSX - 12-08 NYLO	8 lb
1) PSX - 8QRS-S NYLO	6 lb
Structure Total:	44651 lb

Structure Notes: .
1. HALLIDAY H2W 60" X 54" HATCH BY ICAST.
2. HATCH TO BE CAST INTO THE TOP SLAB.
3. PER ASTM C478 SPECIFICATIONS.
4. CONCRETE = 4,500 PSI AT 28 DAYS.
5. NO STEPS
6. REINFORCING PER ASTM A615 (GRADE 60).
- TOP SLAB AS SHOWN BELOW
- RISER/WALLS (As .12)
- FLOOR (As .37) #5 BARS AT 10" C.C.E.W. DBL MAT.

GENERAL NOTES:
1. MANUFACTURED TO ASTM C-478 (LATEST REVISION).
2. CONCRETE 4,500 PSI AT 28 DAYS.
3. HALLIDAY H2W 60" X 54" HATCH BY ICAST.
4. HATCH TO BE CAST INTO THE TOP SLAB.
5. REINFORCING: TOP MAT #4 @ 18" O.C. E.W.
BOTTOM MAT #4 @ 9" O.C. E.W.
(GRADE 60)

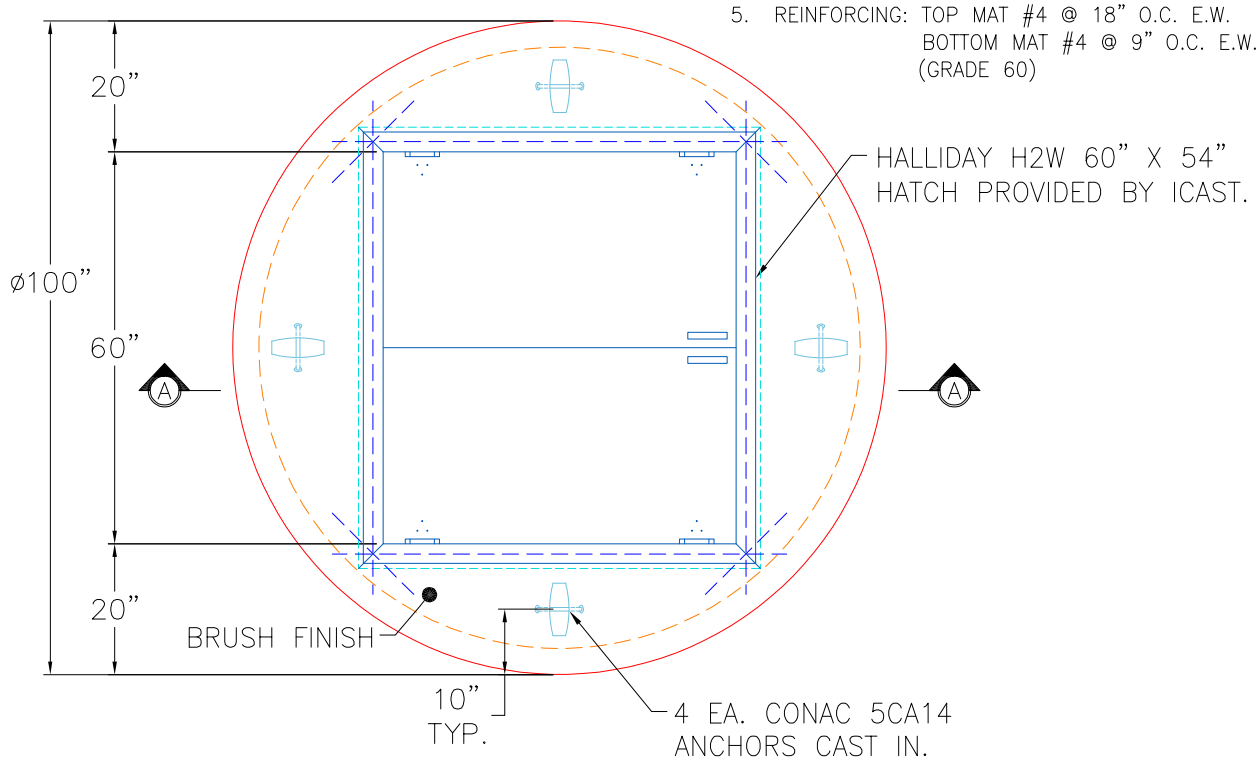

PLAN VIEW

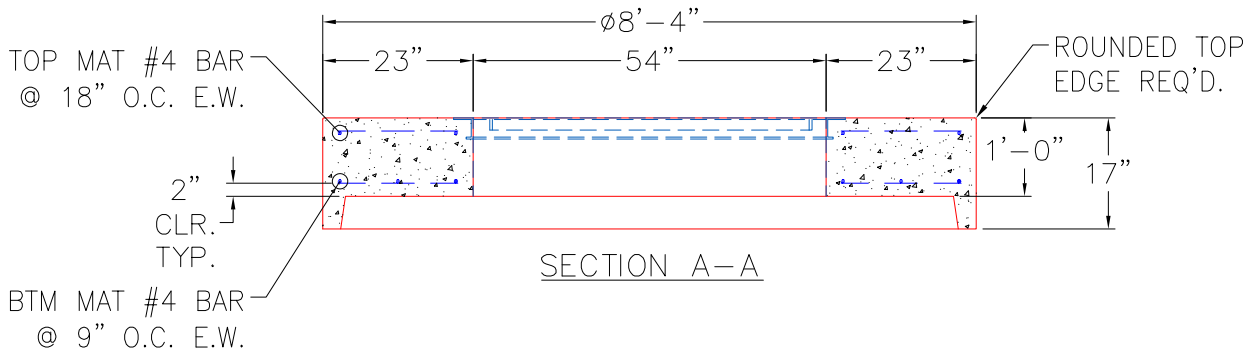

SECTION A-A

Coating (Int): Coating (Ext):	Seam Up: Flat Seam Dn: Groove	Wall Thickness: 8"	Height (Ext): 17"	Weight (Net): 5152 lb Volume (Net): 1.32cu.yd