Job Name: 26-2080 - The Cumberland Job Location: Bowling Green, KY Contractor: J & J Concrete & Excavating, LLC	Plant: 100 6/22/2026 6:23:27 PM	Tech: Jared - A PC: E. Bradley	

Structure ID: C5 ST-CI

P1 MH048BA42 MH BASE T/n

P3) 24" x 36" - CASTING HEIGHT - 6"	0 lb
P2) 48" - MH FLAT TOP w/24"x36" Hole F/G - 12"	1300 lb
P1) 48" - MH BASE T/n - 42"	3665 lb
1) CASTING - HOE 525 SET (F/G/H)	442 lb
1) 48" - Conseal CS-102 1.00"	0 lb
1) 24" x 36" - Conseal CS-102 1.00"	0 lb
1) Hole - 30	0 lb
1) Hole - 16	0 lb
1) Hole - 24	0 lb
3) MH Step ML-10-TDS-NCR - 10"	0 lb
Structure Total:	5407 lb

Structure Notes:
1. PER ASTM C-478 SPECIFICATIONS
2. CONCRETE: 4,000 PSI AT 28 DAYS
3. REINFORCEMENT: PER ASTM A615
4. STEPS AT 180 DEGREES
5. HOE 525 FRAME, FLAT GRATE, & CURB HOOD SUPPLIED BY ICAST

Rim: 532.75' Rim to Invert: 5.07' Slack: 2.74" Sump: 1.9" Step Position: 180°

Position	Elev	Angle	Ext. (cw)	Pipe	Pipe OD	Connector	Hole	Horz Size	Up (_)	Offset
Invert 1	527.68'	0°	0"	24" HDPE	27.8"	Hole 30	30"	32.406"	0"	0"
Invert 2	527.68'	90°	45.5"	12" HDPE	14.5"	Hole 16	16"	16.312"	0.625"	0"
Invert 3	527.68'	270°	136.625"	18" HDPE	21.2"	Hole 24	24"	25.133"	0.25"	0"
Invert 4										
Invert 5										
Invert 6										
Invert 7										
Invert 8										

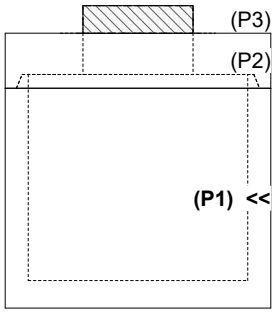

RIGHT-SIDE UP VIEW (int. dimensions)

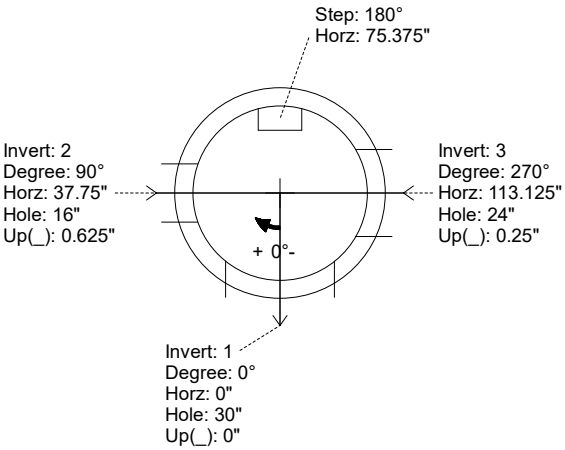

UPSIDE-DOWN VIEW (int. dimenions)

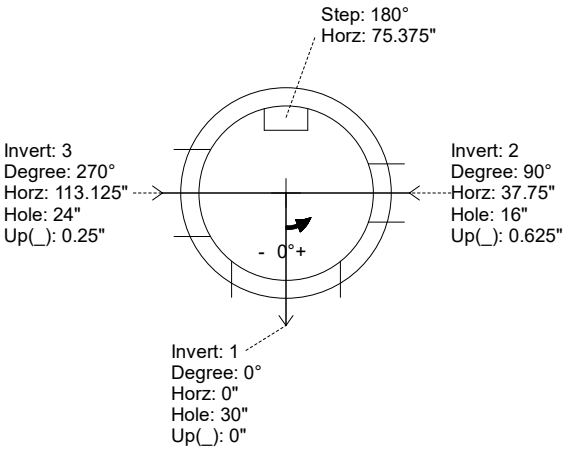

INSIDE WALL DIMENSIONS

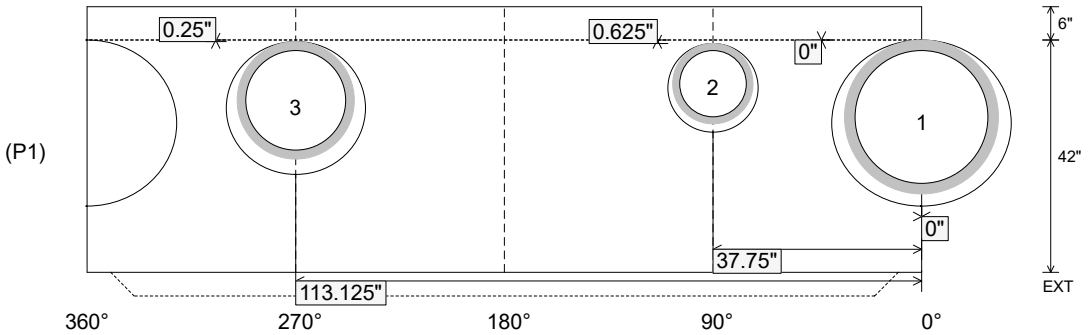

Coating (Int): Coating (Ext):	Seam Up: Tongue Seam Dn: n/a	Wall Thickness: 5" Floor Height: 6"	Height (Int): 42" Height (Ext): 48"	Weight (Net): 3665 lb Volume (Net): 0.94cu.yd