Job Name: 26-2485 855358 Fuqua Development Job Location: Nicholasville, KY Contractor: Contech Engineering Solutions	Plant: Beaver Dam 6/5/2026 8:56:50 AM	Tech: S. Felletter PC: C. Goff	

Structure ID: 20-CS-12

P4 MH144LD18SP **MH FLAT TOP SPEC. (2 - 24"ø HOLES) F/G**

P5) 24" - CASTING HEIGHT - 4"	0 lb
P4) 144" - MH FLAT TOP SPEC. (2 - 24"ø HOLES) F/G - 18"	23623 lb
P3) 144" - MH RISER Custom Ht T/G - 79"	38492 lb
P2) 144" - MH RISER Custom Ht T/G - 69"	37125 lb
P1) 144" - MH MONOBASE 14F, Custom Ht T/n - 24"	39578 lb
1) ASSEMBLY REQUIRED - BRACKETS ONLY	0 lb
1) CVSTENCILING	0 lb
3) 144" - Conseal CS-102 1.00"	0 lb
1) 24" - Conseal CS-102 1.00"	0 lb
2) Hole - 48	0 lb
Structure Total:	138818 lb

Structure Notes: .
1. PER ASTM C478 SPECIFICATIONS.
2. CONCRETE = 4,000 PSI AT 28 DAYS.
3. 4" CASTING BY OTHERS
4. LIFTING ANCHORS TO BE INSTALLED ON THE OUTSIDE OF THE STRUCTURE
5. ICAST TO INSTALL BRACKETS ONLY
6. CONTECH'S LOGO AS WELL AS THE INLET AND OUTLET MUST BE STENCILED ONTO THE STRUCTURE

.

REINFORCING PER ASTM A615 (GRADE 60).
- TOP SLAB (As .62) #5 BARS AT 6" C.C.E.W.
- RISER/WALLS (As .36)
- FLOOR (As .47) #5 BARS AT 8" C.C.E.W.

GENERAL NOTES:
1. MANUFACTURED TO ASTM C-478 (LATEST REVISION).
2. CONCRETE 5,000 PSI AT 28 DAYS.
3. REINFORCING: #4 & #6 BAR AS SHOWN (GRADE 60).
4. WEIGHT: 23,626 LBS.

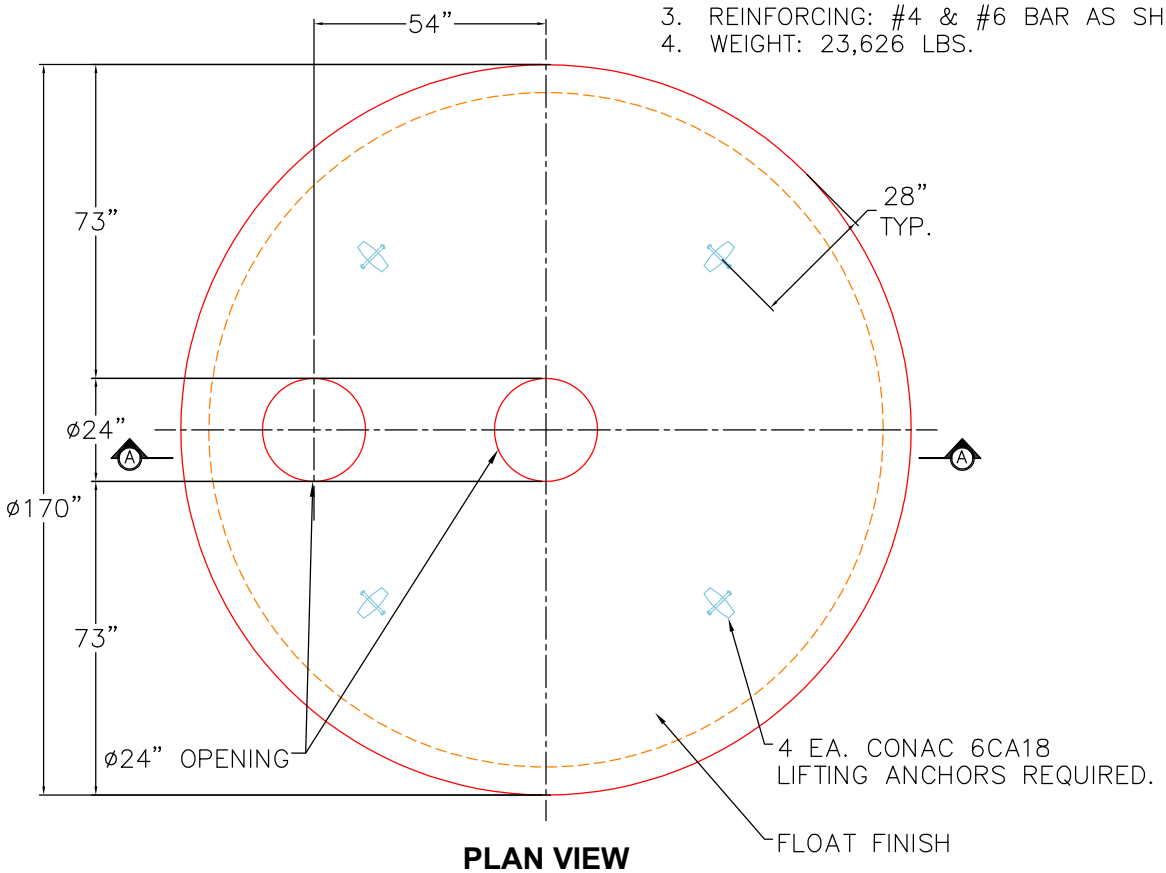

PLAN VIEW

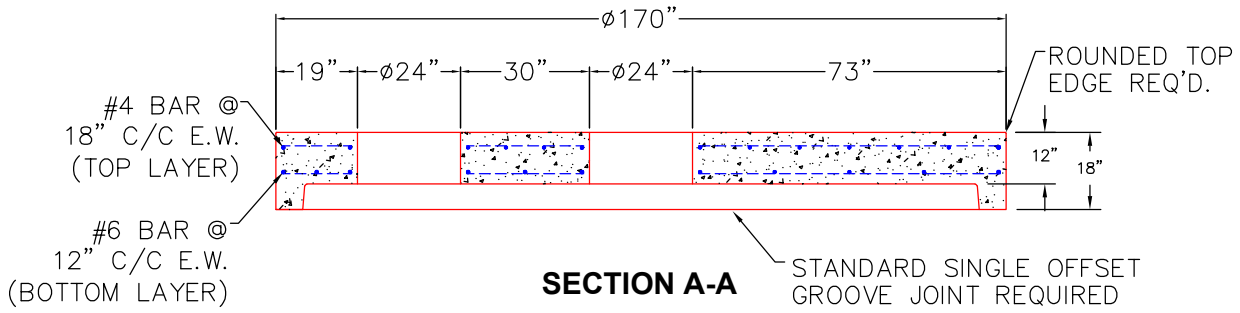

SECTION A-A

Coating (Int): Coating (Ext):	Seam Up: Flat Seam Dn: Groove	Wall Thickness: 13"	Height (Ext): 18"	Weight (Net): 23623 lb Volume (Net): 6.03cu.yd

Job Name: 26-2369 - Noel Avenue Doghouse MH Job Location: Madisonville, KY Contractor: Luttrell & Sons, LLC	Plant: 100 6/22/2026 11:25:49 AM	Tech: Jared - F PC: A. Chambers	

Structure ID: QL1 SS-MHDH

P2 MH048LD12X **XYPEX MH FLAT TOP w/24" ECC Hole F/G**

P3) 24" - CASTING HEIGHT - 7"	0 lb
P2) 48" - XYPEX MH FLAT TOP w/24" ECC Hole F/G - 12"	2205 lb
P1) 48" - MH DH RISER Custom Ht, w/XYPEX NO STEPS T/F - 57"	3738 lb
1) JOINT WRAP - 0.065"x6"x50' CONSEAL CS212	0 lb
1) JOINT WRAP PRIMER - CONSEAL CS-75 (1 gal.)	0 lb
1) ADMIXTURE XYPEX C-500 NF RED	0 lb
1) 48" - Conseal CS-102 1.00" (Double)	0 lb
1) 24" - Conseal CS-102 1.00" (Double)	0 lb
2) DOGHOUSE - 16"x20"	0 lb
Structure Total:	5943 lb

Structure Notes: .
1. PER ASTM C478 SPECIFICATIONS.
2. CONCRETE = 4,000 PSI AT 28 DAYS.
3. NO STEPS
4. ADMIXTURE = XYPEX C-500 NF RED
5. (CASTING PROVIDED BY OTHERS MC-315)

.
REINFORCING PER ASTM A615 (GRADE 60).
- TOP SLAB = H20 LOADING
- RISER (As .12)

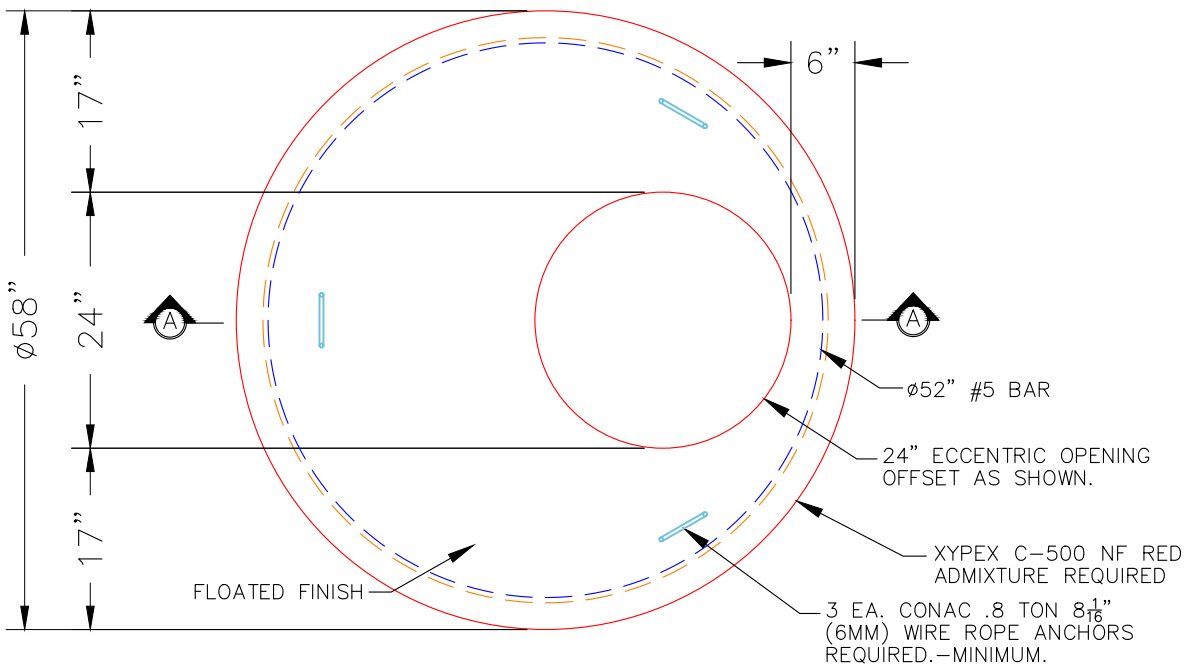

PLAN VIEW

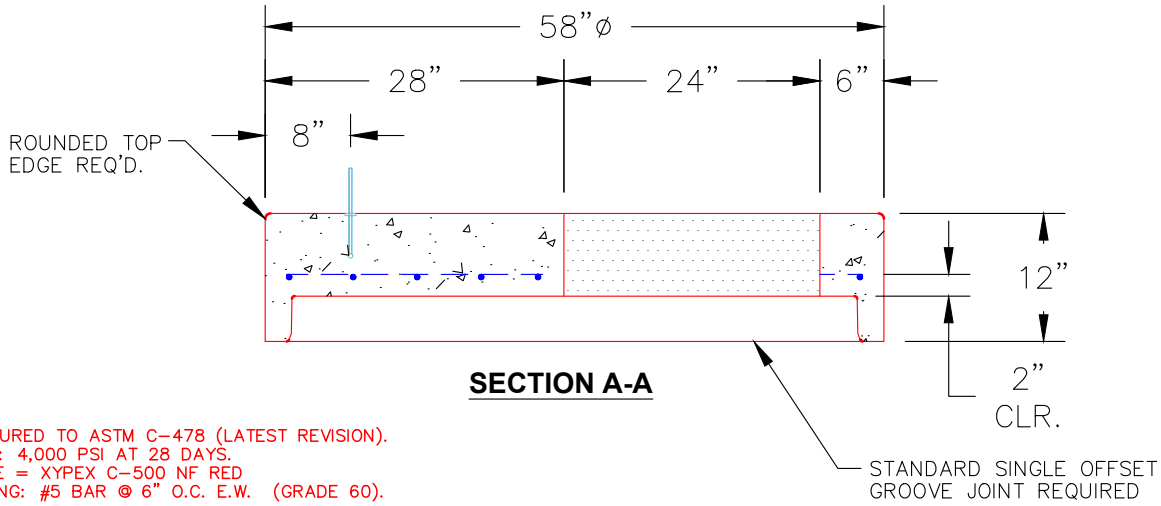

SECTION A-A

NOTES:
1. MANUFACTURED TO ASTM C-478 (LATEST REVISION).
2. CONCRETE: 4,000 PSI AT 28 DAYS.
3. ADMIXTURE = XYPEX C-500 NF RED
4. REINFORCING: #5 BAR @ 6" O.C. E.W. (GRADE 60).

Coating (Int): Coating (Ext):	Seam Up: Flat Seam Dn: Groove	Wall Thickness: 5"	Height (Ext): 12"	Weight (Net): 2205 lb Volume (Net): 0.56cu.yd

Job Name: 26-1651B Buffalo Trace Job Location: Campbellsville, KY Contractor: Buzick Construction	Plant: Beaver Dam 6/30/2026 8:22:49 AM	Tech: S. Felletter PC: E. Bradley	

Structure ID: CB 816.09

P1 MH048BAVF MH BASE Custom Ht T/n

P3) 34" x 34" - CASTING HEIGHT - 3"	0 lb
P2) 48" - MH FLAT TOP w/34"x34" Hole F/G - 12"	1194 lb
P1) 48" - MH BASE Custom Ht T/n - 27"	3060 lb
1) CASTING - HOE 595 F/G	376 lb
1) 48" - Conseal CS-102 1.00"	0 lb
1) Hole - 18	0 lb
1) Hole - 12	0 lb
2) MH Step ML-10-TDS-NCR - 10"	0 lb
Structure Total:	4630 lb

Structure Notes: .
1. PER ASTM C478 SPECIFICATIONS.
2. CONCRETE = 4,000 PSI AT 28 DAYS.
3. CASTING BY ICAST (HOE 595 F/C).

.
REINFORCING PER ASTM A615 (GRADE 60).
- TOP SLAB (As .62) #5 BARS AT 6" C.C.E.W..
- RISER/WALLS (As .12)
- FLOOR (As .31) #5 BARS AT 12" C.C.E.W.

Rim: 819.59' Rim to Invert: 3.5' Slack: 0" Sump: 0" Step Position: 180°

Position	Elev	Angle	Ext. (cw)	Pipe	Pipe OD	Connector	Hole	Horz Size	Up (_)	Offset
Invert 1	816.09'	0°	0"	12" HDPE	14.5"	Hole 18	18"	18.451"	-1.25"	0"
Invert 2	816.09'	280°	141.721"	8" PVC SDR35	8.5"	Hole 12	12"	12.129"	-0.25"	0"
Invert 3										
Invert 4										
Invert 5										
Invert 6										
Invert 7										
Invert 8										

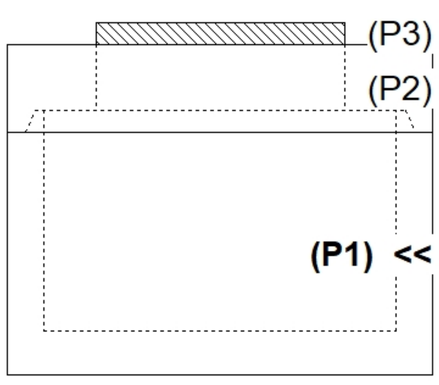

RIGHT-SIDE UP VIEW (int. dimensions)

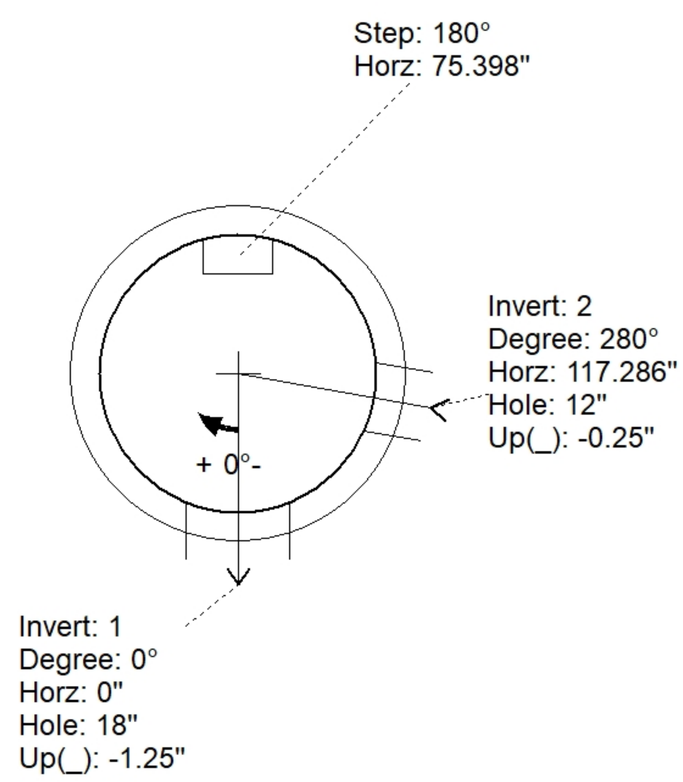

UPSIDE-DOWN VIEW (int. dimenions)

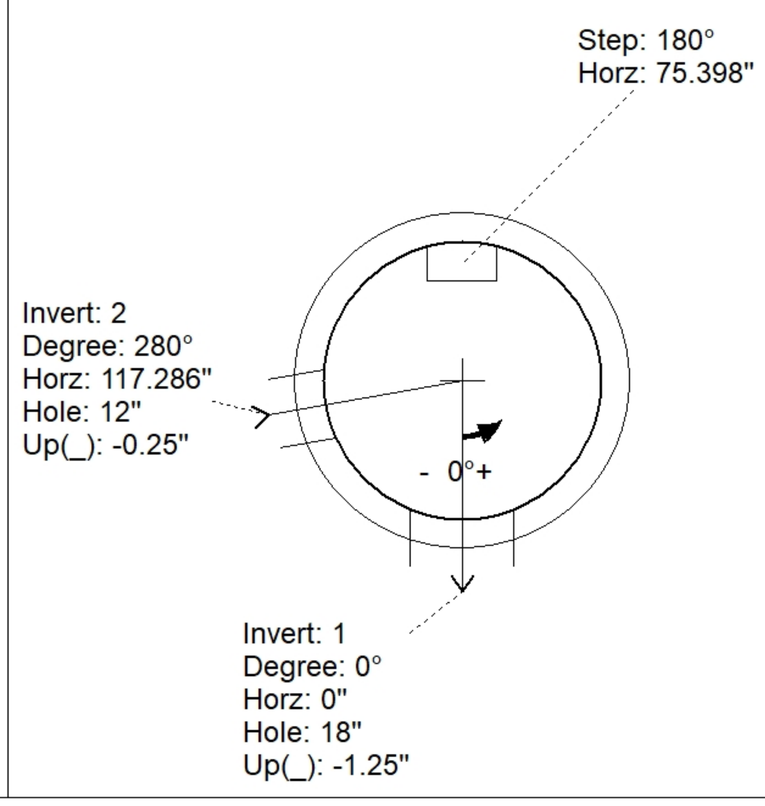

INSIDE WALL DIMENSIONS

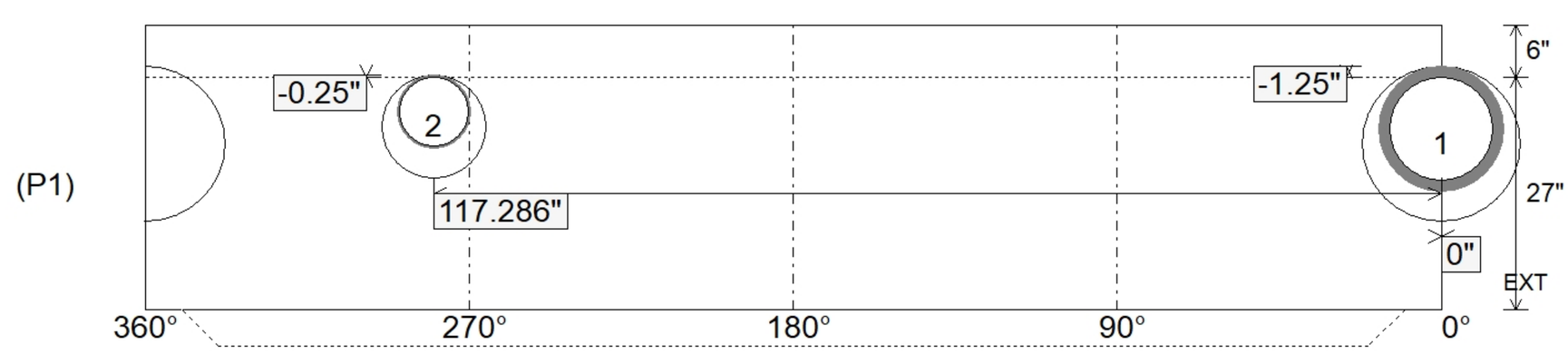

Coating (Int): Coating (Ext):	Seam Up: Tongue Seam Dn: n/a	Wall Thickness: 5" Floor Height: 6"	Height (Int): 27" Height (Ext): 33"	Weight (Net): 3060 lb Volume (Net): 0.78cu.yd

Job Name: 26-2801 900640 QuikTrip No. 0680
Job Location: CPU
Contractor: Contech Engineering Solutions

Plant: Beaver Dam
6/25/2026 11:01:07 AM

Tech: S. Felletter
PC: C. Goff

Structure ID: 10-CS-4

P3 MH048RS30 MH RISER T/G

P5) 30" - CASTING HEIGHT - 4"	0 lb
P4) 48" - MH FLAT LID w/30in ECC Hole F/G - 12"	1413 lb
P3) 48" - MH RISER T/G - 30"	2096 lb
P2) 48" - MH RISER SPECIAL T/G - 72"	4934 lb
P1) 48" - MH BASE T/n - 18"	2588 lb
1) ASSEMBLY REQUIRED	0 lb
1) CVSTENCILING	0 lb
3) 48" - Conseal CS-102 1.00"	0 lb
2) PSX - 12-08 NYLO	16 lb
Structure Total:	11047 lb

Structure Notes: .
4" CASTING BY OTHERS
.
LIFTING ANCHORS TO BE INSTALLED ON THE OUTSIDE OF THE STRUCTURE
.
ICAST TO INSTALL THE INTERNALS
.
CONTECH'S LOGO AS WELL AS THE INLET AND OUTLET MUST BE STENCILED ONTO THE STRUCTURE

Rim: 609.6' Rim to Invert: 7.6' Slack: 6.2" Sump: 51" Step Position:

Position	Elev	Angle	Ext. (cw)	Pipe	Pipe OD	Connector	Hole	Horz Size	Up (_)	Offset
Invert 1										
Invert 2										
Invert 3										
Invert 4										
Invert 5										
Invert 6										
Invert 7										
Invert 8										

RIGHT-SIDE UP VIEW (int. dimensions)

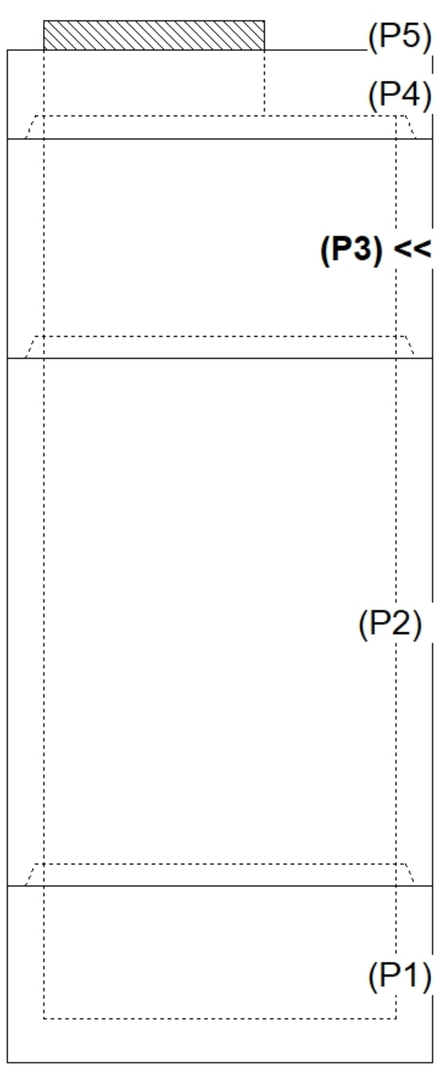

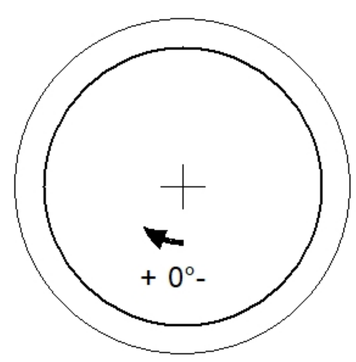

INSIDE WALL DIMENSIONS

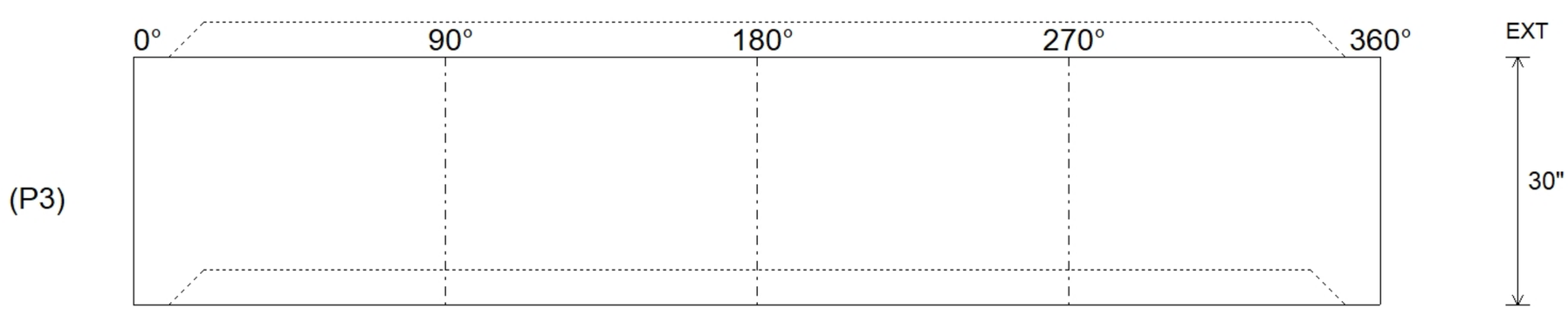

Coating (Int): Coating (Ext):	Seam Up: Tongue Seam Dn: Groove	Wall Thickness: 5" Floor Height: 0"	Height (Int): 30" Height (Ext): 30"	Weight (Net): 2096 lb Volume (Net): 0.54cu.yd

Job Name: 25-4284 - Bean Cemetery Rd Water Line Extension Job Location: Madisonville, KY Contractor: Luttrell & Sons, LLC	Plant: 100 6/29/2026 9:51:08 AM	Tech: Jared - F PC: A. Chambers	

Structure ID: ARV-4

P2 MH048DHVF **MH DH RISER Custom Ht**

P4) 24" - CASTING HEIGHT - 7"	0 lb
P3) 48" - MH FLAT TOP w/ 24" ECC Hole - 12"	1561 lb
P2) 48" - MH DH RISER Custom Ht - 57"	3724 lb
P1) 48" - P.I.P. BY OTHERS - BTM SLAB - 0"	0 lb
1) CASTING - HOE MC-375 F/C Vented	258 lb
2) 48" - Conseal CS-102 1.00" (Double)	0 lb
1) 24" - Conseal CS-102 1.00" (Double)	0 lb
2) DOGHOUSE - 14"x20"	0 lb
Structure Total:	5543 lb

Structure Notes:
1. PER ASTM C478 SPECIFICATIONS.
2. CONCRETE = 4,000 PSI AT 28 DAYS.
3. NO STEPS AND NO INVERT CHANNEL.
4. CASTING BY ICAST (HOE MC-375 F/VENTED COVER).
5. FOOTERS BY OTHERS

REINFORCING PER ASTM A615 (GRADE 60).
- TOP SLAB (As .62) #5 BARS AT 6" C.C.E.W.
- RISER/WALLS (As .12)

Rim: 5.83' Rim to Invert: 5.83' Slack: -0.04" Sump: 6" Step Position:

Position	Elev	Angle	Ext. (cw)	Pipe	Pipe OD	Connector	Hole	Horz Size	Up (_)	Offset
Invert 1	0'	0°	-12.372"	10" PVC SDR35	10.5"	DOGHOUSE 14"x20"	14" x 20"	16.888"	1"	-12"
Invert 2	0'	180°	103.478"	10" PVC SDR35	10.5"	DOGHOUSE 14"x20"	14" x 20"	16.888"	1"	12"
Invert 3										
Invert 4										
Invert 5										
Invert 6										
Invert 7										
Invert 8										

RIGHT-SIDE UP VIEW (int. dimensions)

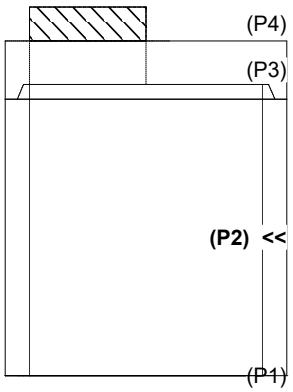

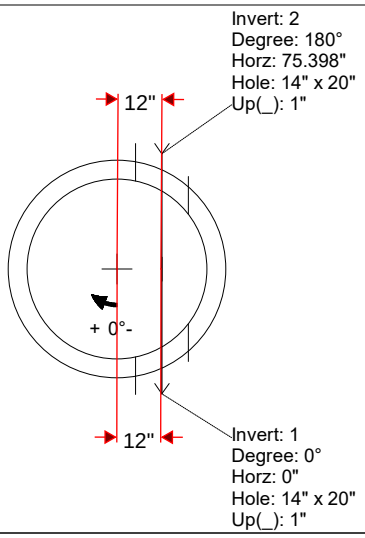

INSIDE WALL DIMENSIONS

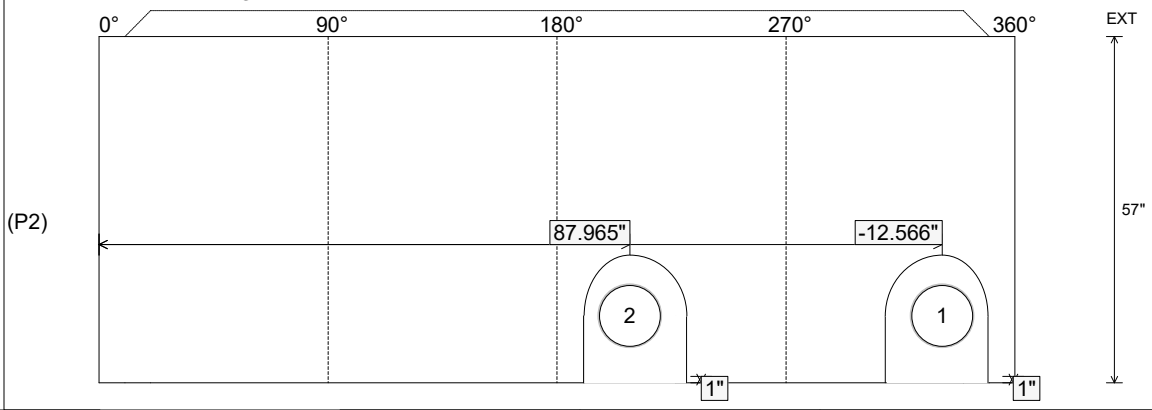

Coating (Int): Coating (Ext):	Seam Up: Tongue Seam Dn: Flat	Wall Thickness: 5" Floor Height: 0"	Height (Int): 57" Height (Ext): 57"	Weight (Net): 3724 lb Volume (Net): 0.95cu.yd

Job Name: 26-2801 900640 QuikTrip No. 0680 Job Location: CPU Contractor: Contech Engineering Solutions	Plant: Beaver Dam 6/25/2026 11:00:26 AM	Tech: S. Felletter PC: C. Goff	

Structure ID: 10-CS-4

P1 MH048BA18 MH BASE T/n

P5) 30" - CASTING HEIGHT - 4"	0 lb
P4) 48" - MH FLAT LID w/30in ECC Hole F/G - 12"	1413 lb
P3) 48" - MH RISER T/G - 30"	2096 lb
P2) 48" - MH RISER SPECIAL T/G - 72"	4934 lb
P1) 48" - MH BASE T/n - 18"	2588 lb
1) ASSEMBLY REQUIRED	0 lb
1) CVSTENCILING	0 lb
3) 48" - Conseal CS-102 1.00"	0 lb
2) PSX - 12-08 NYLO	16 lb
Structure Total:	11047 lb

Structure Notes: .
4" CASTING BY OTHERS
.
LIFTING ANCHORS TO BE INSTALLED ON THE OUTSIDE OF THE STRUCTURE
.
ICAST TO INSTALL THE INTERNALS
.
CONTECH'S LOGO AS WELL AS THE INLET AND OUTLET MUST BE STENCILED ONTO THE STRUCTURE

Rim: 609.6' Rim to Invert: 7.6' Slack: 6.2" Sump: 51" Step Position:

Position	Elev	Angle	Ext. (cw)	Pipe	Pipe OD	Connector	Hole	Horz Size	Up (_)	Offset
Invert 1										
Invert 2										
Invert 3										
Invert 4										
Invert 5										
Invert 6										
Invert 7										
Invert 8										

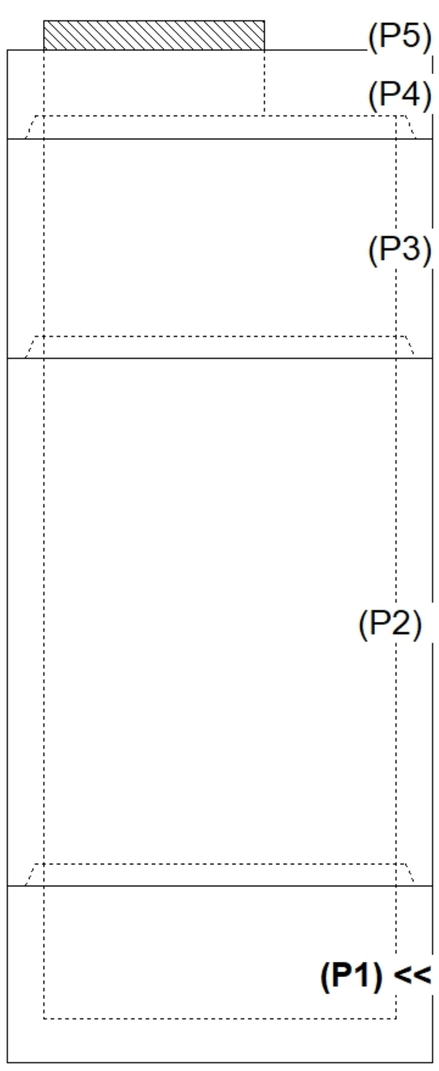

RIGHT-SIDE UP VIEW (int. dimensions)

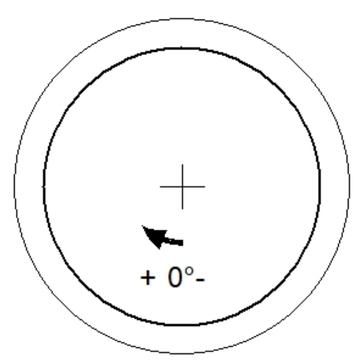

UPSIDE-DOWN VIEW (int. dimenions)

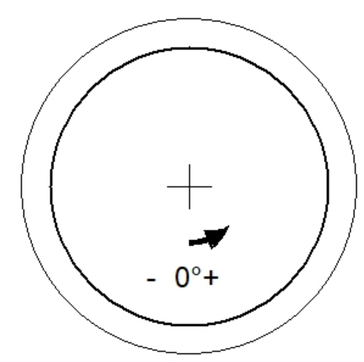

INSIDE WALL DIMENSIONS

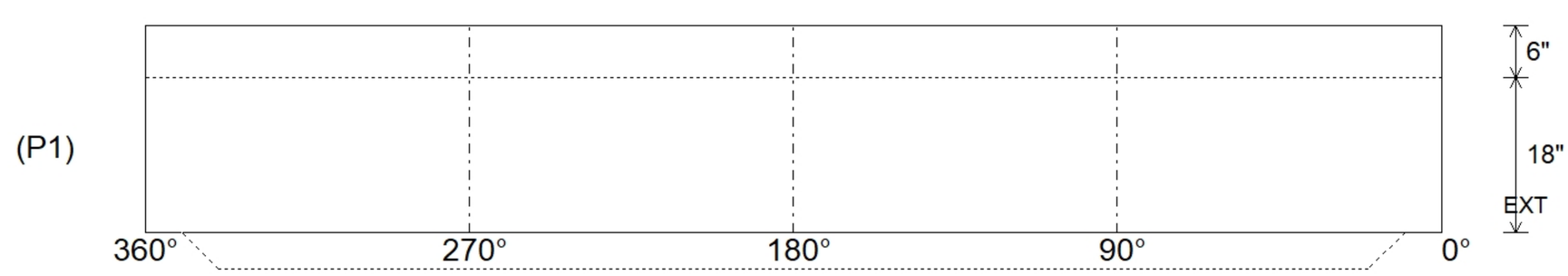

Coating (Int): Coating (Ext):	Seam Up: Tongue Seam Dn: n/a	Wall Thickness: 5" Floor Height: 6"	Height (Int): 18" Height (Ext): 24"	Weight (Net): 2588 lb Volume (Net): 0.66cu.yd

Job Name: 26-2104 - Jeffersonville High School Parking Lot Job Location: Jeffersonville, IN Contractor: Mac Construction & Excavating, Inc.	Plant: 100 6/27/2026 7:12:40 PM	Tech: Jared - A PC: T. Lewis	

Structure ID: 14 ST-CI

P1 MH048BAVF **MH BASE Custom Ht F/n**

P3) 24" x 36" - CASTING HEIGHT - 6"	0 lb
P2) 48" - MH FLAT TOP w/24"x36" Hole F/F - 7"	1044 lb
P1) 48" - MH BASE Custom Ht F/n - 25"	2583 lb
1) 48" - Conseal CS-102 1.00"	0 lb
1) 24" x 36" - Conseal CS-102 1.00"	0 lb
1) Hole - 22	0 lb
3) Hole - 18	0 lb
Structure Total:	3627 lb

Structure Notes:
1. PER ASTM C-478 SPECIFICATIONS
2. CONCRETE: 4,000 PSI AT 28 DAYS
3. REINFORCEMENT: PER ASTM A615
4. STORM INVERT BY OTHERS
5. NO STEPS
6. HOE 525 FRAME, GRATE, & CURB HOOD SUPPLIED BY OTHERS
7. INVERTS 1 & 2 OFFSET 3" FROM CENTER

Rim: 482.03' Rim to Invert: 3.03' Slack: 0.61" Sump: 2.25" Step Position:

Position	Elev	Angle	Ext. (cw)	Pipe	Pipe OD	Connector	Hole	Horz Size	Up (_)	Offset
Invert 1	479'	0°	-3"	15" RCP B WALL	19.5"	Hole 22	22"	23.104"	0"	-3"
Invert 2	479'	51°	28.875"	12" RCP B WALL	16"	Hole 18	18"	18.631"	0.25"	3"
Invert 3	479'	145°	73.375"	12" RCP B WALL	16"	Hole 18	18"	18.451"	0.25"	0"
Invert 4	479'	235°	119"	12" RCP B WALL	16"	Hole 18	18"	18.451"	0.25"	0"
Invert 5										
Invert 6										
Invert 7										
Invert 8										

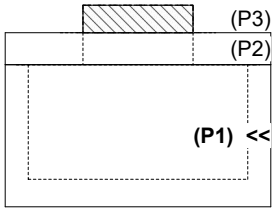

RIGHT-SIDE UP VIEW (int. dimensions)

UPSIDE-DOWN VIEW (int. dimenions)

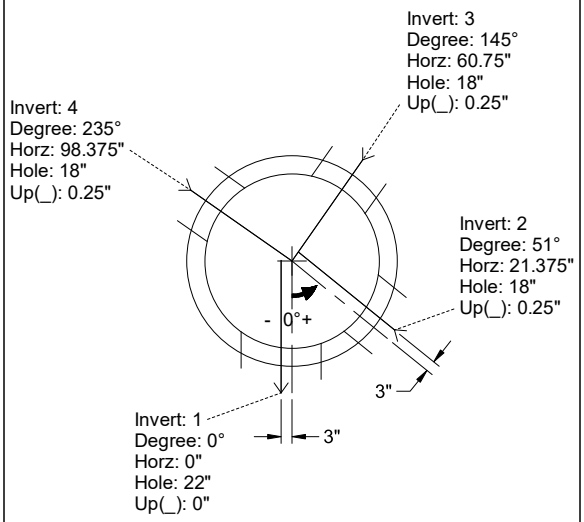

INSIDE WALL DIMENSIONS

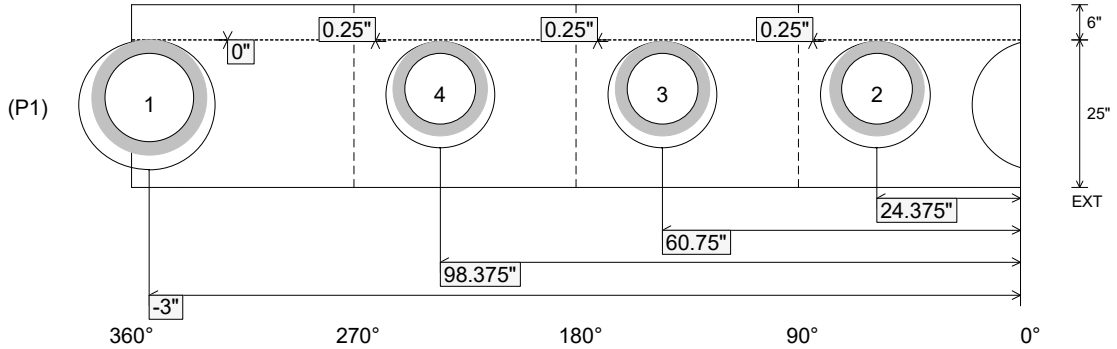

Coating (Int): Coating (Ext):	Seam Up: Flat Seam Dn: n/a	Wall Thickness: 5" Floor Height: 6"	Height (Int): 25" Height (Ext): 31"	Weight (Net): 2583 lb Volume (Net): 0.66cu.yd

Job Name: 26-2104 - Jeffersonville High School Parking Lot Job Location: Jeffersonville, IN Contractor: Mac Construction & Excavating, Inc.	Plant: 100 6/27/2026 7:12:39 PM	Tech: Jared - A PC: T. Lewis	

Structure ID: 12 ST-CI

P1 MH048BAVF **MH BASE Custom Ht F/n**

P3) 24" x 36" - CASTING HEIGHT - 6"	0 lb
P2) 48" - MH FLAT TOP w/24"x36" Hole F/F - 7"	1044 lb
P1) 48" - MH BASE Custom Ht F/n - 52"	4270 lb
1) 48" - Conseal CS-102 1.00"	0 lb
1) 24" x 36" - Conseal CS-102 1.00"	0 lb
1) Hole - 32	0 lb
2) Hole - 22	0 lb
Structure Total:	5315 lb

Structure Notes:
1. PER ASTM C-478 SPECIFICATIONS
2. CONCRETE: 4,000 PSI AT 28 DAYS
3. REINFORCEMENT: PER ASTM A615
4. STORM INVERT BY OTHERS
5. NO STEPS
6. HOE 525 FRAME, GRATE, & CURB HOOD SUPPLIED BY OTHERS

Rim: 482.61' Rim to Invert: 4.04' Slack: 1.48" Sump: 18" Step Position:

Position	Elev	Angle	Ext. (cw)	Pipe	Pipe OD	Connector	Hole	Horz Size	Up (_)	Offset
Invert 1	478.57'	0°	0"	24" RCP B WALL	30"	Hole 32	32"	35.027"	15"	0"
Invert 2	478.57'	177°	89.625"	15" RCP B WALL	19.5"	Hole 22	22"	22.854"	15.75"	0"
Invert 3	479.48'	267°	135.125"	15" RCP B WALL	19.5"	Hole 22	22"	22.854"	26.625"	0"
Invert 4										
Invert 5										
Invert 6										
Invert 7										
Invert 8										

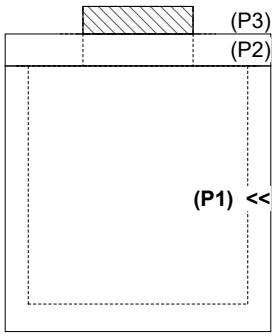

RIGHT-SIDE UP VIEW (int. dimensions)

UPSIDE-DOWN VIEW (int. dimenions)

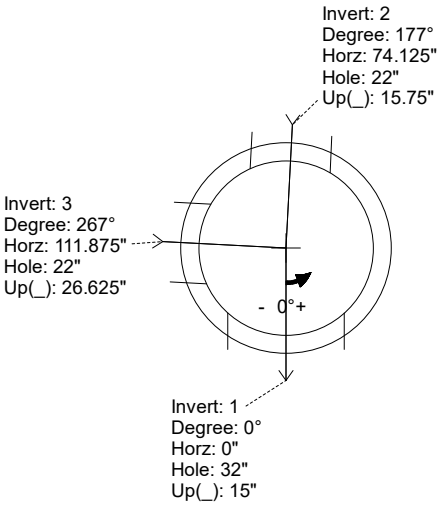

INSIDE WALL DIMENSIONS

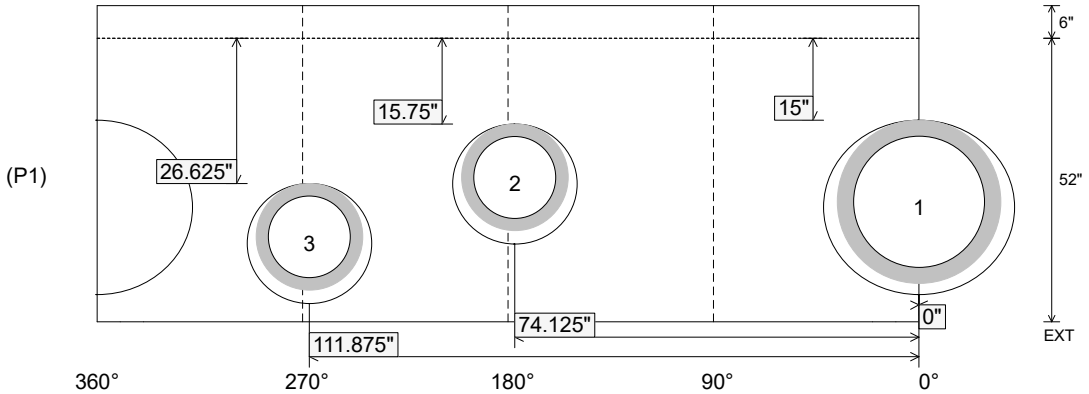

Coating (Int): Coating (Ext):	Seam Up: Flat Seam Dn: n/a	Wall Thickness: 5" Floor Height: 6"	Height (Int): 52" Height (Ext): 58"	Weight (Net): 4270 lb Volume (Net): 1.09cu.yd

Job Name: 25-3062 Portland Bypass Job Location: Portland, TN Contractor: Scotty's Contracting & Stone, LLC	Plant: Beaver Dam 6/1/2026 8:24:12 AM	Tech: J. Coppage PC: C. Goff	

Structure ID: CB-9

P2 MH048LD10SP **MH FLAT TOP - TDOT NO 12 (28"x34" Hole)**

P3) 28" x 34" - CASTING HEIGHT - 7"	0 lb
P2) 48" - MH FLAT TOP - TDOT NO 12 (28"x34" Hole) - 10"	1497 lb
P1) 48" - MH BASE Custom Ht - 40"	3508 lb
1) CASTING - JBS-3123 MODIFIED SET	250 lb
1) 48" - Conseal CS-102 1.00"	0 lb
1) 28" x 34" - Conseal CS-102 1.00"	0 lb
1) Hole - 32	0 lb
1) Hole - 26	0 lb
1) Hole - 6	0 lb
Structure Total:	5255 lb

Structure Notes:
1. PER TDOT D-CB-12RA / ASTM C478 SPEC'S.
2. CONCRETE = 4,000 PSI AT 28 DAYS.
3. JBS 3123 MOD SINGLE SET BY ICAST
5. REINFORCING PER ASTM A615 (GRADE 60).
** PER TDOT STD DRAWING D-CB-12RA **
- TOP SLAB - DBL MAT #5 BARS.
- RISER (As .24)
- FLOOR (As .62) #5 BARS AT 6" C.C.E.W.

NOTES:
1. MANUFACTURED TO ASTM C-478 (LATEST REVISION).
2. CONCRETE: 4,000 PSI AT 28 DAYS.
3. REINFORCING: PER TDOT DRAWING D-CB-12RA OR D-RL-1 FOR WWM OPTION.

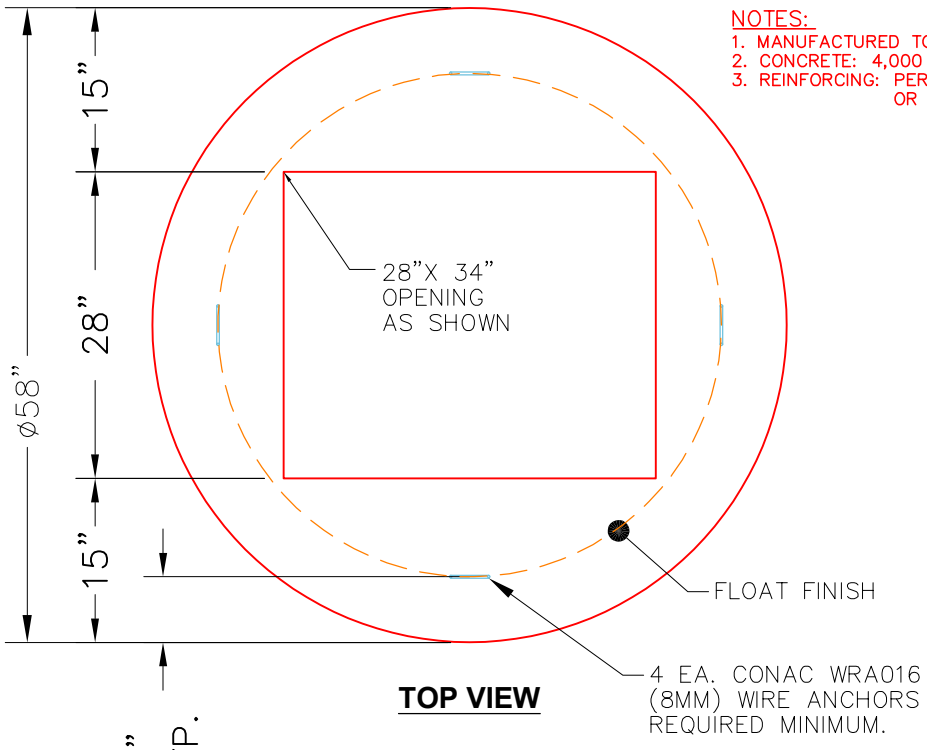

TOP VIEW

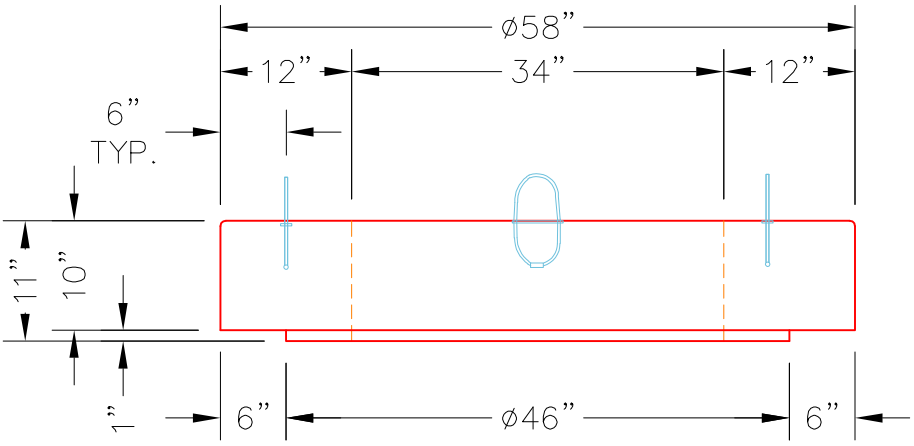

FRONT VIEW

Coating (Int): Coating (Ext):	Seam Up: Flat Seam Dn: Flat	Wall Thickness: 5"	Height (Ext): 10"	Weight (Net): 1497 lb Volume (Net): 0.38cu.yd

Job Name: 25-2284C Parks at Cane Ridge Ph.2B Job Location: Antioch, TN Contractor: Josh King Excavating	Plant: Beaver Dam 6/22/2026 8:23:36 AM	Tech: S. Felletter PC: A. Chambers	

Structure ID: D3

P1 MH048RSVF MH RISER Custom Ht F/F

P1) 48" - MH RISER Custom Ht F/F - 30" 2096 lb

Structure Total: 2096 lb

Structure Notes: .
1. PER ASTM C478 SPECIFICATIONS.
2. CONCRETE = 4,000 PSI AT 28 DAYS.
.
REINFORCING PER ASTM A615 (GRADE 60).
- RISER/WALLS (As .12)

Rim: 2.5' Rim to Invert: 0' Slack: 0" Sump: 0" Step Position: 0°

Position	Elev	Angle	Ext. (cw)	Pipe	Pipe OD	Connector	Hole	Horz Size	Up (_)	Offset
Invert 1										
Invert 2										
Invert 3										
Invert 4										
Invert 5										
Invert 6										
Invert 7										
Invert 8										

RIGHT-SIDE UP VIEW (int. dimensions)

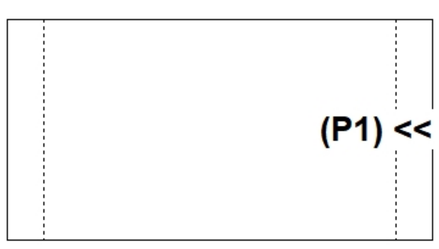

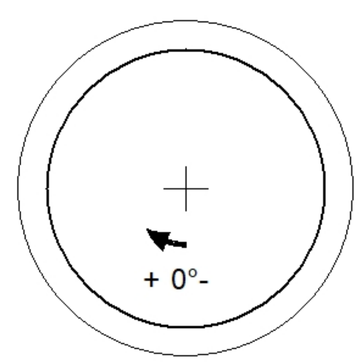

INSIDE WALL DIMENSIONS

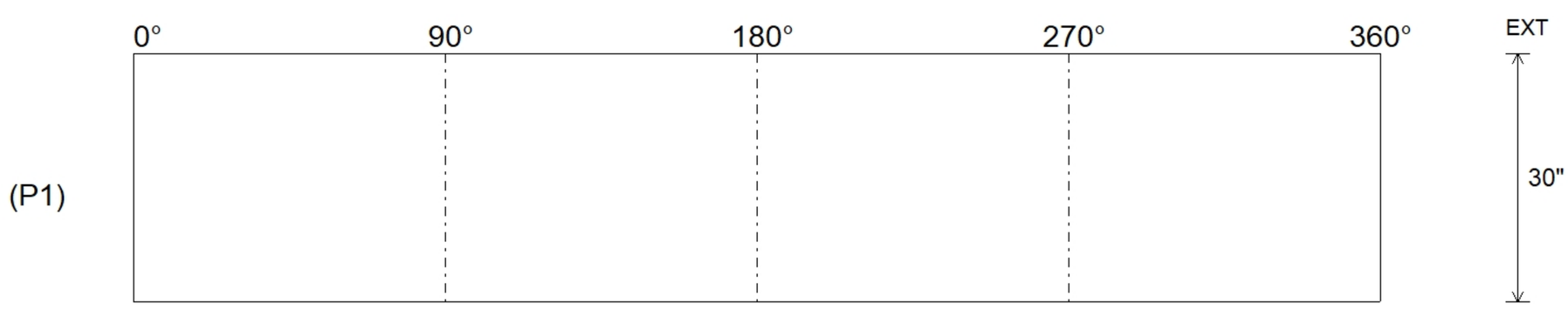

Coating (Int): Coating (Ext):	Seam Up: Flat Seam Dn: Flat	Wall Thickness: 5" Floor Height: 0"	Height (Int): 30" Height (Ext): 30"	Weight (Net): 2096 lb Volume (Net): 0.54cu.yd

Job Name: 25-2284C Parks at Cane Ridge Ph.2B Job Location: Antioch, TN Contractor: Josh King Excavating	Plant: Beaver Dam 6/22/2026 8:23:35 AM	Tech: S. Felletter PC: A. Chambers	

Structure ID: D4

P1 MH048RSVF MH RISER Custom Ht F/F

P1) 48" - MH RISER Custom Ht F/F - 28" 1956 lb

Structure Total: 1956 lb

Structure Notes: .
1. PER ASTM C478 SPECIFICATIONS.
2. CONCRETE = 4,000 PSI AT 28 DAYS.
.
REINFORCING PER ASTM A615 (GRADE 60).
- RISER/WALLS (As .12)

Rim: 2.333' Rim to Invert: 0' Slack: 0" Sump: 0" Step Position: 0°

Position	Elev	Angle	Ext. (cw)	Pipe	Pipe OD	Connector	Hole	Horz Size	Up (_)	Offset
Invert 1										
Invert 2										
Invert 3										
Invert 4										
Invert 5										
Invert 6										
Invert 7										
Invert 8										

RIGHT-SIDE UP VIEW (int. dimensions)

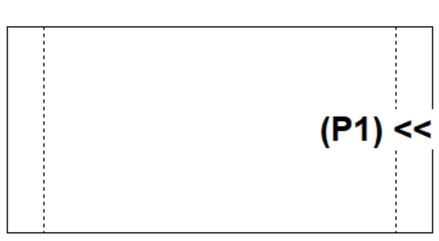

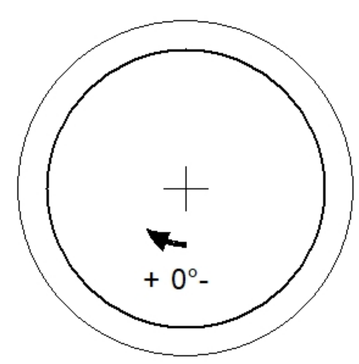

INSIDE WALL DIMENSIONS

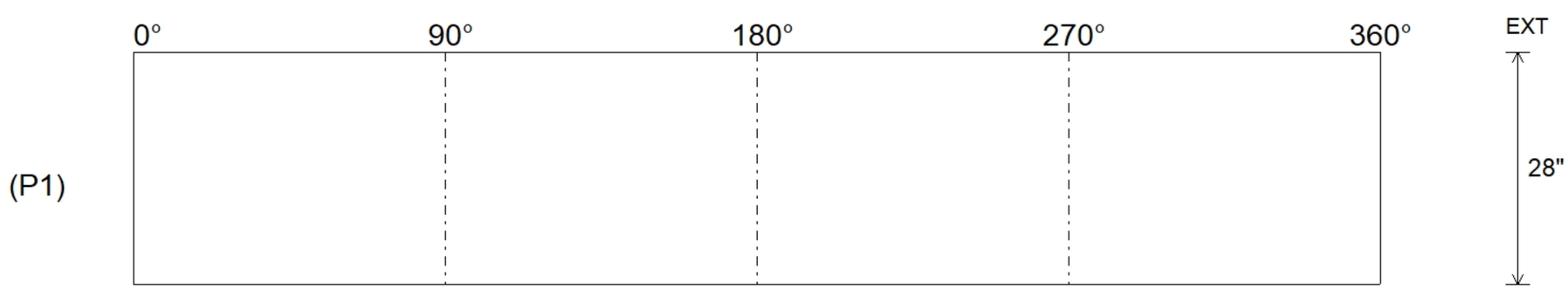

Coating (Int): Coating (Ext):	Seam Up: Flat Seam Dn: Flat	Wall Thickness: 5" Floor Height: 0"	Height (Int): 28" Height (Ext): 28"	Weight (Net): 1956 lb Volume (Net): 0.5cu.yd

Job Name: 26-1453 Clarksville, TN SPC13A Job Location: Clarksville, TN Contractor: Cleary Construction, Inc.	Plant: Beaver Dam 6/23/2026 8:25:01 AM	Tech: J. Coppage PC: C. Goff	

Structure ID: 13A-SS-MH-001

P2 MH048LD12CDARED MH FLAT TOP w/24" Hole ECC w/ConBlock-CDA Red

P3) 24" - CASTING HEIGHT - 6"	0 lb
P2) 48" - MH FLAT TOP w/24" Hole ECC w/ConBlock-CDA Red - 12"	1580 lb
P1) 48" - MH DH RISER Custom Ht, w/ConBlock-CDA Red - 36"	2426 lb
1) JOINT WRAP - 0.065"x6"x50' CONSEAL CS212	0 lb
1) JOINT WRAP PRIMER - CONSEAL CS-75 (1 gal.)	0 lb
1) 48" - Conseal CS-102 1.00" (Double)	0 lb
1) 24" - Conseal CS-102 1.00" (Double)	0 lb
2) DOGHOUSE - 10"x10"	0 lb
1) Z-Lok - C107-3	1 lb
3) MH Step ML-10-TDS-NCR - 10"	0 lb

Structure Total:	4007 lb

Structure Notes: 1. JBS-1155 SANITARY PROVIDED BY ICAST.
2. PER ASTM C478 SPECIFICATIONS.
3. CONCRETE = 4,000 PSI AT 28 DAYS.
4. REINFORCING PER ASTM A615 (GRADE 60).
- TOP SLAB (As .62) #5 BARS AT 6" C.C.E.W..
- RISER/WALLS (As .12)
- FLOOR (As .31) #5 BARS AT 12" C.C.E.W.

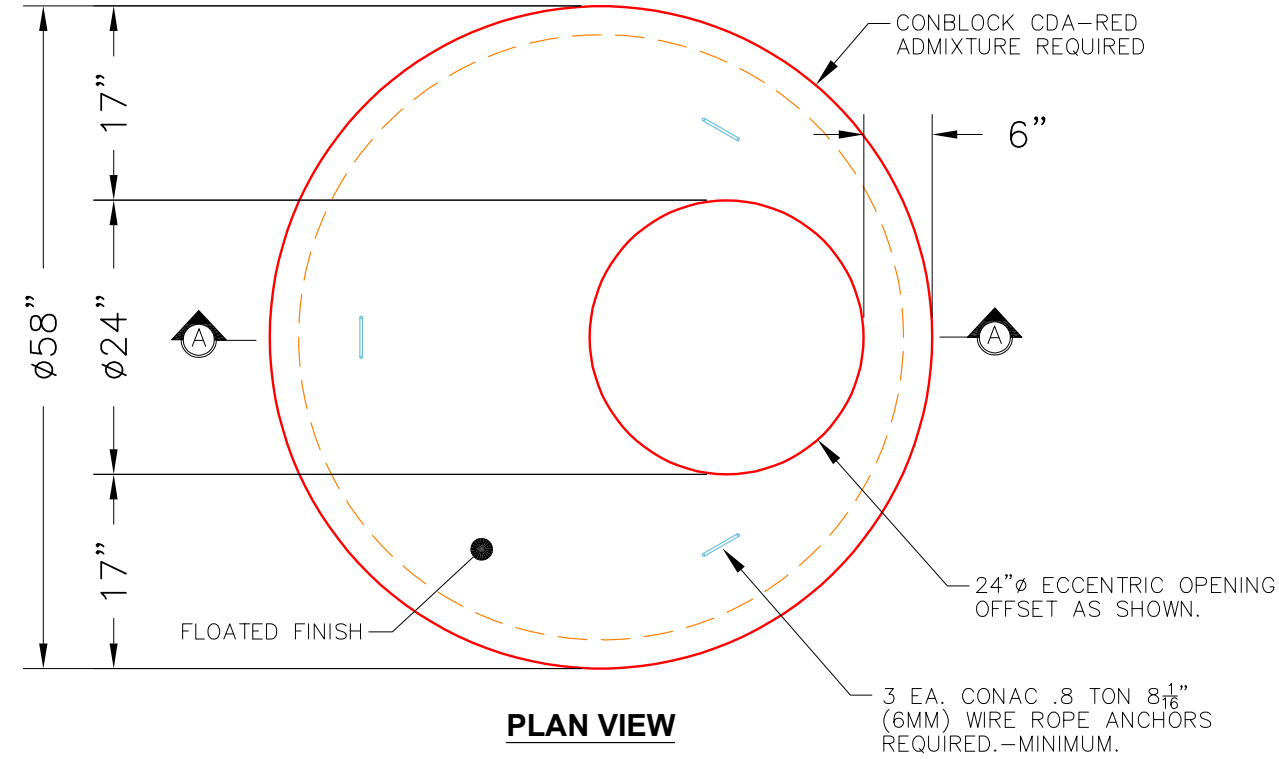

PLAN VIEW

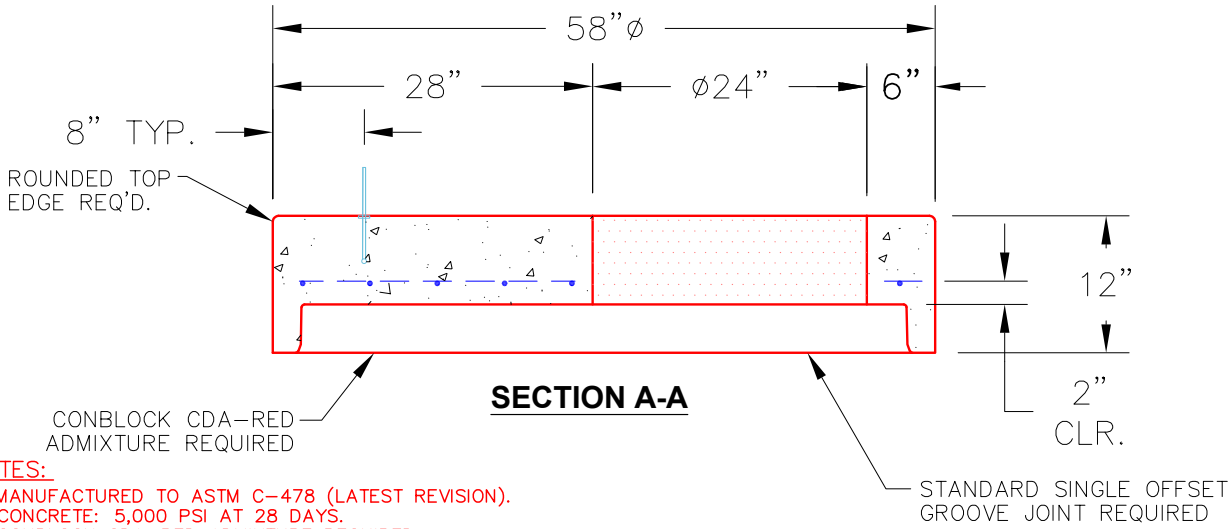

SECTION A-A

NOTES:
1. MANUFACTURED TO ASTM C-478 (LATEST REVISION).
2. CONCRETE: 5,000 PSI AT 28 DAYS.
3. CONBLOCK CDA-RED ADMIXTURE REQUIRED.
4. REINFORCING: #4 BAR @ 10" O.C. E.W. (GRADE 60).

Coating (Int): Coating (Ext):	Seam Up: Flat Seam Dn: Groove	Wall Thickness: 5"	Height (Ext): 12"	Weight (Net): 1580 lb Volume (Net): 0.39cu.yd

Job Name: 26-2080 - The Cumberland Job Location: Bowling Green, KY Contractor: J & J Concrete & Excavating, LLC	Plant: 100 6/22/2026 6:23:31 PM	Tech: Jared - A PC: E. Bradley	

Structure ID: A3 SS-MH

P1 MH048BA36 MH BASE T/n

P3) 24" - CASTING HEIGHT - 7"	0 lb
P2) 48" - ECC CONE w/ 24" HOLE F/G - 42"	3200 lb
P1) 48" - MH BASE T/n - 36"	3782 lb
1) JOINT WRAP - 12" WD x 048" MAC WRAP	0 lb
1) 48" - MH INVERT CHANNEL - FULL HEIGHT	1440 lb
1) CASTING - HOE MC-375 F/C Sanitary	271 lb
1) 48" - Conseal CS-102 1.00" (Double)	0 lb
1) 24" - Conseal CS-102 1.00" (Double)	0 lb
2) A-Lok - 0285	2 lb
6) MH Step ML-10-TDS-NCR - 10"	0 lb
Structure Total:	8695 lb

Structure Notes:
1. PER ASTM C-478 SPECIFICATIONS
2. CONCRETE: 4,000 PSI AT 28 DAYS
3. REINFORCEMENT: PER ASTM A615
4. INVERT CHANNEL REQUIRED
5. STEPS AT 0 DEGREES
6. HOE MC-375 FRAME & COVER "SANITARY" SUPPLIED BY ICAST

Rim: 533.91' Rim to Invert: 7.14' Slack: 2.68' Sump: 2" Step Position: 0°

Position	Elev	Angle	Ext. (cw)	Pipe	Pipe OD	Connector	Hole	Horz Size	Up (_)	Offset
Invert 1	526.77'	0°	0"	8" PVC SDR35	8.5"	A-Lok 0285	9.75"	9.818"	1.125"	0"
Invert 2	526.87'	270°	136.625"	8" PVC SDR35	8.5"	A-Lok 0285	9.75"	9.818"	2.375"	0"
Invert 3										
Invert 4										
Invert 5										
Invert 6										
Invert 7										
Invert 8										

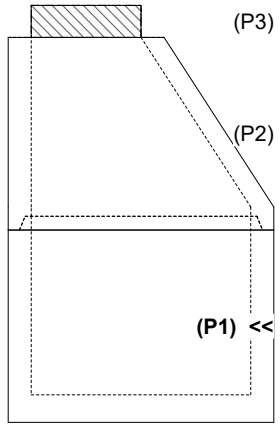

RIGHT-SIDE UP VIEW (int. dimensions)

UPSIDE-DOWN VIEW (int. dimenions)

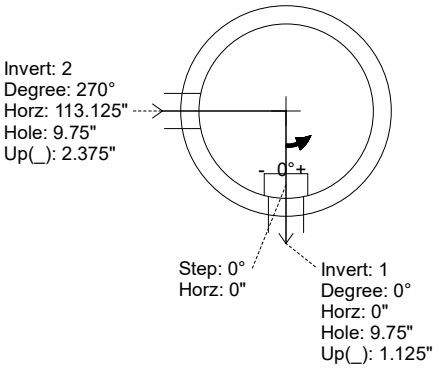

INSIDE WALL DIMENSIONS

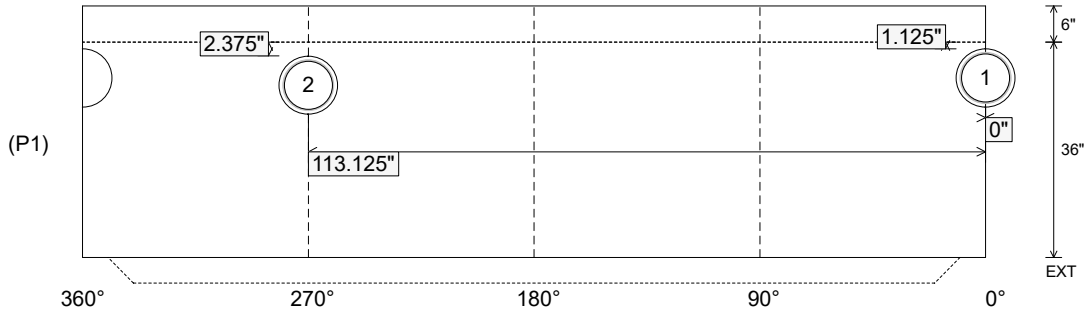

Coating (Int): Coating (Ext):	Seam Up: Tongue Seam Dn: n/a	Wall Thickness: 5" Floor Height: 6"	Height (Int): 36" Height (Ext): 42"	Weight (Net): 3782 lb Volume (Net): 0.97cu.yd

Job Name: 26-2080 - The Cumberland Job Location: Bowling Green, KY Contractor: J & J Concrete & Excavating, LLC	Plant: 100 6/22/2026 6:23:31 PM	Tech: Jared - A PC: E. Bradley	

Structure ID: A3 SS-MH

P1 MH048BA36 MH BASE T/n

P3) 24" - CASTING HEIGHT - 7"	0 lb
P2) 48" - ECC CONE w/ 24" HOLE F/G - 42"	3200 lb
P1) 48" - MH BASE T/n - 36"	3782 lb
1) JOINT WRAP - 12" WD x 048" MAC WRAP	0 lb
1) 48" - MH INVERT CHANNEL - FULL HEIGHT	1440 lb
1) CASTING - HOE MC-375 F/C Sanitary	271 lb
1) 48" - Conseal CS-102 1.00" (Double)	0 lb
1) 24" - Conseal CS-102 1.00" (Double)	0 lb
2) A-Lok - 0285	2 lb
6) MH Step ML-10-TDS-NCR - 10"	0 lb
Structure Total:	8695 lb

Structure Notes:
1. PER ASTM C-478 SPECIFICATIONS
2. CONCRETE: 4,000 PSI AT 28 DAYS
3. REINFORCEMENT: PER ASTM A615
4. INVERT CHANNEL REQUIRED
5. STEPS AT 0 DEGREES
6. HOE MC-375 FRAME & COVER "SANITARY" SUPPLIED BY ICAST

Rim: 533.91' Rim to Invert: 7.14' Slack: 2.68' Sump: 2" Step Position: 0°

Position	Elev	Angle	Ext. (cw)	Pipe	Pipe OD	Connector	Hole	Horz Size	Up (_)	Offset
Invert 1	526.77'	0°	0"	8" PVC SDR35	8.5"	A-Lok 0285	9.75"	9.818"	1.125"	0"
Invert 2	526.87'	270°	136.625"	8" PVC SDR35	8.5"	A-Lok 0285	9.75"	9.818"	2.375"	0"
Invert 3										
Invert 4										
Invert 5										
Invert 6										
Invert 7										
Invert 8										

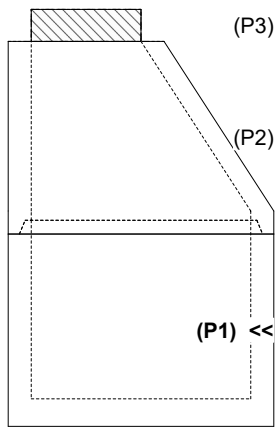

RIGHT-SIDE UP VIEW (int. dimensions)

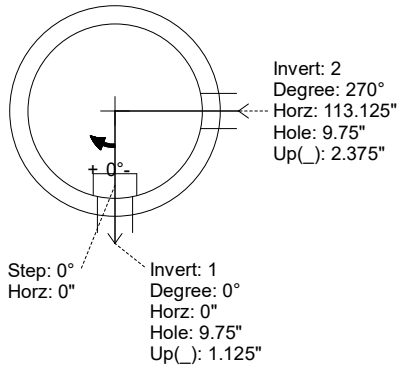

UPSIDE-DOWN VIEW (int. dimenions)

INVERT CHANNEL DRAWING

INSIDE WALL DIMENSIONS

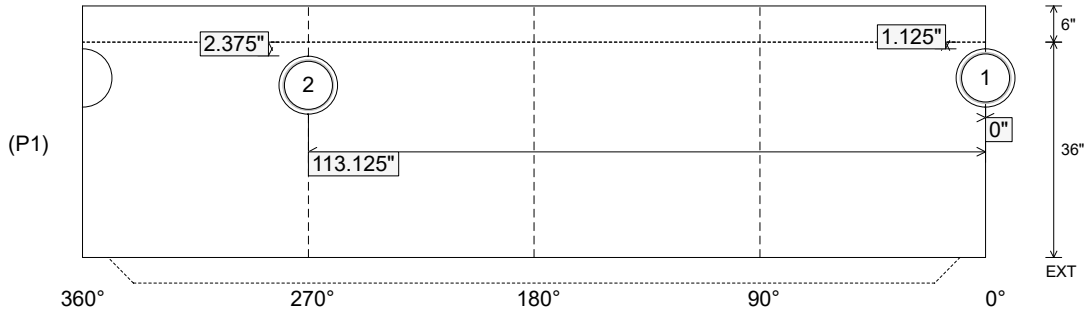

Coating (Int): Coating (Ext):	Seam Up: Tongue Seam Dn: n/a	Wall Thickness: 5" Floor Height: 6"	Height (Int): 36" Height (Ext): 42"	Weight (Net): 3782 lb Volume (Net): 0.97cu.yd

Job Name: 26-2080 - The Cumberland Job Location: Bowling Green, KY Contractor: J & J Concrete & Excavating, LLC	Plant: 100 6/22/2026 6:23:31 PM	Tech: Jared - A PC: E. Bradley	

Structure ID: A2 SS-MH

P1 MH048BAVF **MH BASE Custom Ht T/n**

P4) 24" - CASTING HEIGHT - 7"	0 lb
P3) 48" - ECC CONE w/ 24" HOLE F/G - 24"	1550 lb
P2) 48" - MH RISER T/G - 36"	2515 lb
P1) 48" - MH BASE Custom Ht T/n - 31"	3401 lb
2) JOINT WRAP - 12" WD x 048" MAC WRAP	0 lb
1) 48" - MH INVERT CHANNEL - FULL HEIGHT	1440 lb
1) CASTING - HOE MC-375 F/C Sanitary	271 lb
1) 48" - Conseal CS-102 1.00" (Double)	0 lb
1) 24" - Conseal CS-102 1.00" (Double)	0 lb
3) A-Lok - 0285	3 lb
7) MH Step ML-10-TDS-NCR - 10"	0 lb
Structure Total:	9180 lb

Structure Notes:
1. PER ASTM C-478 SPECIFICATIONS
2. CONCRETE: 4,000 PSI AT 28 DAYS
3. REINFORCEMENT: PER ASTM A615
4. INVERT CHANNEL REQUIRED
5. STEPS AT 0 DEGREES
6. HOE MC-375 FRAME & COVER "SANITARY" SUPPLIED BY ICAST

Rim: 531.37' Rim to Invert: 8.2' Slack: 2.4" Sump: 2" Step Position: 0°

Position	Elev	Angle	Ext. (cw)	Pipe	Pipe OD	Connector	Hole	Horz Size	Up (_)	Offset
Invert 1	523.17'	0°	0"	8" PVC SDR35	8.5"	A-Lok 0285	9.75"	9.818"	1.125"	0"
Invert 2	523.27'	150°	75.875"	8" PVC SDR35	8.5"	A-Lok 0285	9.75"	9.818"	2.375"	0"
Invert 3	523.27'	270°	136.625"	8" PVC SDR35	8.5"	A-Lok 0285	9.75"	9.818"	2.375"	0"
Invert 4										
Invert 5										
Invert 6										
Invert 7										
Invert 8										

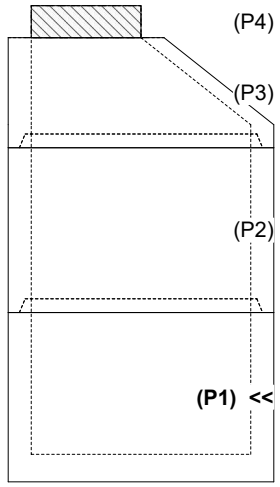

RIGHT-SIDE UP VIEW (int. dimensions)

UPSIDE-DOWN VIEW (int. dimenions)

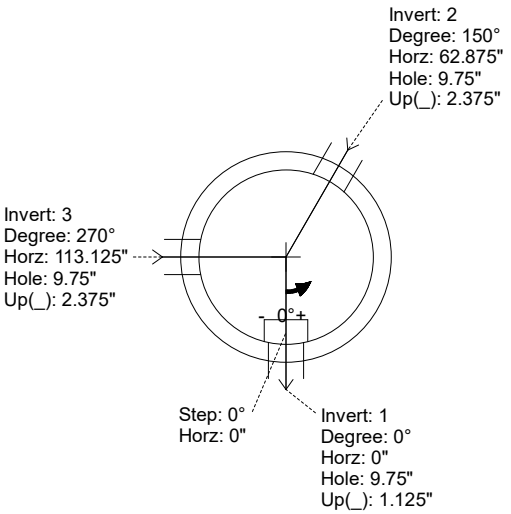

INSIDE WALL DIMENSIONS

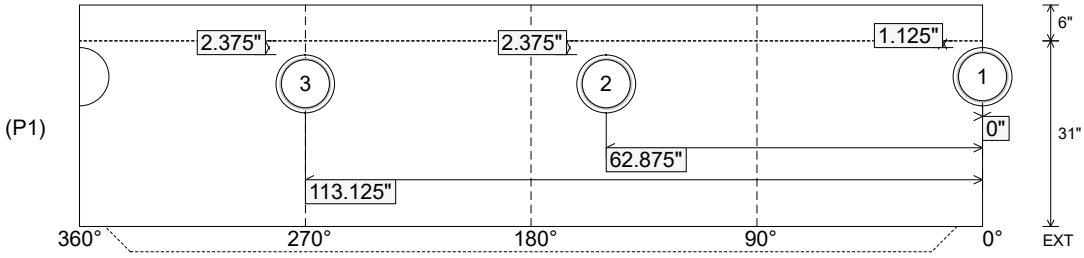

Coating (Int): Coating (Ext):	Seam Up: Tongue Seam Dn: n/a	Wall Thickness: 5" Floor Height: 6"	Height (Int): 31" Height (Ext): 37"	Weight (Net): 3401 lb Volume (Net): 0.87cu.yd

Job Name: 26-2080 - The Cumberland Job Location: Bowling Green, KY Contractor: J & J Concrete & Excavating, LLC	Plant: 100 6/22/2026 6:23:31 PM	Tech: Jared - A PC: E. Bradley	

Structure ID: A2 SS-MH

P1 MH048BAVF **MH BASE Custom Ht T/n**

P4) 24" - CASTING HEIGHT - 7"	0 lb
P3) 48" - ECC CONE w/ 24" HOLE F/G - 24"	1550 lb
P2) 48" - MH RISER T/G - 36"	2515 lb
P1) 48" - MH BASE Custom Ht T/n - 31"	3401 lb
2) JOINT WRAP - 12" WD x 048" MAC WRAP	0 lb
1) 48" - MH INVERT CHANNEL - FULL HEIGHT	1440 lb
1) CASTING - HOE MC-375 F/C Sanitary	271 lb
1) 48" - Conseal CS-102 1.00" (Double)	0 lb
1) 24" - Conseal CS-102 1.00" (Double)	0 lb
3) A-Lok - 0285	3 lb
7) MH Step ML-10-TDS-NCR - 10"	0 lb
Structure Total:	9180 lb

Structure Notes:
1. PER ASTM C-478 SPECIFICATIONS
2. CONCRETE: 4,000 PSI AT 28 DAYS
3. REINFORCEMENT: PER ASTM A615
4. INVERT CHANNEL REQUIRED
5. STEPS AT 0 DEGREES
6. HOE MC-375 FRAME & COVER "SANITARY" SUPPLIED BY ICAST

Rim: 531.37' Rim to Invert: 8.2' Slack: 2.4" Sump: 2" Step Position: 0°

Position	Elev	Angle	Ext. (cw)	Pipe	Pipe OD	Connector	Hole	Horz Size	Up (_)	Offset
Invert 1	523.17'	0°	0"	8" PVC SDR35	8.5"	A-Lok 0285	9.75"	9.818"	1.125"	0"
Invert 2	523.27'	150°	75.875"	8" PVC SDR35	8.5"	A-Lok 0285	9.75"	9.818"	2.375"	0"
Invert 3	523.27'	270°	136.625"	8" PVC SDR35	8.5"	A-Lok 0285	9.75"	9.818"	2.375"	0"
Invert 4										
Invert 5										
Invert 6										
Invert 7										
Invert 8										

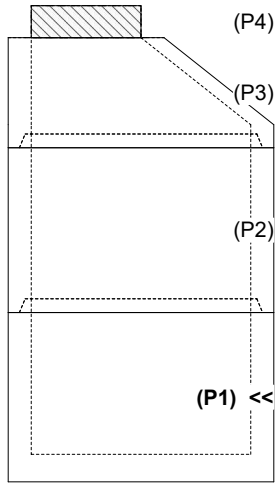

RIGHT-SIDE UP VIEW (int. dimensions)

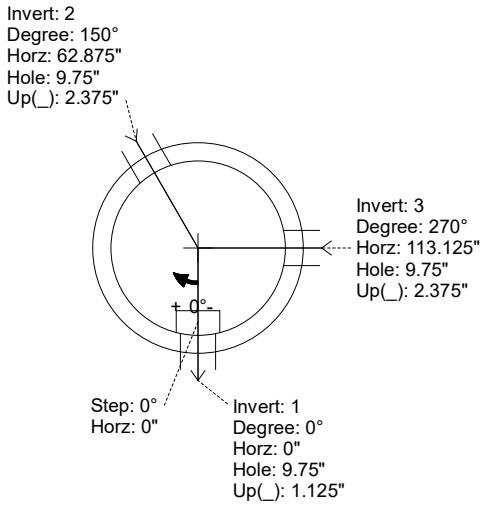

UPSIDE-DOWN VIEW (int. dimenions)

INVERT CHANNEL DRAWING

INSIDE WALL DIMENSIONS

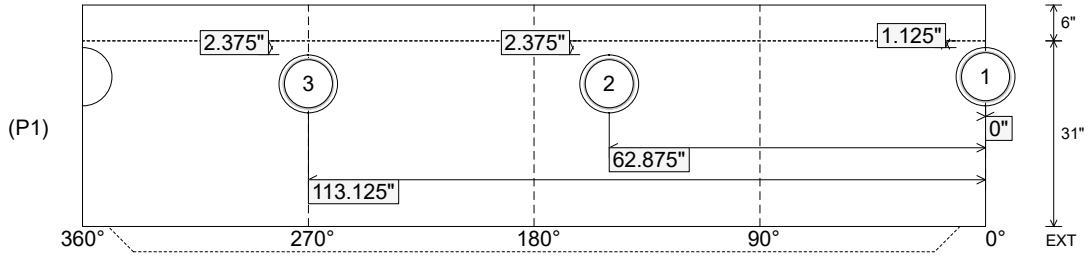

Coating (Int): Coating (Ext):	Seam Up: Tongue Seam Dn: n/a	Wall Thickness: 5" Floor Height: 6"	Height (Int): 31" Height (Ext): 37"	Weight (Net): 3401 lb Volume (Net): 0.87cu.yd

Job Name: 26-2080 - The Cumberland Job Location: Bowling Green, KY Contractor: J & J Concrete & Excavating, LLC	Plant: 100 6/22/2026 6:23:27 PM	Tech: Jared - A PC: E. Bradley	

Structure ID: C6 ST-MH

P1 MH048BAVF **MH BASE Custom Ht F/n**

P3) 24" - CASTING HEIGHT - 7"	0 lb
P2) 48" - MH FLAT TOP w/ 24" ECC Hole F/F - 7"	1286 lb
P1) 48" - MH BASE Custom Ht F/n - 23"	2570 lb
1) CASTING - HOE MC-375 F/C Storm	271 lb
1) 48" - Conseal CS-102 1.00"	0 lb
1) 24" - Conseal CS-102 1.00"	0 lb
1) DOGHOUSE INVRTD - 24"x23"	0 lb
1) Hole - 20	0 lb
2) MH Step ML-10-TDS-NCR - 10"	0 lb
Structure Total:	4127 lb

Structure Notes:
1. PER ASTM C-478 SPECIFICATIONS
2. CONCRETE: 4,000 PSI AT 28 DAYS
3. REINFORCEMENT: PER ASTM A615
4. STEPS AT 225.5 DEGREES
5. HOE MC-375 FRAME & COVER "STORM" SUPPLIED BY ICAST

Rim: 531.06' Rim to Invert: 3.13' Slack: 0.56" Sump: 0" Step Position: 225.5°

Position	Elev	Angle	Ext. (cw)	Pipe	Pipe OD	Connector	Hole	Horz Size	Up (_)	Offset
Invert 1	527.93'	0°	0"	18" HDPE	21.2"	DOGHOUSE INVRTD 24"x23"	24" x 23"	25.133"	-1.625"	0"
Invert 2	527.93'	91°	46"	15" HDPE	17.6"	Hole 20	20"	20.629"	-1.25"	0"
Invert 3										
Invert 4										
Invert 5										
Invert 6										
Invert 7										
Invert 8										

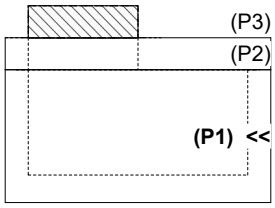

RIGHT-SIDE UP VIEW (int. dimensions)

UPSIDE-DOWN VIEW (int. dimenions)

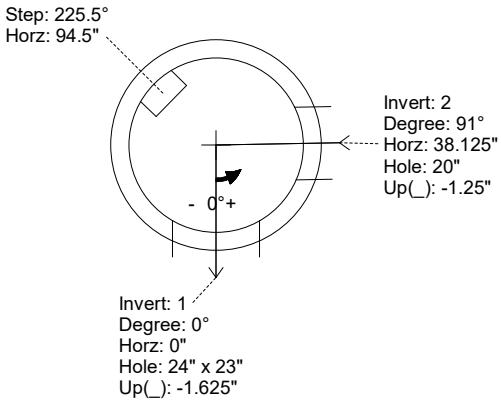

INSIDE WALL DIMENSIONS

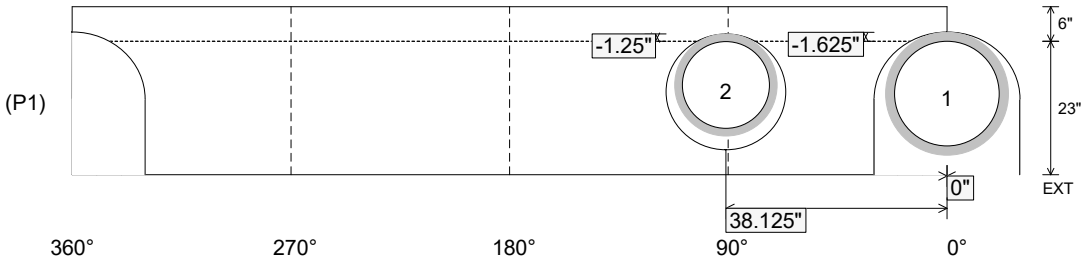

Coating (Int): Coating (Ext):	Seam Up: Flat Seam Dn: n/a	Wall Thickness: 5" Floor Height: 6"	Height (Int): 23" Height (Ext): 29"	Weight (Net): 2570 lb Volume (Net): 0.66cu.yd

Job Name: 26-2080 - The Cumberland Job Location: Bowling Green, KY Contractor: J & J Concrete & Excavating, LLC	Plant: 100 6/22/2026 6:23:27 PM	Tech: Jared - A PC: E. Bradley	

Structure ID: C5 ST-CI

P1 MH048BA42 MH BASE T/n

P3) 24" x 36" - CASTING HEIGHT - 6"	0 lb
P2) 48" - MH FLAT TOP w/24"x36" Hole F/G - 12"	1300 lb
P1) 48" - MH BASE T/n - 42"	3665 lb
1) CASTING - HOE 525 SET (F/G/H)	442 lb
1) 48" - Conseal CS-102 1.00"	0 lb
1) 24" x 36" - Conseal CS-102 1.00"	0 lb
1) Hole - 30	0 lb
1) Hole - 16	0 lb
1) Hole - 24	0 lb
3) MH Step ML-10-TDS-NCR - 10"	0 lb
Structure Total:	5407 lb

Structure Notes:
1. PER ASTM C-478 SPECIFICATIONS
2. CONCRETE: 4,000 PSI AT 28 DAYS
3. REINFORCEMENT: PER ASTM A615
4. STEPS AT 180 DEGREES
5. HOE 525 FRAME, FLAT GRATE, & CURB HOOD SUPPLIED BY ICAST

Rim: 532.75' Rim to Invert: 5.07' Slack: 2.74" Sump: 1.9" Step Position: 180°

Position	Elev	Angle	Ext. (cw)	Pipe	Pipe OD	Connector	Hole	Horz Size	Up (_)	Offset
Invert 1	527.68'	0°	0"	24" HDPE	27.8"	Hole 30	30"	32.406"	0"	0"
Invert 2	527.68'	90°	45.5"	12" HDPE	14.5"	Hole 16	16"	16.312"	0.625"	0"
Invert 3	527.68'	270°	136.625"	18" HDPE	21.2"	Hole 24	24"	25.133"	0.25"	0"
Invert 4										
Invert 5										
Invert 6										
Invert 7										
Invert 8										

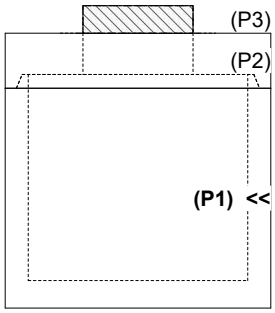

RIGHT-SIDE UP VIEW (int. dimensions)

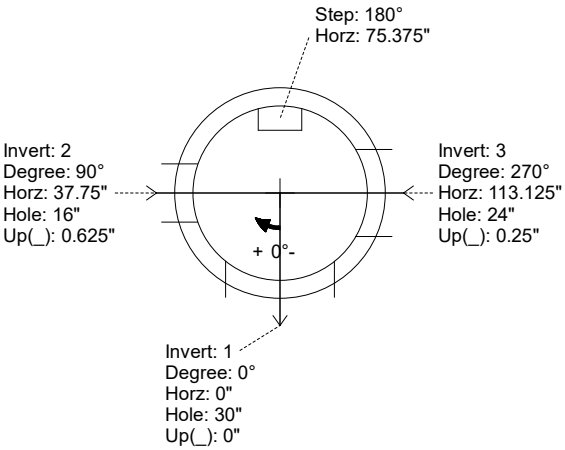

UPSIDE-DOWN VIEW (int. dimenions)

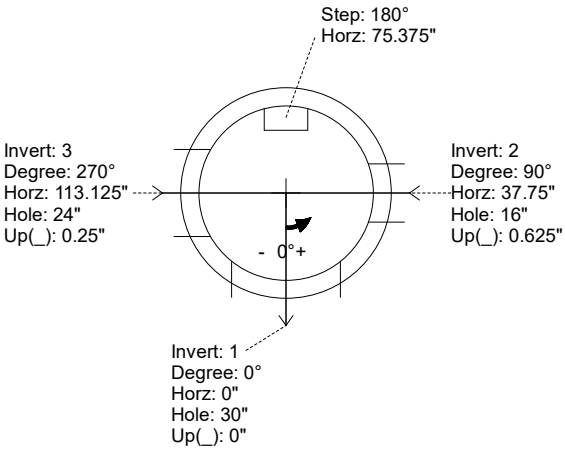

INSIDE WALL DIMENSIONS

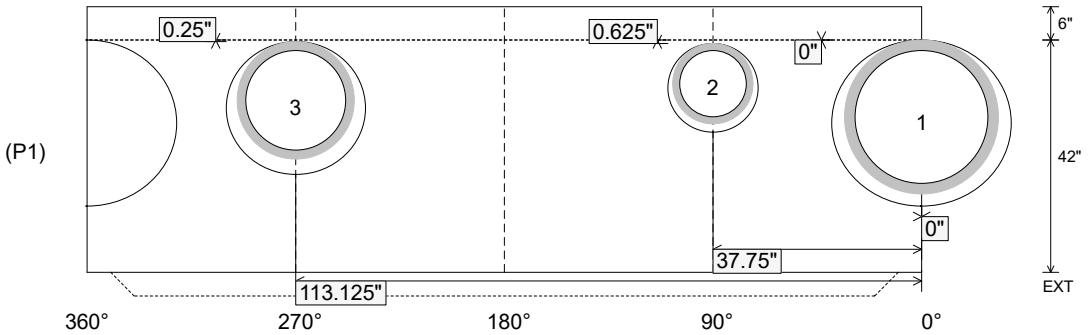

Coating (Int): Coating (Ext):	Seam Up: Tongue Seam Dn: n/a	Wall Thickness: 5" Floor Height: 6"	Height (Int): 42" Height (Ext): 48"	Weight (Net): 3665 lb Volume (Net): 0.94cu.yd

Job Name: 26-2080 - The Cumberland Job Location: Bowling Green, KY Contractor: J & J Concrete & Excavating, LLC	Plant: 100 6/22/2026 6:23:26 PM	Tech: Jared - A PC: E. Bradley	

Structure ID: C4 ST-CI

P1 MH048BA42 MH BASE T/n

P3) 24" x 36" - CASTING HEIGHT - 6"	0 lb
P2) 48" - MH FLAT TOP w/24"x36" Hole F/G - 12"	1300 lb
P1) 48" - MH BASE T/n - 42"	3632 lb
1) CASTING - HOE 525 SET (F/G/H)	442 lb
1) 48" - Conseal CS-102 1.00"	0 lb
1) 24" x 36" - Conseal CS-102 1.00"	0 lb
2) Hole - 30	0 lb
3) MH Step ML-10-TDS-NCR - 10"	0 lb
Structure Total:	5374 lb

Structure Notes:
1. PER ASTM C-478 SPECIFICATIONS
2. CONCRETE: 4,000 PSI AT 28 DAYS
3. REINFORCEMENT: PER ASTM A615
4. STEPS AT 132 DEGREES
5. HOE 525 FRAME, FLAT GRATE, & CURB HOOD SUPPLIED BY ICAST

Rim: 532.09' Rim to Invert: 5.03' Slack: 2.26" Sump: 1.9" Step Position: 132°

Position	Elev	Angle	Ext. (cw)	Pipe	Pipe OD	Connector	Hole	Horz Size	Up (_)	Offset
Invert 1	527.06'	0°	0"	24" HDPE	27.8"	Hole 30	30"	32.406"	0"	0"
Invert 2	527.06'	222°	112.375"	24" HDPE	27.8"	Hole 30	30"	32.406"	0"	0"
Invert 3										
Invert 4										
Invert 5										
Invert 6										
Invert 7										
Invert 8										

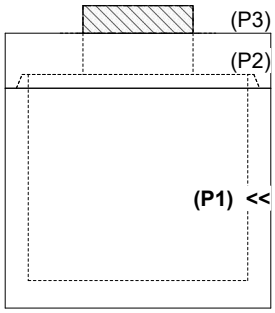

RIGHT-SIDE UP VIEW (int. dimensions)

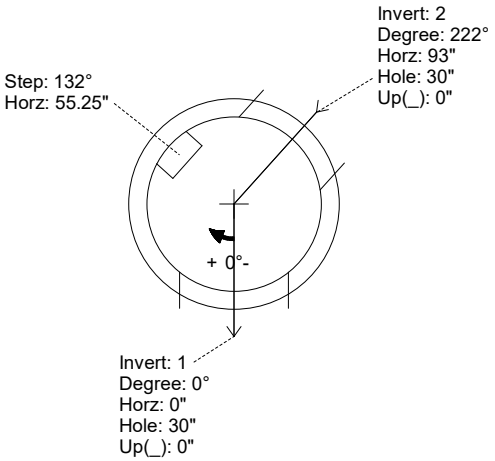

UPSIDE-DOWN VIEW (int. dimenions)

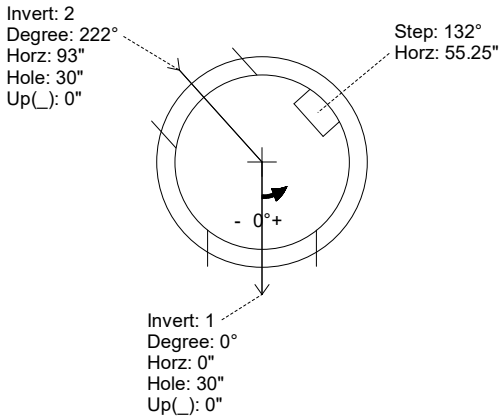

INSIDE WALL DIMENSIONS

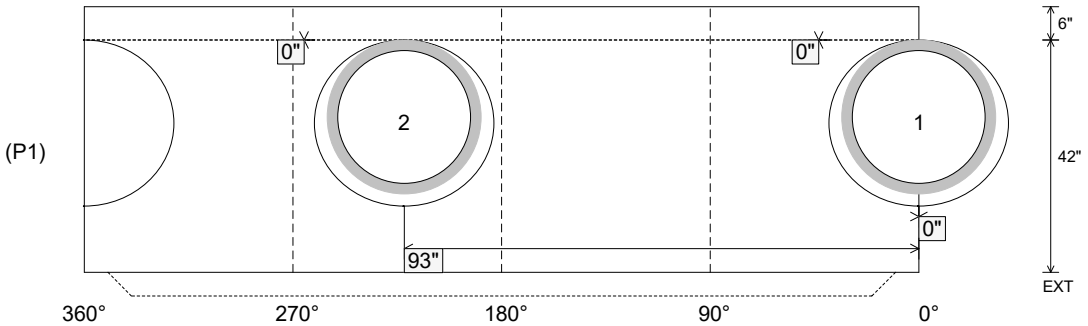

Coating (Int): Coating (Ext):	Seam Up: Tongue Seam Dn: n/a	Wall Thickness: 5" Floor Height: 6"	Height (Int): 42" Height (Ext): 48"	Weight (Net): 3632 lb Volume (Net): 0.93cu.yd

Job Name: 26-2369 - Noel Avenue Doghouse MH Job Location: Madisonville, KY Contractor: Luttrell & Sons, LLC	Plant: 100 6/22/2026 11:25:36 AM	Tech: Jared - F PC: A. Chambers	

Structure ID: QL1 SS-MHDH

P1 MH048DHVFX **MH DH RISER Custom Ht, w/XYPEX NO STEPS T/F**

P3) 24" - CASTING HEIGHT - 7"	0 lb
P2) 48" - XYPEX MH FLAT TOP w/24" ECC Hole F/G - 12"	2205 lb
P1) 48" - MH DH RISER Custom Ht, w/XYPEX NO STEPS T/F - 57"	3738 lb
1) JOINT WRAP - 0.065"x6"x50' CONSEAL CS212	0 lb
1) JOINT WRAP PRIMER - CONSEAL CS-75 (1 gal.)	0 lb
1) ADMIXTURE XYPEX C-500 NF RED	0 lb
1) 48" - Conseal CS-102 1.00" (Double)	0 lb
1) 24" - Conseal CS-102 1.00" (Double)	0 lb
2) DOGHOUSE - 16"x20"	0 lb
Structure Total:	5943 lb

Structure Notes: .
1. PER ASTM C478 SPECIFICATIONS.
2. CONCRETE = 4,000 PSI AT 28 DAYS.
3. NO STEPS
4. ADMIXTURE = XYPEX C-500 NF RED
5. (CASTING PROVIDED BY OTHERS MC-315)

.
REINFORCING PER ASTM A615 (GRADE 60).
- TOP SLAB = H20 LOADING
- RISER (As .12)

Rim: 6' Rim to Invert: 6' Slack: 0.4" Sump: 4.4" Step Position:

Position	Elev	Angle	Ext. (cw)	Pipe	Pipe OD	Connector	Hole	Horz Size	Up (_)	Offset
Invert 1	0'	0°	0"	12" PVC C900	13.2"	DOGHOUSE 16"x20"	16" x 20"	16.312"	0"	0"
Invert 2	0'	180°	91.125"	12" PVC C900	13.2"	DOGHOUSE 16"x20"	16" x 20"	16.312"	0"	0"
Invert 3										
Invert 4										
Invert 5										
Invert 6										
Invert 7										
Invert 8										

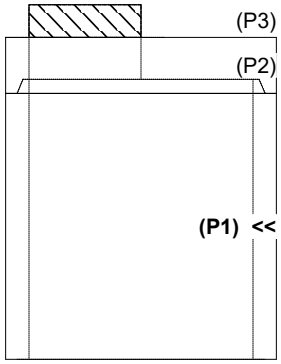

RIGHT-SIDE UP VIEW (int. dimensions)

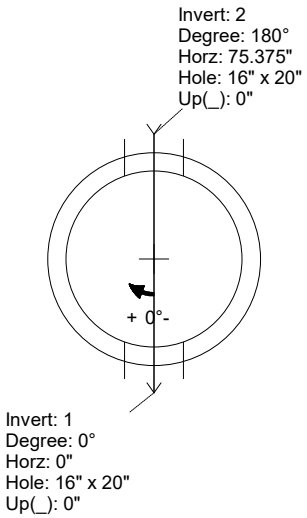

UPSIDE-DOWN VIEW (int. dimenions)

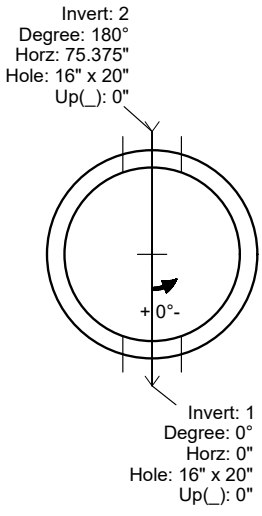

INSIDE WALL DIMENSIONS

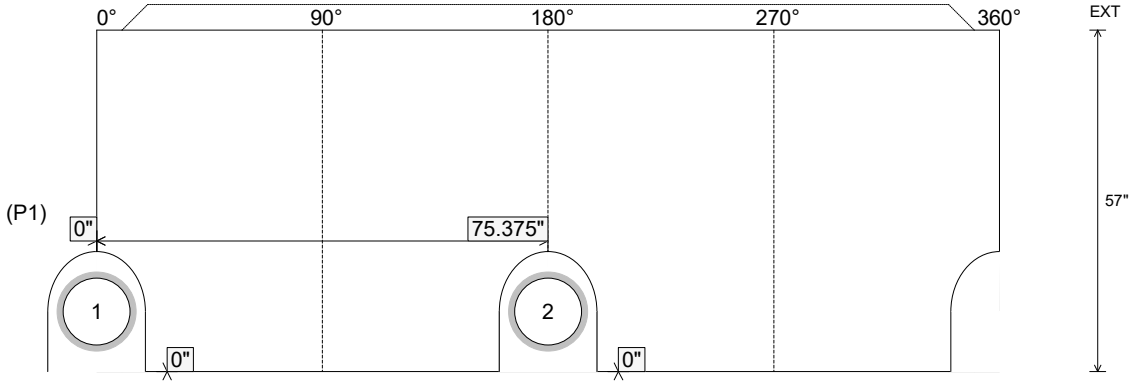

Coating (Int): Coating (Ext):	Seam Up: Tongue Seam Dn: Flat	Wall Thickness: 5" Floor Height: 0"	Height (Int): 57" Height (Ext): 57"	Weight (Net): 3738 lb Volume (Net): 0.96cu.yd

Job Name: 25-3062 Portland Bypass
Job Location: Portland, TN
Contractor: Scotty's Contracting & Stone, LLC

PC: C. Goff
TECH: J. Coppage
Plant: Beaver Dam

Structure ID: **JB-1**

Spec: Storm	Rim: 811.74'	Sump: 3"	Floor (Bot): 807.15'
Type: STM.MH	Invert: 807.9'	Floor (Top): 807.65'	Overall Height: 4.583'
Size: 48"	Rim to Invert: 3.84'	Floor Height: 6"	Slack: 0.08"

Structure Notes: 1. PER ASTM C478 SPECIFICATIONS.
2. CONCRETE = 4,000 PSI AT 28 DAYS.
3. REINFORCING PER TDOT DRAWING D-RJB-1
ASTM A615 (GRADE 60).

STRUCTURE SUMMARY:

P2) 48" - MH FLAT TOP SPEC. HT. (8") SOLID - 8"	1214 lb
P1) 48" - MH BASE Custom Ht - 41"	3468 lb
1) 48" - Conseal CS-102 1.00"	0 lb
2) Hole - 32	0 lb
Structure Total:	4681 lb

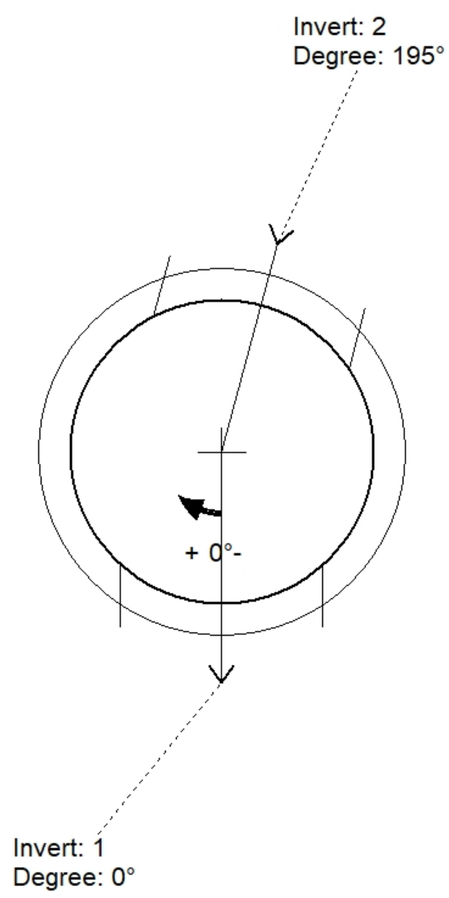

Position	Elev	Angle	Pipe	Pipe OD	Hole	Connector	Up (_)	Ref
Rim	811.74'							
Reducer								
Invert 1	807.9'	0°	24" RCP B WALL	30"	32"	Hole 32	0"	P1
Invert 2	807.9'	195°	24" RCP B WALL	30"	32"	Hole 32	0"	P1
Invert 3								
Invert 4								
Invert 5								
Invert 6								
Invert 7								
Invert 8								

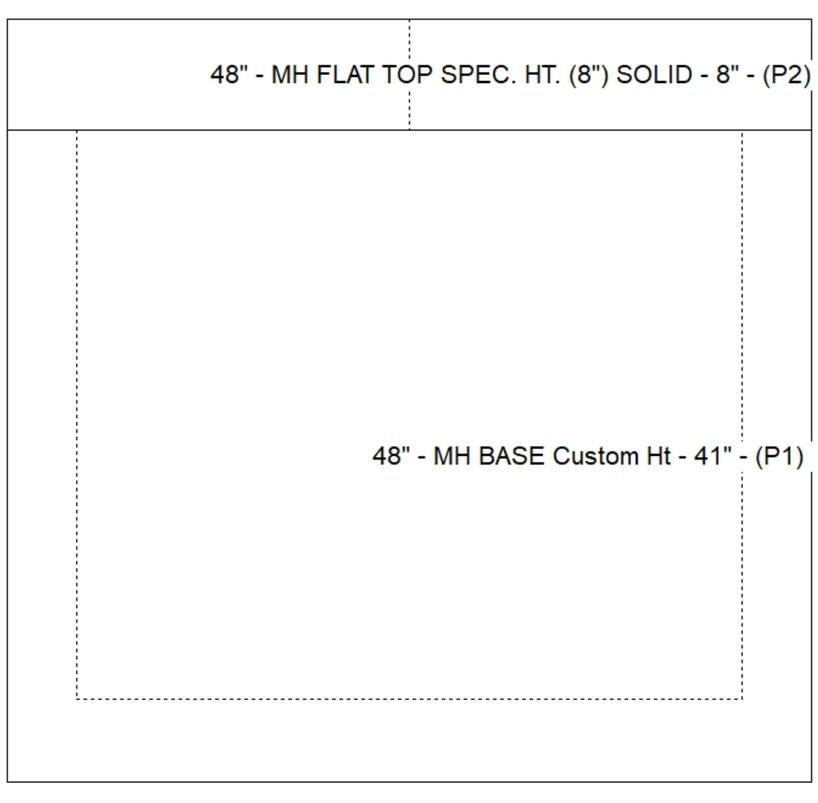

Default - Interior Dimensions

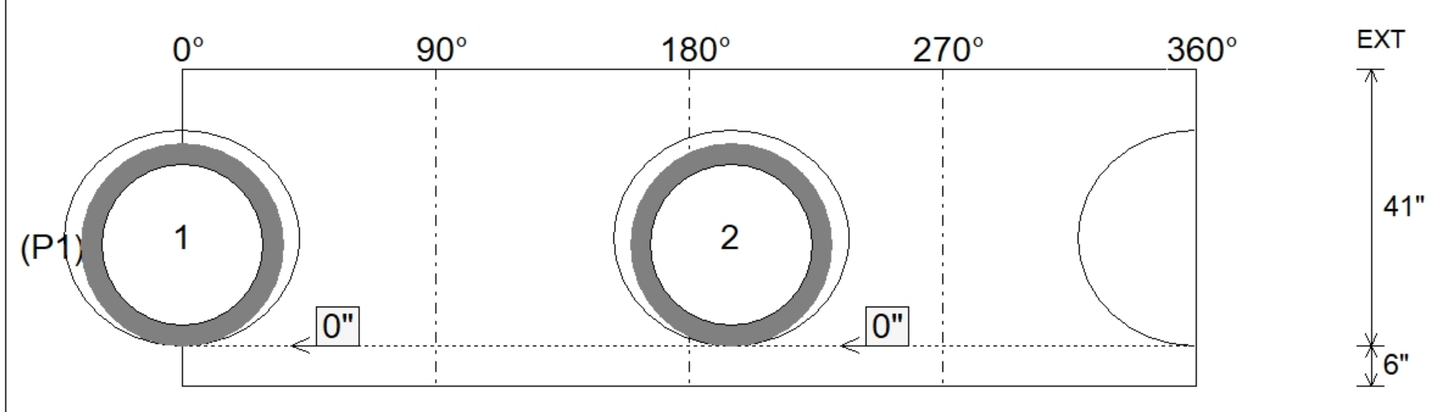

Submittal Drawing
6/4/2026 2:22:20 PM

SUBMITTAL
APPROVED BY:

Job Name: 25-3062 Portland Bypass
Job Location: Portland, TN
Contractor: Scotty's Contracting & Stone, LLC

PC: C. Goff
TECH: J. Coppage
Plant: Beaver Dam

Structure ID: **JB-1**

Spec: Storm	Rim: 811.74'	Sump: 3"	Floor (Bot): 807.15'
Type: STM.MH	Invert: 807.9'	Floor (Top): 807.65'	Overall Height: 4.583'
Size: 48"	Rim to Invert: 3.84'	Floor Height: 6"	Slack: 0.08"

Structure Notes: 1. PER ASTM C478 SPECIFICATIONS.
2. CONCRETE = 4,000 PSI AT 28 DAYS.
3. REINFORCING PER TDOT DRAWING D-RJB-1
ASTM A615 (GRADE 60).

STRUCTURE SUMMARY:

P2) 48" - MH FLAT TOP SPEC. HT. (8") SOLID - 8"	1214 lb
P1) 48" - MH BASE Custom Ht - 41"	3468 lb
1) 48" - Conseal CS-102 1.00"	0 lb
2) Hole - 32	0 lb
Structure Total:	4681 lb

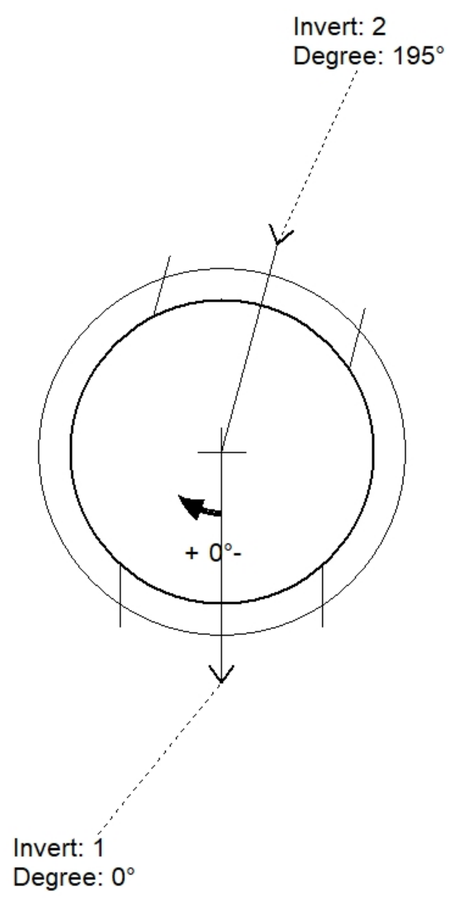

Position	Elev	Angle	Pipe	Pipe OD	Hole	Connector	Up (_)	Ref
Rim	811.74'							
Reducer								
Invert 1	807.9'	0°	24" RCP B WALL	30"	32"	Hole 32	0"	P1
Invert 2	807.9'	195°	24" RCP B WALL	30"	32"	Hole 32	0"	P1
Invert 3								
Invert 4								
Invert 5								
Invert 6								
Invert 7								
Invert 8								

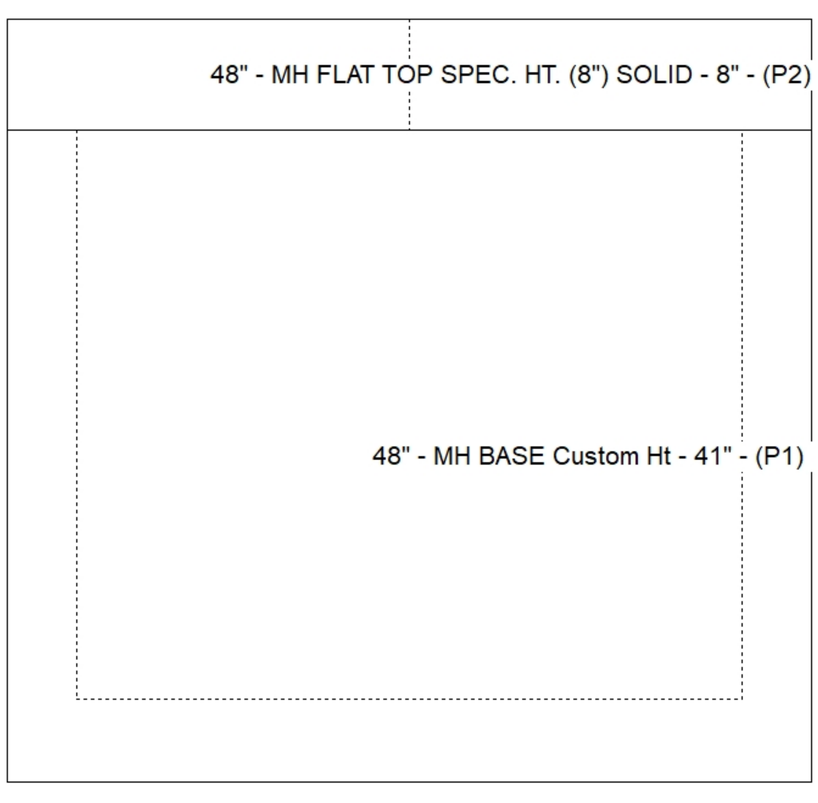

Default - Interior Dimensions

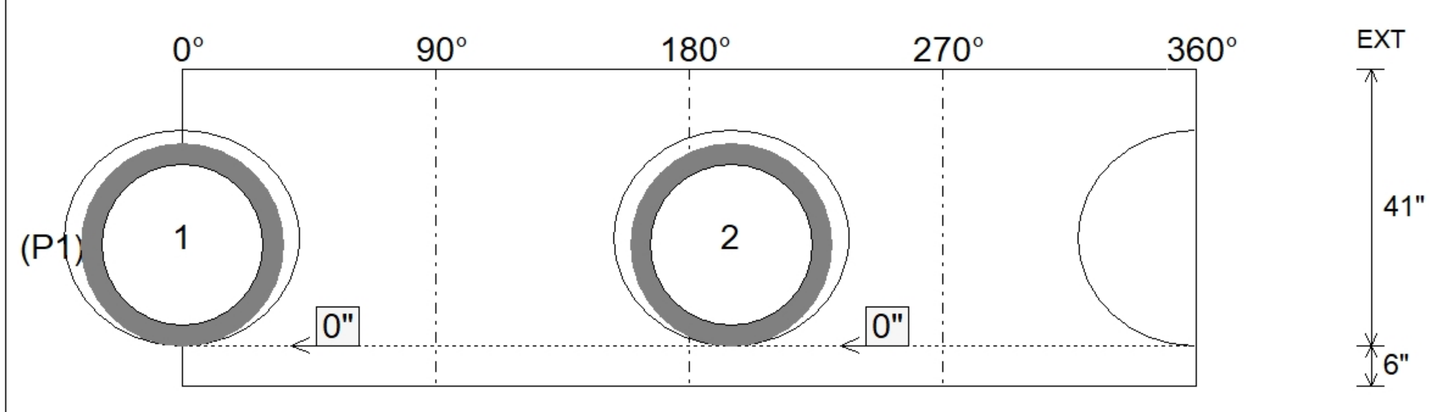

Submittal Drawing
6/4/2026 2:22:20 PM

SUBMITTAL
APPROVED BY:

Job Name: 25-1401 Irwin Landing Ph. 1 Job Location: Murfreesboro, TN Contractor: Bear Construction LLC	Plant: Beaver Dam 6/9/2026 10:37:05 AM	Tech: S. Felletter PC: Erica Bradley	

Structure ID: R17

P1 MH048BA72 MH BASE T/n

P3) 28" x 28" - CASTING HEIGHT - 5"	0 lb
P2) 48" - MH FLAT TOP w/28"x28" Hole F/G - 12"	1368 lb
P1) 48" - MH BASE T/n - 72"	5660 lb
1) 48" - STORM INVERT CHANNEL - 1/4 HEIGHT	1075 lb
1) CASTING - JBS 3104-V SINGLE SET	250 lb
1) 48" - Conseal CS-102 1.00"	0 lb
1) 28" x 28" - Conseal CS-102 1.00"	0 lb
3) Hole - 26	0 lb
6) MH Step ML-10-TDS-NCR - 10"	0 lb
Structure Total:	8353 lb

Structure Notes: .
1. PER ASTM C478 SPECIFICATIONS.
2. CONCRETE = 4,000 PSI AT 28 DAYS.
3. CASTING BY ICAST (JBS-3104 SINGLE SET).
.
REINFORCING PER ASTM A615 (GRADE 60).
- TOP SLAB (As .62) #5 BARS AT 6" C.C.E.W..
- RISER/WALLS (As .12)
- FLOOR (As .31) #5 BARS AT 12" C.C.E.W.

Rim: 578.51' Rim to Invert: 7.42' Slack: 2.54" Sump: 2.5" Step Position: 270°

Position	Elev	Angle	Ext. (cw)	Pipe	Pipe OD	Connector	Hole	Horz Size	Up (_)	Offset
Invert 1	571.09'	0°	0"	18" RCP B WALL	23"	Hole 26	26"	27.476"	0"	0"
Invert 2	574.5'	90°	45.553"	18" RCP B WALL	23"	Hole 26	26"	27.476"	40.92"	0"
Invert 3	571.09'	180°	91.106"	18" RCP B WALL	23"	Hole 26	26"	27.476"	0"	0"
Invert 4										
Invert 5										
Invert 6										
Invert 7										
Invert 8										

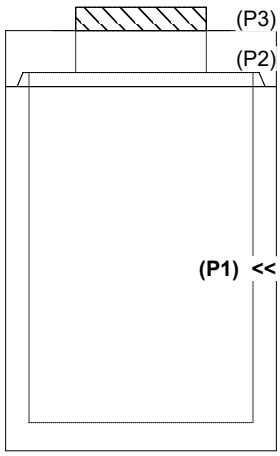

RIGHT-SIDE UP VIEW (int. dimensions)

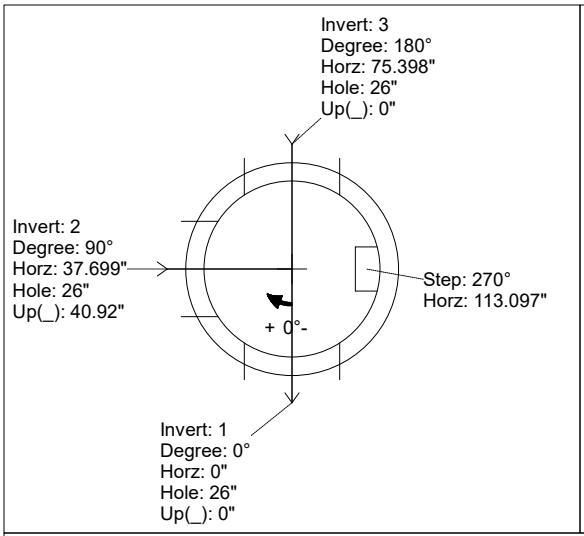

UPSIDE-DOWN VIEW (int. dimenions)

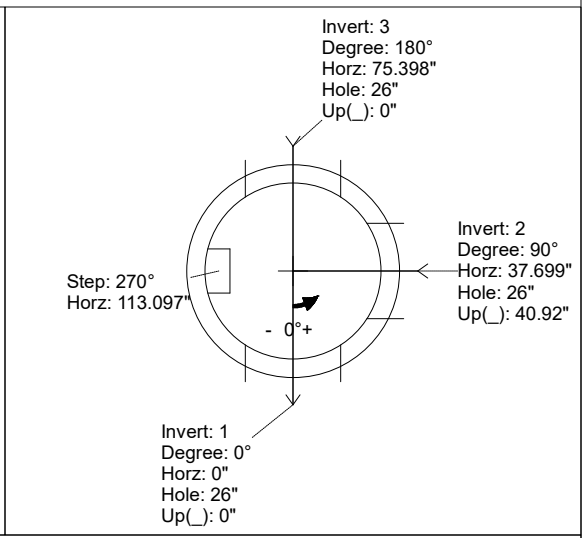

INSIDE WALL DIMENSIONS

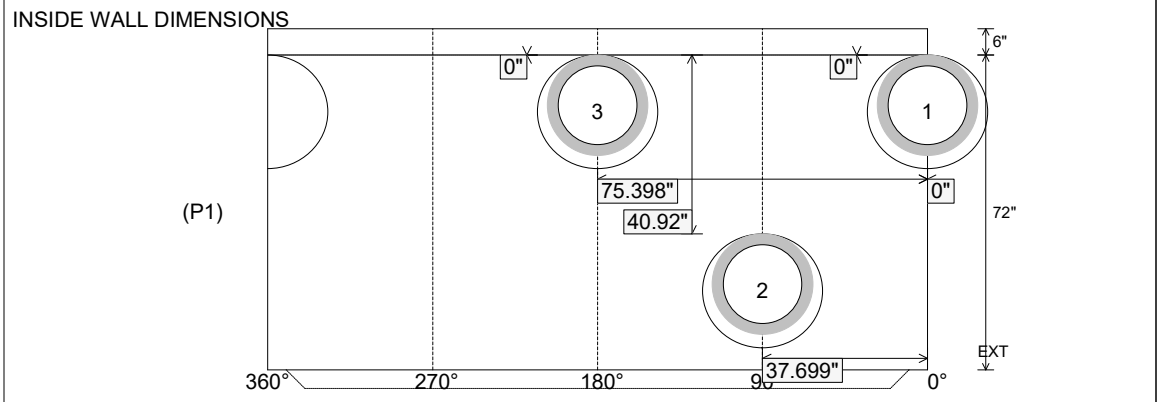

Coating (Int): Coating (Ext):	Seam Up: Tongue Seam Dn: n/a	Wall Thickness: 5" Floor Height: 6"	Height (Int): 72" Height (Ext): 78"	Weight (Net): 5660 lb Volume (Net): 1.45cu.yd

Job Name: 25-1401 Irwin Landing Ph. 1 Job Location: Murfreesboro, TN Contractor: Bear Construction LLC	Plant: Beaver Dam 6/9/2026 10:37:05 AM	Tech: S. Felletter PC: Erica Bradley	

Structure ID: R17

P1 MH048BA72 MH BASE T/n

P3) 28" x 28" - CASTING HEIGHT - 5"	0 lb
P2) 48" - MH FLAT TOP w/28"x28" Hole F/G - 12"	1368 lb
P1) 48" - MH BASE T/n - 72"	5660 lb
1) 48" - STORM INVERT CHANNEL - 1/4 HEIGHT	1075 lb
1) CASTING - JBS 3104-V SINGLE SET	250 lb
1) 48" - Conseal CS-102 1.00"	0 lb
1) 28" x 28" - Conseal CS-102 1.00"	0 lb
3) Hole - 26	0 lb
6) MH Step ML-10-TDS-NCR - 10"	0 lb
Structure Total:	8353 lb

Structure Notes: .
1. PER ASTM C478 SPECIFICATIONS.
2. CONCRETE = 4,000 PSI AT 28 DAYS.
3. CASTING BY ICAST (JBS-3104 SINGLE SET).
.
REINFORCING PER ASTM A615 (GRADE 60).
- TOP SLAB (As .62) #5 BARS AT 6" C.C.E.W..
- RISER/WALLS (As .12)
- FLOOR (As .31) #5 BARS AT 12" C.C.E.W.

Invert channel drawing
1/4 Height storm invert

Rim: 578.51' Rim to Invert: 7.42' Slack: 2.54" Sump: 2.5" Step Position: 270°

Position	Elev	Angle	Ext. (cw)	Pipe	Pipe OD	Connector	Hole	Horz Size	Up (_)	Offset
Invert 1	571.09'	0°	0"	18" RCP B WALL	23"	Hole 26	26"	27.476"	0"	0"
Invert 2	574.5'	90°	45.553"	18" RCP B WALL	23"	Hole 26	26"	27.476"	40.92"	0"
Invert 3	571.09'	180°	91.106"	18" RCP B WALL	23"	Hole 26	26"	27.476"	0"	0"
Invert 4										
Invert 5										
Invert 6										
Invert 7										
Invert 8										

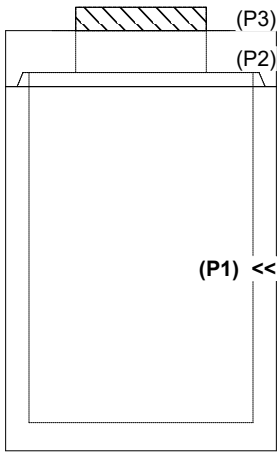

RIGHT-SIDE UP VIEW (int. dimensions)

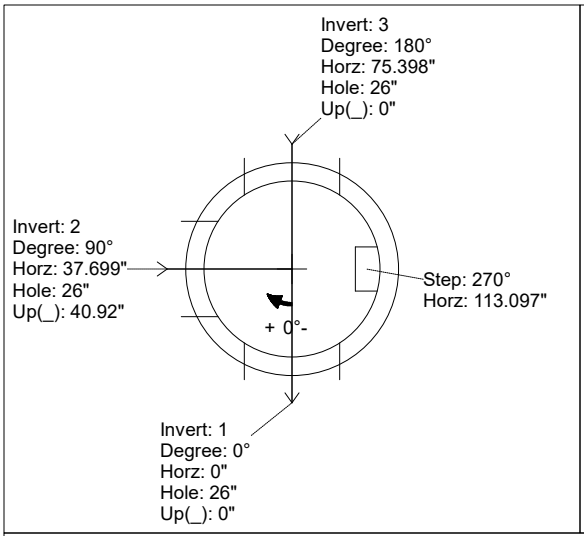

UPSIDE-DOWN VIEW (int. dimenions)

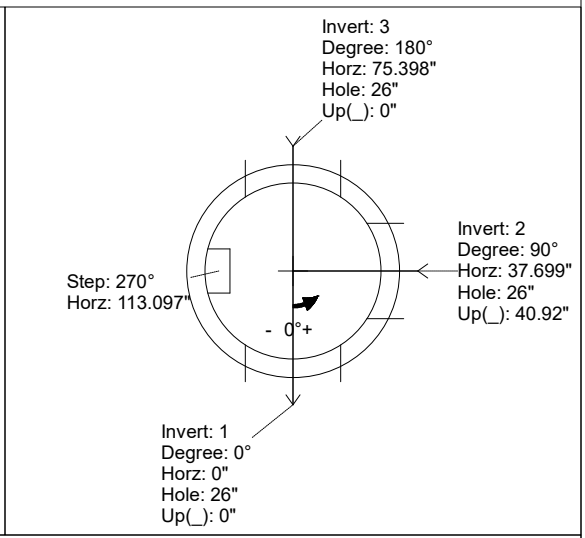

INSIDE WALL DIMENSIONS

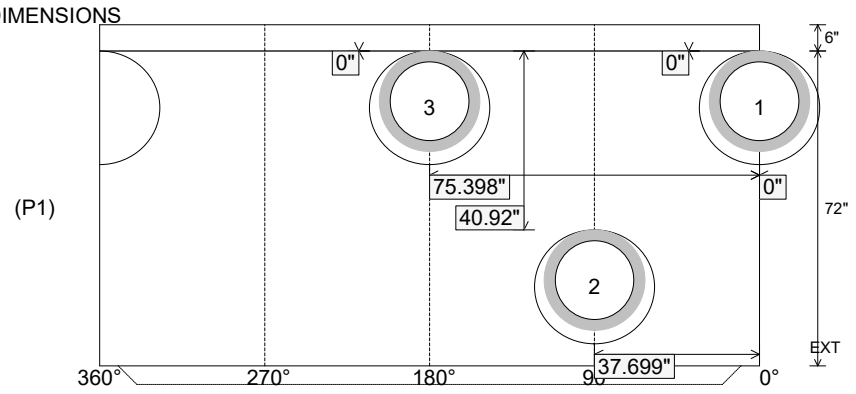

Coating (Int): Coating (Ext):	Seam Up: Tongue Seam Dn: n/a	Wall Thickness: 5" Floor Height: 6"	Height (Int): 72" Height (Ext): 78"	Weight (Net): 5660 lb Volume (Net): 1.45cu.yd

Job Name: 25-1401 Irwin Landing Ph. 1 Job Location: Murfreesboro, TN Contractor: Bear Construction LLC	Plant: Beaver Dam 6/9/2026 10:37:04 AM	Tech: S. Felletter PC: Erica Bradley	

Structure ID: R16

P1 MH048BA42 MH BASE T/n

P4) 28" x 28" - CASTING HEIGHT - 5"	0 lb
P3) 48" - MH FLAT TOP w/28"x28" Hole F/G - 12"	1368 lb
P2) 48" - MH RISER T/G - 48"	3120 lb
P1) 48" - MH BASE T/n - 42"	3798 lb
1) 48" - STORM INVERT CHANNEL - 1/4 HEIGHT	1075 lb
1) CASTING - JBS 3104-V SINGLE SET	250 lb
2) 48" - Conseal CS-102 1.00"	0 lb
1) 28" x 28" - Conseal CS-102 1.00"	0 lb
3) Hole - 26	0 lb
7) MH Step ML-10-TDS-NCR - 10"	0 lb
Structure Total:	9611 lb

Structure Notes: .
1. PER ASTM C478 SPECIFICATIONS.
2. CONCRETE = 4,000 PSI AT 28 DAYS.
3. CASTING BY ICAST (JBS-3104 SINGLE SET).
.
REINFORCING PER ASTM A615 (GRADE 60).
- TOP SLAB (As .62) #5 BARS AT 6" C.C.E.W..
- RISER/WALLS (As .12)
- FLOOR (As .31) #5 BARS AT 12" C.C.E.W.

Rim: 579.25' Rim to Invert: 8.88' Slack: 2.06" Sump: 2.5" Step Position: 270°

Position	Elev	Angle	Ext. (cw)	Pipe	Pipe OD	Connector	Hole	Horz Size	Up (_)	Offset
Invert 1	570.37'	0°	0"	18" RCP B WALL	23"	Hole 26	26"	27.476"	0"	0"
Invert 2										
Invert 3	570.37'	180°	91.106"	18" RCP B WALL	23"	Hole 26	26"	27.476"	0"	0"
Invert 4										
Invert 5										
Invert 6										
Invert 7										
Invert 8										

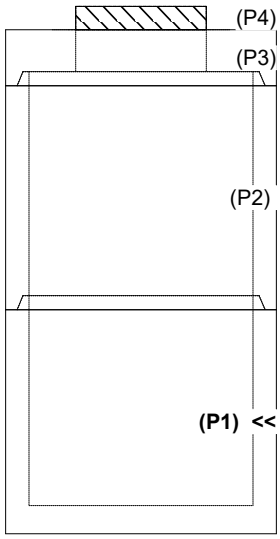

RIGHT-SIDE UP VIEW (int. dimensions)

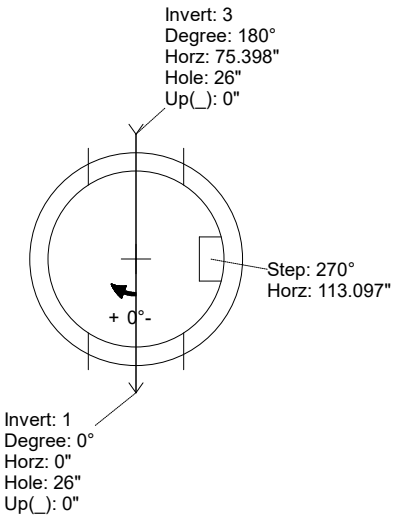

UPSIDE-DOWN VIEW (int. dimenions)

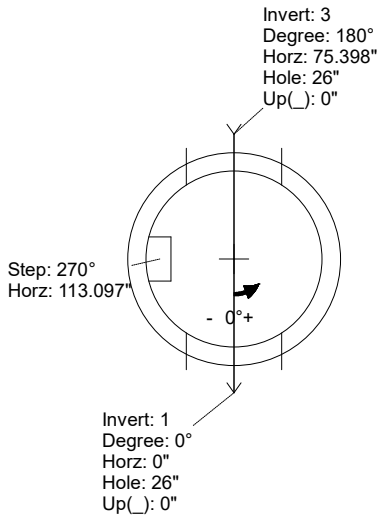

INSIDE WALL DIMENSIONS

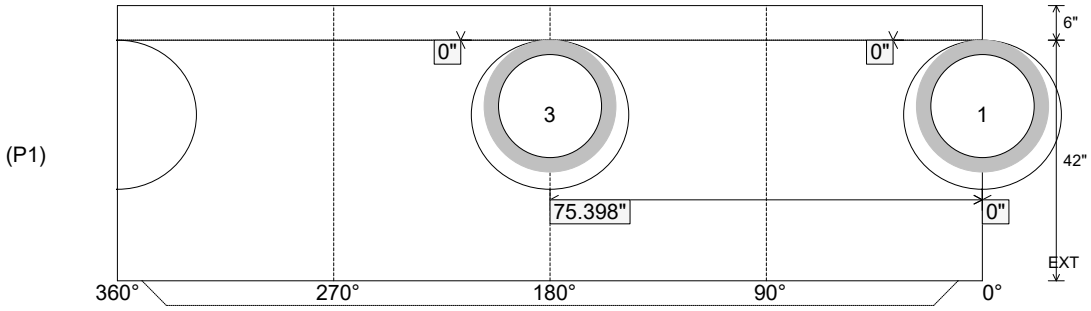

Coating (Int): Coating (Ext):	Seam Up: Tongue Seam Dn: n/a	Wall Thickness: 5" Floor Height: 6"	Height (Int): 42" Height (Ext): 48"	Weight (Net): 3798 lb Volume (Net): 0.97cu.yd

Job Name: 25-1401 Irwin Landing Ph. 1 Job Location: Murfreesboro, TN Contractor: Bear Construction LLC	Plant: Beaver Dam 6/9/2026 10:37:04 AM	Tech: S. Felletter PC: Erica Bradley	

Structure ID: R16

P1 MH048BA42 MH BASE T/n

P4) 28" x 28" - CASTING HEIGHT - 5"	0 lb
P3) 48" - MH FLAT TOP w/28"x28" Hole F/G - 12"	1368 lb
P2) 48" - MH RISER T/G - 48"	3120 lb
P1) 48" - MH BASE T/n - 42"	3798 lb
1) 48" - STORM INVERT CHANNEL - 1/4 HEIGHT	1075 lb
1) CASTING - JBS 3104-V SINGLE SET	250 lb
2) 48" - Conseal CS-102 1.00"	0 lb
1) 28" x 28" - Conseal CS-102 1.00"	0 lb
3) Hole - 26	0 lb
7) MH Step ML-10-TDS-NCR - 10"	0 lb
Structure Total:	9611 lb

Structure Notes: .
1. PER ASTM C478 SPECIFICATIONS.
2. CONCRETE = 4,000 PSI AT 28 DAYS.
3. CASTING BY ICAST (JBS-3104 SINGLE SET).
.
REINFORCING PER ASTM A615 (GRADE 60).
- TOP SLAB (As .62) #5 BARS AT 6" C.C.E.W..
- RISER/WALLS (As .12)
- FLOOR (As .31) #5 BARS AT 12" C.C.E.W.

Invert channel drawing
1/4 Height storm invert

Rim: 579.25' Rim to Invert: 8.88' Slack: 2.06" Sump: 2.5" Step Position: 270°

Position	Elev	Angle	Ext. (cw)	Pipe	Pipe OD	Connector	Hole	Horz Size	Up (_)	Offset
Invert 1	570.37'	0°	0"	18" RCP B WALL	23"	Hole 26	26"	27.476"	0"	0"
Invert 2										
Invert 3	570.37'	180°	91.106"	18" RCP B WALL	23"	Hole 26	26"	27.476"	0"	0"
Invert 4										
Invert 5										
Invert 6										
Invert 7										
Invert 8										

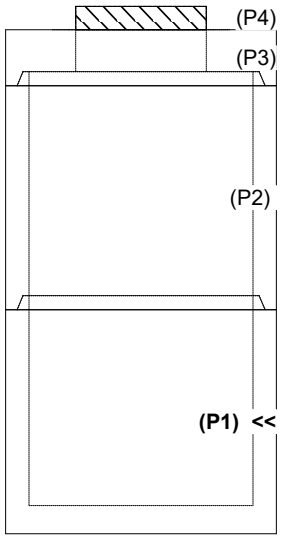

RIGHT-SIDE UP VIEW (int. dimensions)

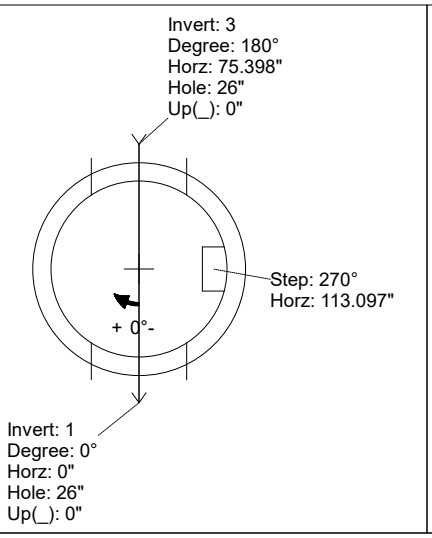

UPSIDE-DOWN VIEW (int. dimenions)

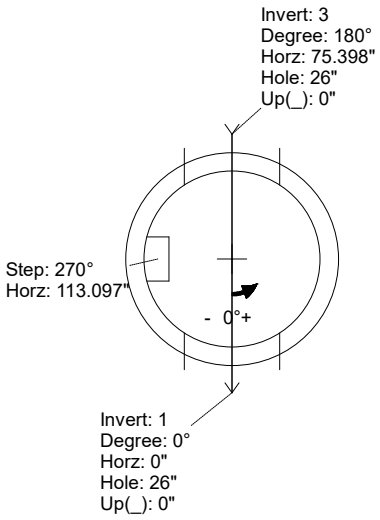

INSIDE WALL DIMENSIONS

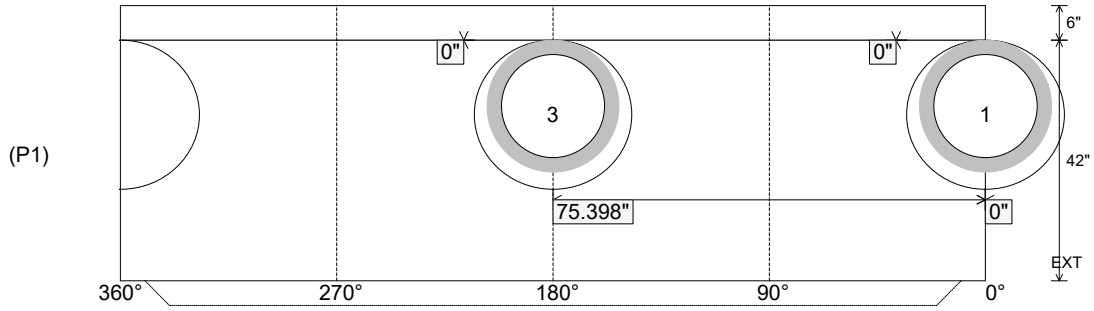

Coating (Int): Coating (Ext):	Seam Up: Tongue Seam Dn: n/a	Wall Thickness: 5" Floor Height: 6"	Height (Int): 42" Height (Ext): 48"	Weight (Net): 3798 lb Volume (Net): 0.97cu.yd

Job Name: 25-2952 - KYTC Jefferson Co Call 106 (251315) Job Location: Indiana, KY Contractor: Louisville Paving and Construction	Plant: 100 6/12/2026 3:10:07 PM	Tech: J. Horsley - A PC: J. Jarvis	

Structure ID: 50

P1 MH048BAVF **MH BASE Custom Ht T/n**

P3) 24" - CASTING HEIGHT - 4"	0 lb
P2) 48" - MH FLAT LID w/24in ECC Hole F/G - 12"	1561 lb
P1) 48" - MH BASE Custom Ht T/n - 38"	3605 lb
1) 48" - Conseal CS-102 1.00"	0 lb
1) 24" - Conseal CS-102 1.00"	0 lb
2) Hole - 20	0 lb
1) Hole - 18	0 lb
3) MH Step ML-10-TDS-NCR - 10"	0 lb
Structure Total:	5166 lb

Structure Notes:

** KYTC STATE PROJECT **

1. PER KYTC MANHOLE TYPE A / ASTM C-478 SPECS
2. CONCRETE: 4,000 PSI AT 28 DAYS
3. REINFORCEMENT: PER ASTM A615
4. NO STORM INVERT
5. STEPS AT 270 DEGREES
6. HOE KY-206 FRAME & COVER "STORM" SUPPLIED BY OTHERS

Rim: 551.73' Rim to Invert: 4.25' Slack: 0" Sump: 3" Step Position: 270°

Position	Elev	Angle	Ext. (cw)	Pipe	Pipe OD	Connector	Hole	Horz Size	Up (_)	Offset
Invert 1	547.48'	0°	0"	15" HDPE	17.6"	Hole 20	20"	20.629"	0.5"	0"
Invert 2	547.48'	70°	35.375"	12" HDPE	14.5"	Hole 18	18"	18.451"	0"	0"
Invert 3	547.48'	160°	81"	15" HDPE	17.6"	Hole 20	20"	20.629"	0.5"	0"
Invert 4										
Invert 5										
Invert 6										
Invert 7										
Invert 8										

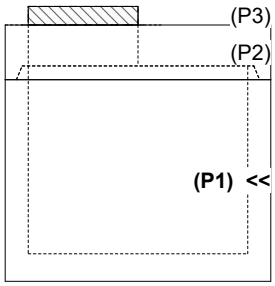

RIGHT-SIDE UP VIEW (int. dimensions)

UPSIDE-DOWN VIEW (int. dimenions)

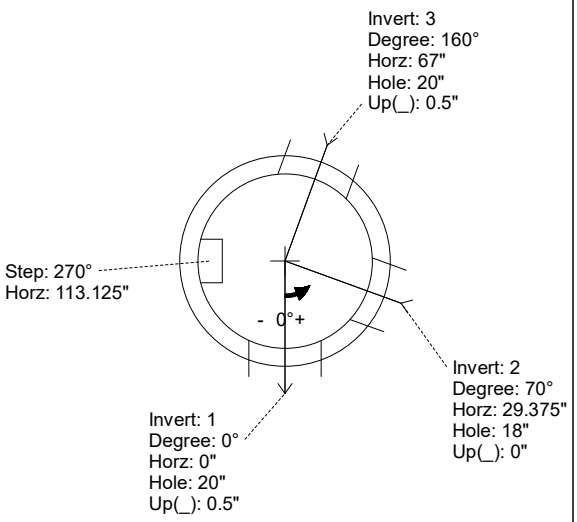

INSIDE WALL DIMENSIONS

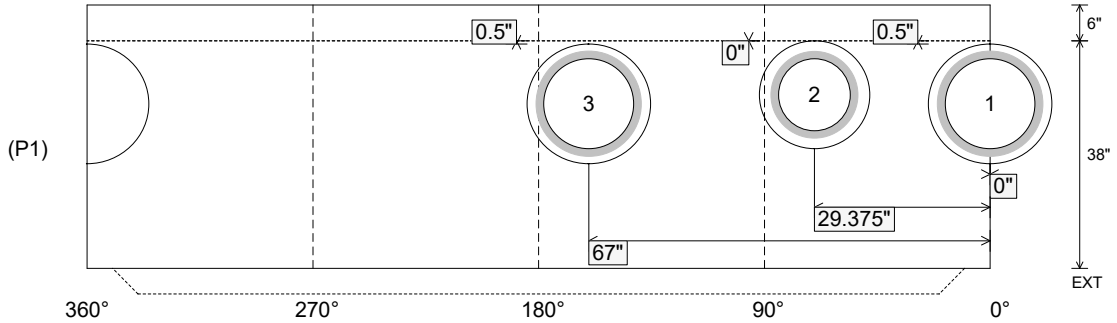

Coating (Int): Coating (Ext):	Seam Up: Tongue Seam Dn: n/a	Wall Thickness: 5" Floor Height: 6"	Height (Int): 38" Height (Ext): 44"	Weight (Net): 3605 lb Volume (Net): 0.92cu.yd

Job Name: 25-2952 - KYTC Jefferson Co Call 106 (251315) Job Location: Indiana, KY Contractor: Louisville Paving and Construction	Plant: 100 6/12/2026 3:10:05 PM	Tech: J. Horsley - A PC: J. Jarvis	

Structure ID: 48

P1 MH048BAVF **MH BASE Custom Ht T/n**

P3) 24" - CASTING HEIGHT - 4"	0 lb
P2) 48" - MH FLAT LID w/24in ECC Hole F/G - 12"	1561 lb
P1) 48" - MH BASE Custom Ht T/n - 38"	3605 lb
1) 48" - Conseal CS-102 1.00"	0 lb
1) 24" - Conseal CS-102 1.00"	0 lb
2) Hole - 20	0 lb
1) Hole - 18	0 lb
3) MH Step ML-10-TDS-NCR - 10"	0 lb
Structure Total:	5166 lb

Structure Notes:

** KYTC STATE PROJECT **

1. PER KYTC MANHOLE TYPE A / ASTM C-478 SPECS
2. CONCRETE: 4,000 PSI AT 28 DAYS
3. REINFORCEMENT: PER ASTM A615
4. NO STORM INVERT
5. STEPS AT 270 DEGREES
6. HOE KY-206 FRAME & COVER "STORM" SUPPLIED BY OTHERS

Rim: 552.23' Rim to Invert: 4.25' Slack: 0" Sump: 3" Step Position: 270°

Position	Elev	Angle	Ext. (cw)	Pipe	Pipe OD	Connector	Hole	Horz Size	Up (_)	Offset
Invert 1	547.98'	0°	0"	15" HDPE	17.6"	Hole 20	20"	20.629"	0.5"	0"
Invert 2	547.98'	90°	45.5"	12" HDPE	14.5"	Hole 18	18"	18.451"	0"	0"
Invert 3	547.98'	180°	91.125"	15" HDPE	17.6"	Hole 20	20"	20.629"	0.5"	0"
Invert 4										
Invert 5										
Invert 6										
Invert 7										
Invert 8										

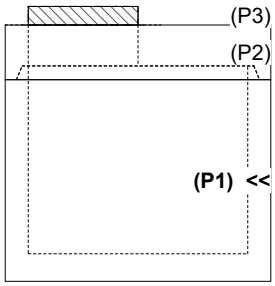

RIGHT-SIDE UP VIEW (int. dimensions)

UPSIDE-DOWN VIEW (int. dimenions)

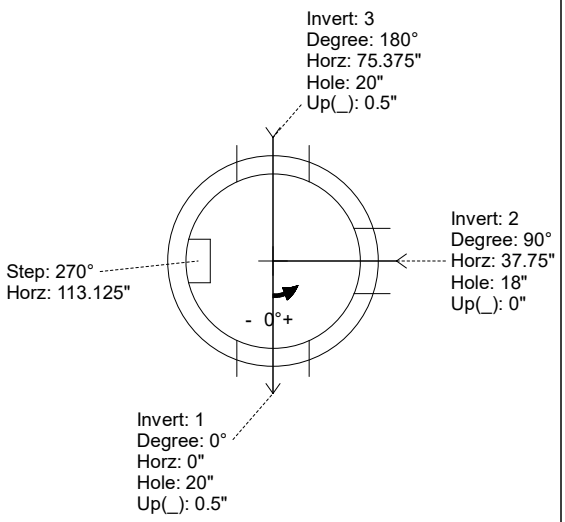

INSIDE WALL DIMENSIONS

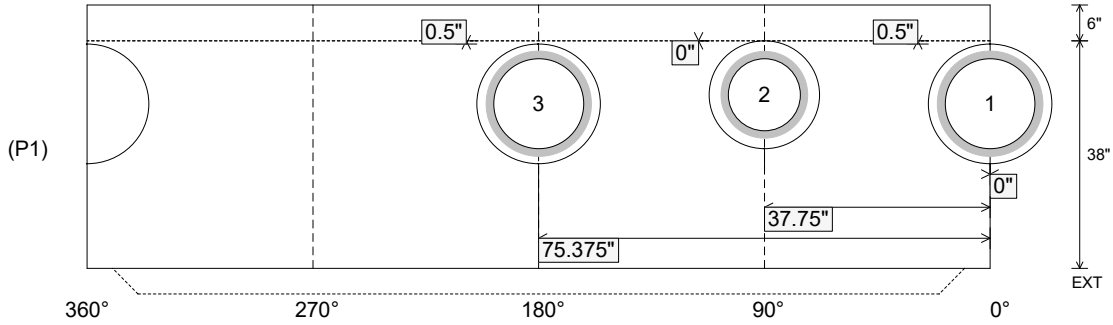

Coating (Int): Coating (Ext):	Seam Up: Tongue Seam Dn: n/a	Wall Thickness: 5" Floor Height: 6"	Height (Int): 38" Height (Ext): 44"	Weight (Net): 3605 lb Volume (Net): 0.92cu.yd

Job Name: 25-3535 - LFCU Boonville Job Location: Boonville, IN 47601 Contractor: Hahn Excavating, Inc.	Plant: 100 6/24/2026 12:45:43 PM	Tech: J. Horsley - A PC: E. Bradley	

Structure ID: MH104

P1 MH060BAVF **MH BASE Custom Ht F/n**

P3) 24" - CASTING HEIGHT - 7"	0 lb
P2) 60" - MH FLAT TOP w/ 24" ECC Hole F/F - 8"	2429 lb
P1) 60" - MH BASE Custom Ht F/n - 47"	5885 lb
1) CASTING - HOE MC-315 F/C Storm	258 lb
1) 60" - Conseal CS-102 1.00"	0 lb
1) 24" - Conseal CS-102 1.00"	0 lb
2) Hole - 44	0 lb
1) Hole - 12	0 lb
1) Hole - 6	0 lb
4) MH Step ML-10-TDS-NCR - 10"	0 lb
Structure Total:	8573 lb

Structure Notes:
1. PER ASTM C-478 SPECIFICATIONS
2. CONCRETE: 4,000 PSI AT 28 DAYS
3. REINFORCEMENT: PER ASTM A615
4. STORM INVERT BY OTHERS
5. STEPS AT 75.5 DEGREES
6. HOE MC-315 FRAME & COVER "STORM" SUPPLIED BY ICAST

Rim: 420.45' Rim to Invert: 4.95' Slack: 0.25" Sump: 2.85" Step Position: 75.5°

Position	Elev	Angle	Ext. (cw)	Pipe	Pipe OD	Connector	Hole	Horz Size	Up (_)	Offset
Invert 1	415.5'	0°	0"	36" HDPE	41.7"	Hole 44	44"	49.393"	0"	0"
Invert 2	415.5'	151°	94.875"	36" HDPE	41.7"	Hole 44	44"	49.393"	0"	0"
Invert 3	417.73'	241°	151.375"	8" HDPE	9.1"	Hole 12	12"	12.081"	29.125"	0"
Invert 4	418.25'	290°	182.25"	3" PVC SDR35	3.25"	Hole 6	6"	6.01"	35.75"	0"
Invert 5										
Invert 6										
Invert 7										
Invert 8										

RIGHT-SIDE UP VIEW (int. dimensions)

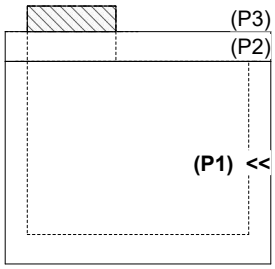

UPSIDE-DOWN VIEW (int. dimenions)

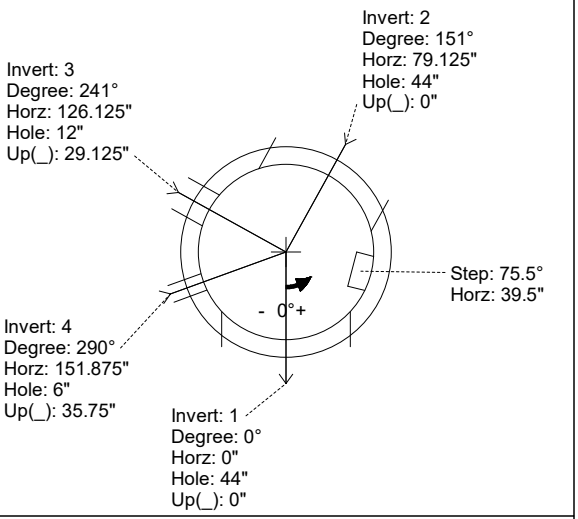

INSIDE WALL DIMENSIONS

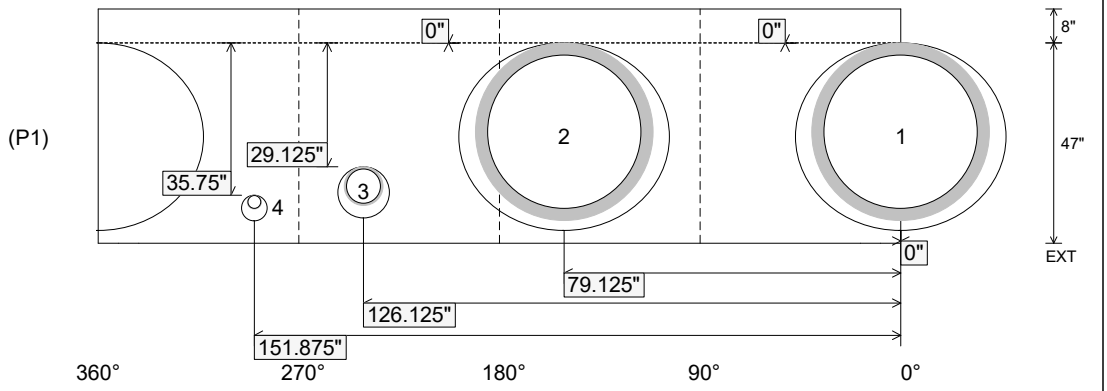

Coating (Int): Coating (Ext):	Seam Up: Flat Seam Dn: n/a	Wall Thickness: 6" Floor Height: 8"	Height (Int): 47" Height (Ext): 55"	Weight (Net): 5885 lb Volume (Net): 1.5cu.yd

Job Name: 26-2800 901652 13635 Telegraph Road Job Location: CPU Contractor: Contech Engineering Solutions	Plant: Beaver Dam 6/24/2026 10:19:45 AM	Tech: S. Felletter PC: C. Goff	

Structure ID: 10-CS-5

P3 MH060LD13SP MH FLAT TOP SPEC. (30" CASTING CAST IN) F/G

P4) 30" - CASTING HEIGHT - 0"	0 lb
P3) 60" - MH FLAT TOP SPEC. (30" CASTING CAST IN) F/G - 13"	2589 lb
P2) 60" - MH RISER Custom Ht T/G - 63"	6372 lb
P1) 60" - MH BASE Custom Ht T/n - 18"	4612 lb
1) ASSEMBLY REQUIRED	0 lb
1) CVSTENCILING	0 lb
2) 60" - Conseal CS-102 1.00"	0 lb
2) Hole - 16	0 lb
Structure Total:	13573 lb

Structure Notes: .
4" CASTING BY OTHERS
.
LIFTING ANCHORS TO BE INSTALLED ON THE OUTSIDE OF THE STRUCTURE
.
ICAST TO INSTALL THE INTERNALS
.
CONTECH'S LOGO AS WELL AS THE INLET AND OUTLET MUST BE STENCILED ONTO THE STRUCTURE

GENERAL NOTES:

1. MANUFACTURED TO ASTM C-478 (LATEST REVISION).
2. CONCRETE 5,000 PSI AT 28 DAYS.
3. REINFORCING: #5 @ 6" C.C. E.W. PER ASTM A615 (GRADE 60)

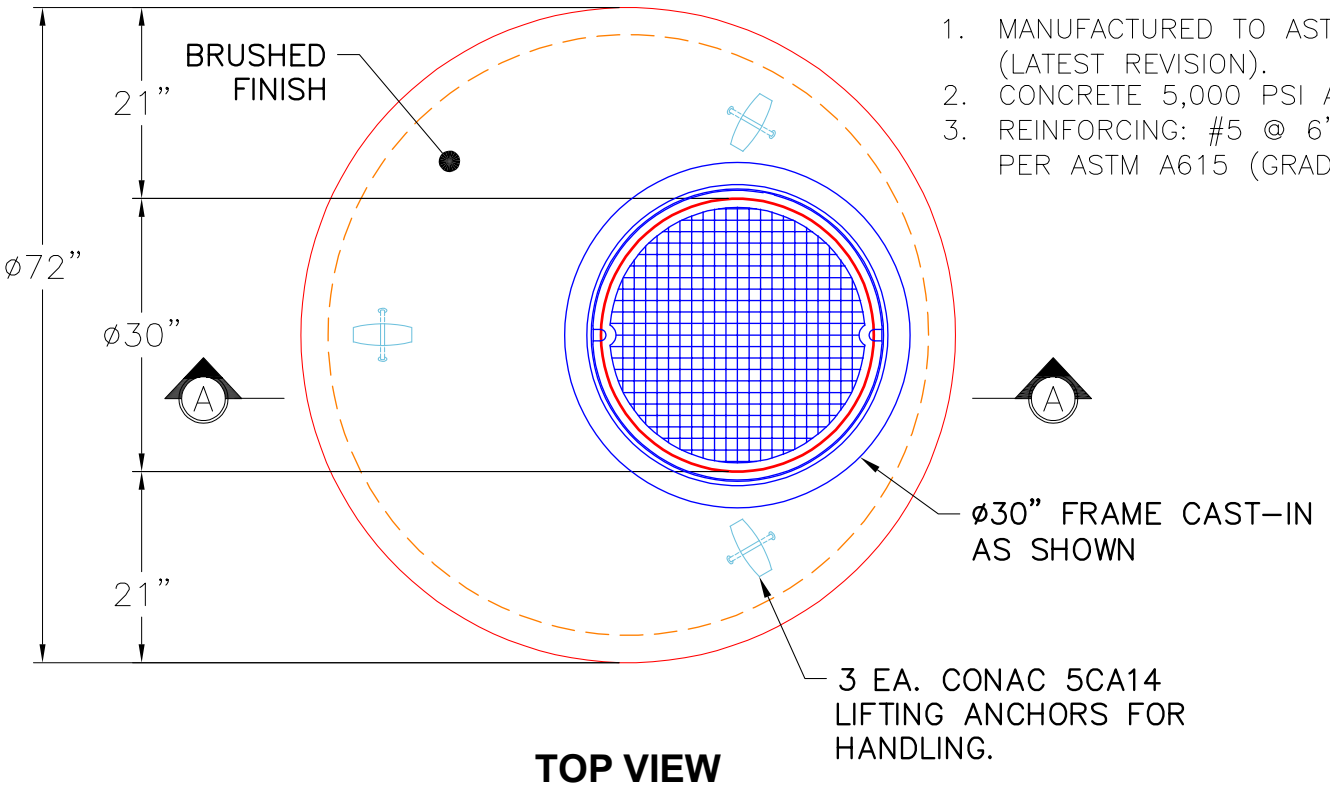

TOP VIEW

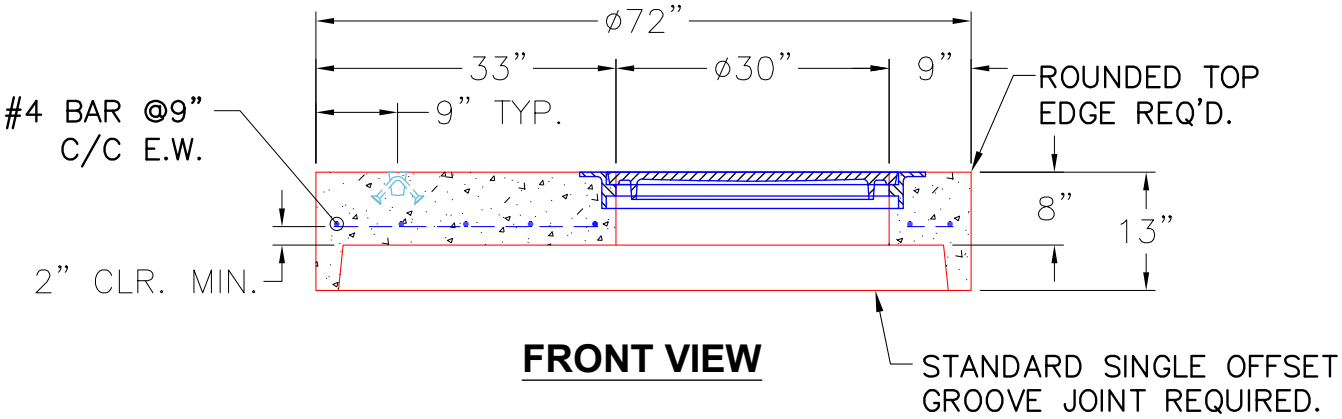

FRONT VIEW

Coating (Int): Coating (Ext):	Seam Up: Flat Seam Dn: Groove	Wall Thickness: 6"	Height (Ext): 13"	Weight (Net): 2589 lb Volume (Net): 0.66cu.yd

Job Name: 25-3062 Portland Bypass Job Location: Portland, TN Contractor: Scotty's Contracting & Stone, LLC	Plant: Beaver Dam 6/1/2026 8:24:17 AM	Tech: J. Coppage PC: C. Goff	

Structure ID: CB-33

P3 MH060LD10SP **MH FLAT TOP - TDOT NO 12 (28"x34" Hole)**

P4) 28" x 34" - CASTING HEIGHT - 7"	0 lb
P3) 60" - MH FLAT TOP - TDOT NO 12 (28"x34" Hole) - 10"	3417 lb
P2) 60" - MH RISER NO STEPS - 36"	3744 lb
P1) 60" - MH BASE Custom Ht - 70"	8677 lb
1) CASTING - JBS-3123 MODIFIED SET	250 lb
2) 60" - Conseal CS-102 1.00"	0 lb
1) 28" x 34" - Conseal CS-102 1.00"	0 lb
2) Hole - 40	0 lb
1) Hole - 6	0 lb
Structure Total:	16088 lb

Structure Notes:
1. PER TDOT D-CB-12RB / ASTM C478 SPEC'S.
2. CONCRETE = 4,000 PSI AT 28 DAYS.
3. JBS 3123 MOD SINGLE SET BY ICAST
4. REINFORCING PER ASTM A615 (GRADE 60).

** PER TDOT STD DRAWING D-CB-12RB **
- TOP SLAB - DBL MAT #5 BARS.
- RISER (As .18)
- FLOOR (As .62) #5 BARS AT 6" C.C.E.W.

NOTES:
1. MANUFACTURED TO ASTM C-478 (LATEST REVISION).
2. CONCRETE: 4,000 PSI AT 28 DAYS.
3. REINFORCING: PER TDOT DRAWING D-CB-12RA OR D-RL-1 FOR WWM OPTION.

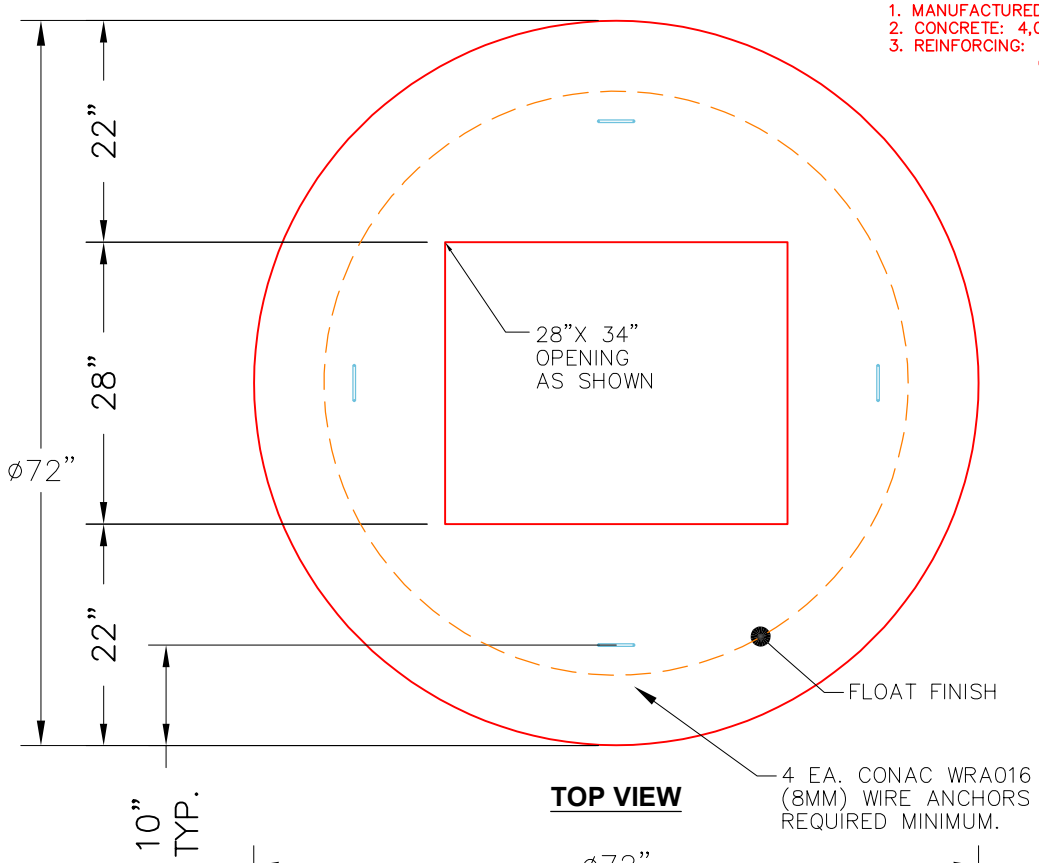

TOP VIEW

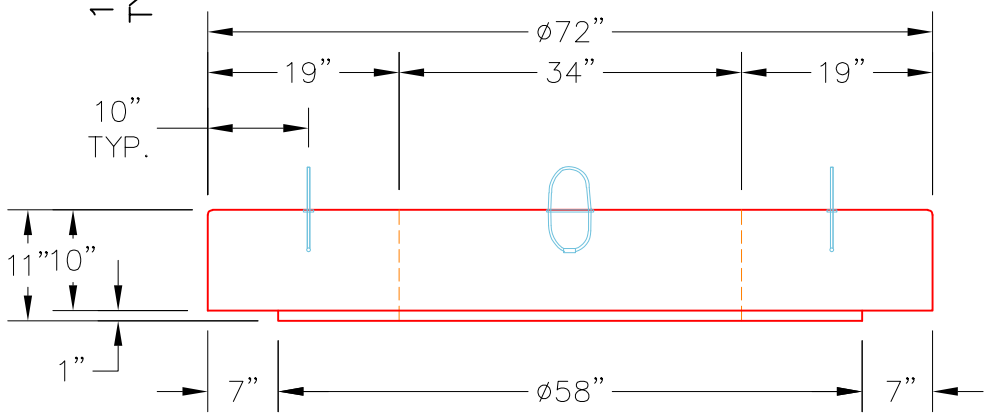

FRONT VIEW

Coating (Int): Coating (Ext):	Seam Up: Flat Seam Dn: Flat	Wall Thickness: 6"	Height (Ext): 10"	Weight (Net): 3417 lb Volume (Net): 0.87cu.yd

Job Name: 25-3062 Portland Bypass Job Location: Portland, TN Contractor: Scotty's Contracting & Stone, LLC	Plant: Beaver Dam 6/1/2026 8:22:41 AM	Tech: J. Coppage PC: C. Goff	

Structure ID: CB-6

P1 MH060BAVF **MH BASE Custom Ht**

P3) 28" x 34" - CASTING HEIGHT - 7"	0 lb
P2) 60" - MH FLAT TOP - TDOT NO 12 (28"x34" Hole) - 10"	3417 lb
P1) 60" - MH BASE Custom Ht - 65"	8492 lb
1) CASTING - JBS-3123 MODIFIED SET	250 lb
1) 60" - Conseal CS-102 1.00"	0 lb
1) 28" x 34" - Conseal CS-102 1.00"	0 lb
2) Hole - 39	0 lb
1) Hole - 6	0 lb
Structure Total:	12159 lb

Structure Notes:
1. PER TDOT D-CB-12RB / ASTM C478 SPEC'S.
2. CONCRETE = 4,000 PSI AT 28 DAYS.
3. NO INVERT CHANNEL.
4. JBS 3123 MOD SINGLE SET BY ICAST
5. REINFORCING PER ASTM A615 (GRADE 60).

** PER TDOT STD DRAWING D-CB-12RB **
- TOP SLAB - DBL MAT #5 BARS.
- RISER (As .18)
- FLOOR (As .62) #5 BARS AT 6" C.C.E.W.

Rim: 795.25' Rim to Invert: 6.59' Slack: 0.58" Sump: 3.5" Step Position:

Position	Elev	Angle	Ext. (cw)	Pipe	Pipe OD	Connector	Hole	Horz Size	Up (_)	Offset
Invert 1	788.66'	0°	0"	30" RCP B WALL	37"	Hole 39	39"	42.455"	0"	0"
Invert 2	788.66'	180°	113.097"	30" RCP B WALL	37"	Hole 39	39"	42.455"	0"	0"
Invert 3	792.25'	180°	113.097"	4" HDPE (perf pipe)	4.8"	Hole 6	6"	6.01"	46.18"	0"
Invert 4										
Invert 5										
Invert 6										
Invert 7										
Invert 8										

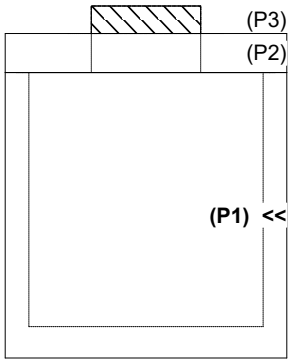

RIGHT-SIDE UP VIEW (int. dimensions)

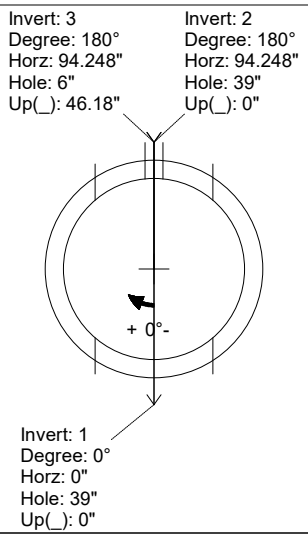

UPSIDE-DOWN VIEW (int. dimenions)

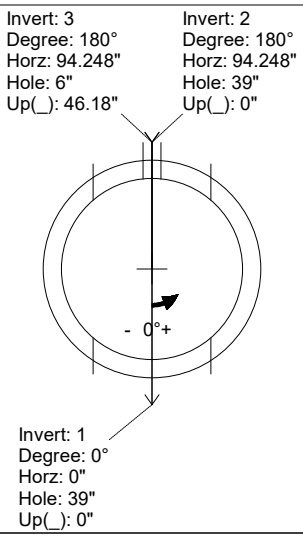

INSIDE WALL DIMENSIONS

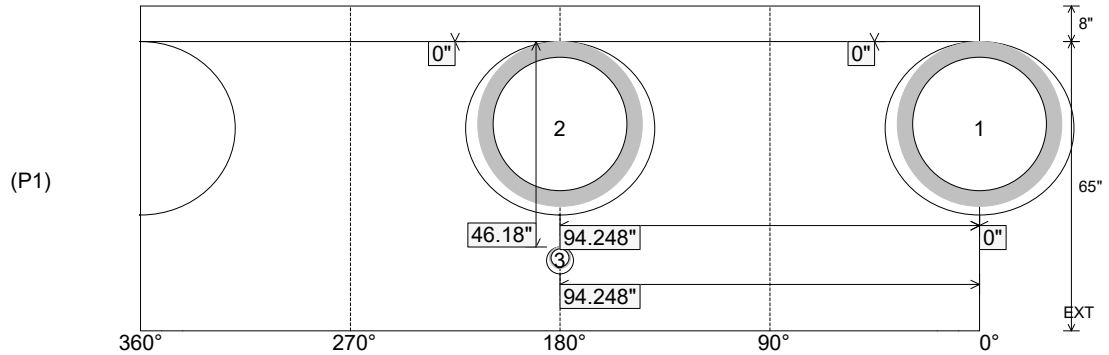

Coating (Int): Coating (Ext):	Seam Up: Flat Seam Dn: n/a	Wall Thickness: 6" Floor Height: 8"	Height (Int): 65" Height (Ext): 73"	Weight (Net): 8492 lb Volume (Net): 2.17cu.yd

Job Name: 24-3511 Coles Ferry Section 18 & 19 Job Location: Lebanon, TN Contractor: Covenant Constructors, LLC	Plant: Beaver Dam, KY 6/18/2026 10:58:16 AM	Tech: J. Horsley PC: A. Chambers	

Structure ID: JB4

P1 MH060BAVF MH BASE Custom Ht F/n

P3) 24" - CASTING HEIGHT - 7"	0 lb
P2) 60" - MH FLAT TOP w/ 24" ECC Hole F/F - 8"	2429 lb
P1) 60" - MH BASE Custom Ht F/n - 36"	5598 lb
1) CASTING - JBS 1150 F/C STORM	250 lb
1) 60" - Conseal CS-102 1.00"	0 lb
1) 24" - Conseal CS-102 1.00" (Double)	0 lb
1) Hole - 32	0 lb
1) Hole - 26	0 lb
1) Hole - 22	0 lb
3) MH Step ML-10-TDS-NCR - 10"	0 lb
Structure Total:	8277 lb

Structure Notes: 1. PER ASTM C478 SPECIFICATIONS.
2. CONCRETE = 4,500 PSI AT 28 DAYS.
3. NO INVERT CHANNEL.
4. CASTING BY ICAST (JBS 1150 F/C)
.
REINFORCING PER ASTM A615 (GRADE 60).
- TOP SLAB H20 LOADING..
- RISER/WALLS (As .12)
- FLOOR (As .31) #5 BARS AT 12" C.C.E.W.

Rim: 572.66' Rim to Invert: 4.02' Slack: 0.24" Sump: 3" Step Position: 0°

Position	Elev	Angle	Ext. (cw)	Pipe	Pipe OD	Connector	Hole	Horz Size	Up (_)	Offset
Invert 1	568.64'	90°	56.5"	24" RCP B WALL	30"	Hole 32	32"	33.752"	0"	0"
Invert 2	568.64'	180°	113.125"	18" RCP B WALL	23"	Hole 26	26"	26.891"	0.5"	0"
Invert 3	568.64'	270°	169.625"	15" RCP B WALL	19.5"	Hole 22	22"	22.525"	0.75"	0"
Invert 4										
Invert 5										
Invert 6										
Invert 7										
Invert 8										

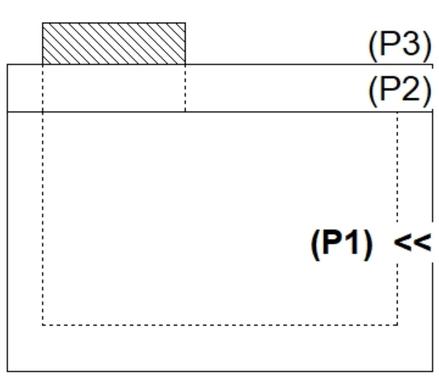

RIGHT-SIDE UP VIEW (int. dimensions)

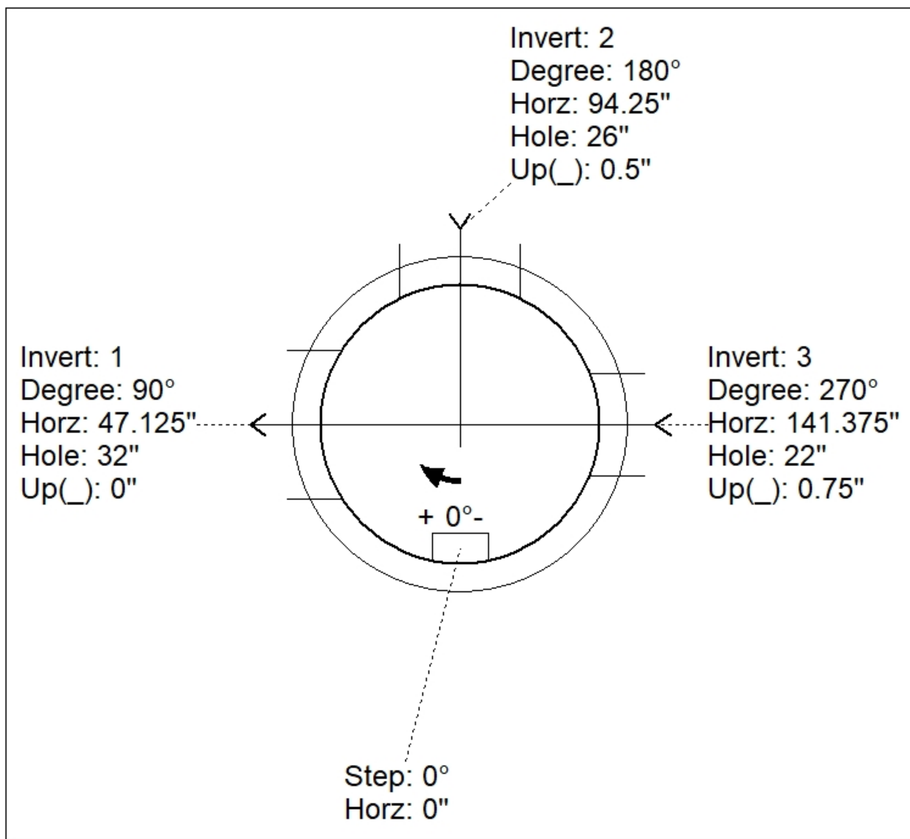

UPSIDE-DOWN VIEW (int. dimenions)

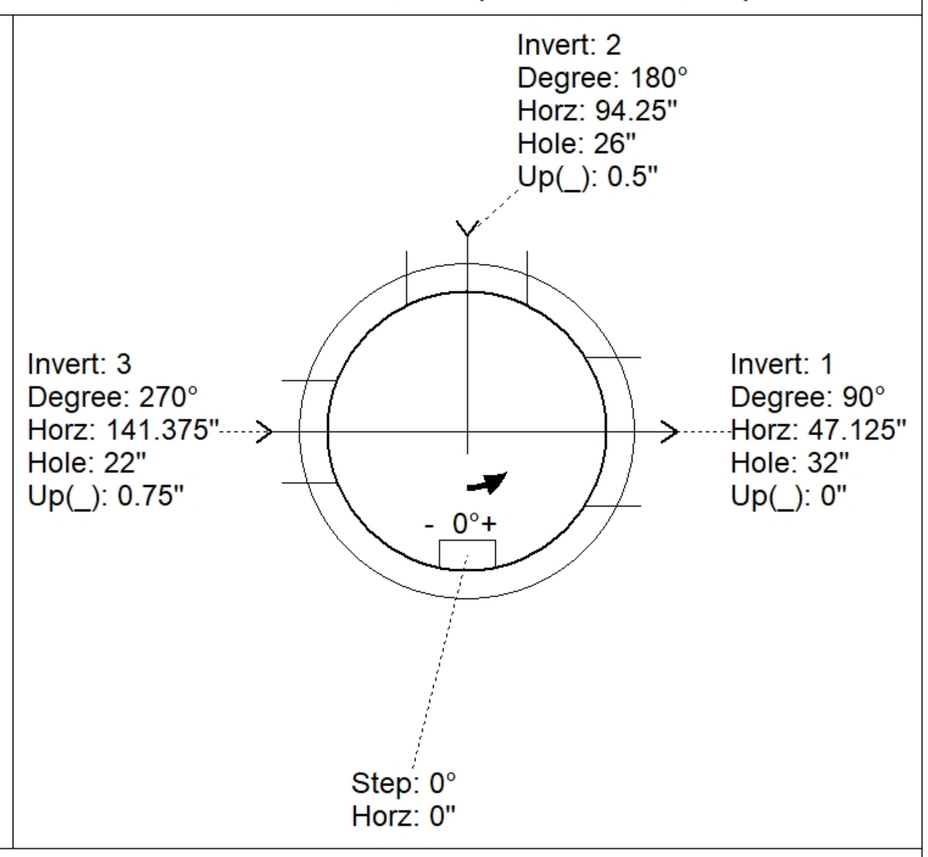

INSIDE WALL DIMENSIONS

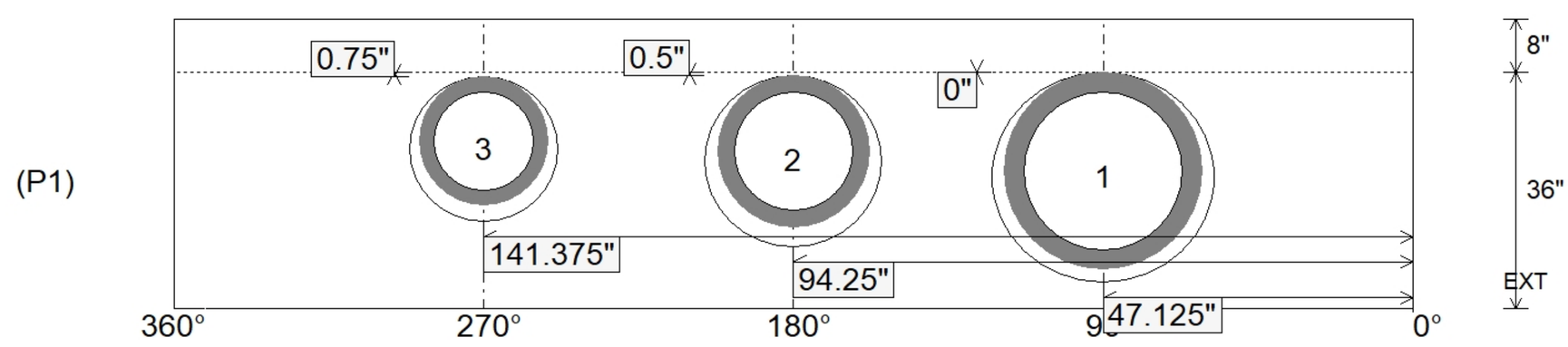

Coating (Int): Coating (Ext):	Seam Up: Flat Seam Dn: n/a	Wall Thickness: 6" Floor Height: 8"	Height (Int): 36" Height (Ext): 44"	Weight (Net): 5598 lb Volume (Net): 1.43cu.yd

Job Name: 25-3579 - Lebanon Rd Clarks Run Trunk Sewer Ph 2 Job Location: Danville, KY Contractor: Hubert Excavating & Contracting	Plant: 100 6/7/2026 1:24:51 PM	Tech: J. Horsley PC: C. Goff	

Structure ID: MH A15

P1 MH060BAEVF **MH BASE w/FLANGE (08F/07EF) w/Coating T/n**

P5)	24" - CASTING HEIGHT - 7"	0 lb
P4)	48" - ECC CONE w/ 24" HOLE, w/Coating F/G - 36"	2251 lb
P3)	48" - MH RISER w/COATING T/G - 24"	1677 lb
P2)	60" - MH Trans. Slab - 48" Hole ECC, w/Coating T/G - 13"	1928 lb
P1)	60" - MH BASE w/FLANGE (08F/07EF) w/Coating T/n - 68"	10066 lb
1)	60" - MH INVERT CHANNEL - FULL HEIGHT	2692 lb
1)	JOINT WRAP - 12" WD x 060" MAC WRAP	0 lb
1)	SPECIAL EXTERNAL COATING - Carboline 300M	0 lb
1)	SECONDARY POUR - Extended Flange	0 lb
2)	JOINT WRAP - 12" WD x 048" MAC WRAP	0 lb
1)	60" - Conseal CS-102 1.00" (Double)	0 lb
2)	48" - Conseal CS-102 1.00" (Double)	0 lb
1)	24" - Conseal CS-102 1.00" (Double)	0 lb
2)	A-Lok - 1040	2 lb
10)	MH Step ML-10-TDS-NCR - 10"	0 lb
238.97 SqFt)	Carboline Bitumastic 300M [EXT]	0 lb
	Structure Total:	18615 lb

Rim: 902.48' Rim to Invert: 12.225' Slack: 0.915" Sump: 2.215" Step Position: 92°

Structure Notes:
1. PER ASTM C-478 SPECIFICATIONS
2. CONCRETE: 4,000 PSI AT 28 DAYS
3. REINFORCEMENT:
   - WALLS: PER ASTM A615
   - FLOOR: #5 BAR @ 8" C.C. E.W. (GRADE 60) - 2" MIN. REBAR CLEARANCE (TYP)
4. INVERT CHANNEL REQUIRED
5. CARBOLINE 300M EXTERIOR COATING REQUIRED
6. STEPS AT 92 DEGREES
7. HOE MC-375 FRAME & COVER "SANITARY" SUPPLIED BY OTHERS

Position	Elev	Angle	Ext. (cw)	Pipe	Pipe OD	Connector	Hole	Horz Size	Up (_)	Offset
Invert 1	890.255'	0°	0"	30" PVC F679 (PS115)	32"	A-Lok 1040	33.5"	35.543"	0"	0"
Invert 2	890.305'	184°	115.625"	30" PVC F679 (PS115)	32"	A-Lok 1040	33.5"	35.543"	0.625"	0"
Invert 3										
Invert 4										
Invert 5										
Invert 6										
Invert 7										
Invert 8										

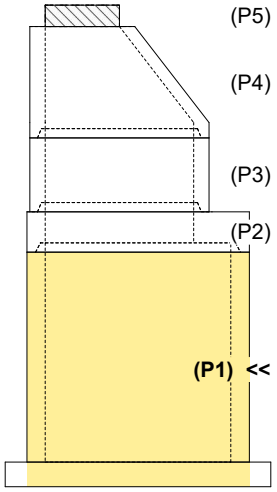

RIGHT-SIDE UP VIEW (int. dimensions)

FIRST POUR (BASE): 8,899 LBS

SECOND POUR (EXT. FLANGE): 1,167 LBS

UPSIDE-DOWN VIEW (int. dimenions)

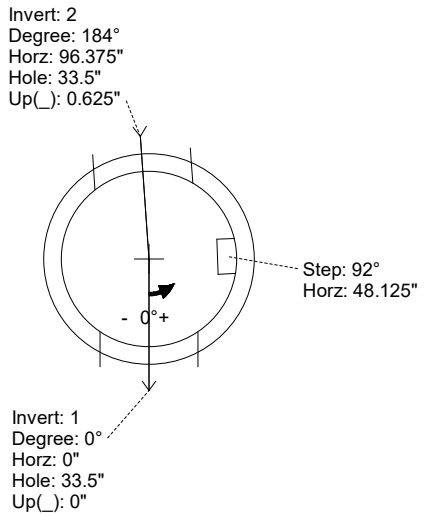

INSIDE WALL DIMENSIONS

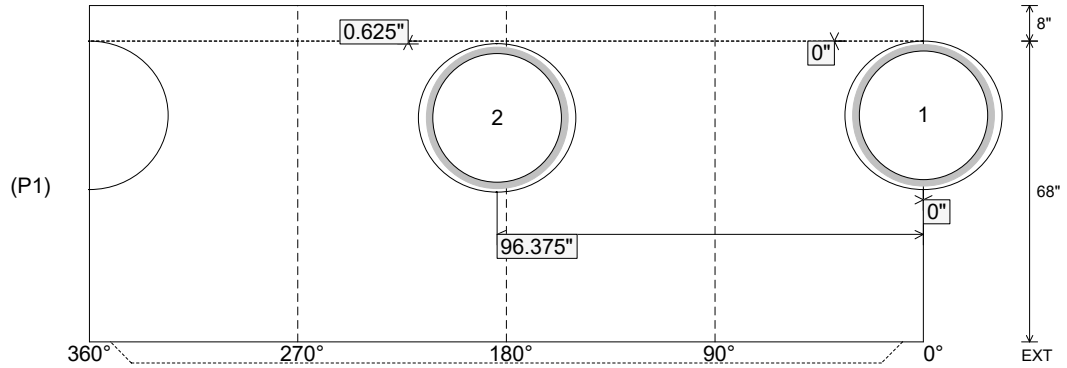

Coating (Int): Coating (Ext): Carboline Bitumastic 300M	Seam Up: Tongue Seam Dn: n/a	Wall Thickness: 6" Floor Height: 8"	Height (Int): 68" Height (Ext): 76"	Weight (Net): 10066 lb Volume (Net): 2.57cu.yd

Job Name: 25-3579 - Lebanon Rd Clarks Run Trunk Sewer Ph 2 Job Location: Danville, KY Contractor: Hubert Excavating & Contracting	Plant: 100 6/7/2026 1:24:51 PM	Tech: J. Horsley PC: C. Goff	

Structure ID: MH A15

P1 MH060BAEVF **MH BASE w/FLANGE (08F/07EF) w/Coating T/n**

P5)	24" - CASTING HEIGHT - 7"	0 lb
P4)	48" - ECC CONE w/ 24" HOLE, w/Coating F/G - 36"	2251 lb
P3)	48" - MH RISER w/COATING T/G - 24"	1677 lb
P2)	60" - MH Trans. Slab - 48" Hole ECC, w/Coating T/G - 13"	1928 lb
P1)	60" - MH BASE w/FLANGE (08F/07EF) w/Coating T/n - 68"	10066 lb
1)	60" - MH INVERT CHANNEL - FULL HEIGHT	2692 lb
1)	JOINT WRAP - 12" WD x 060" MAC WRAP	0 lb
1)	SPECIAL EXTERNAL COATING - Carboline 300M	0 lb
1)	SECONDARY POUR - Extended Flange	0 lb
2)	JOINT WRAP - 12" WD x 048" MAC WRAP	0 lb
1)	60" - Conseal CS-102 1.00" (Double)	0 lb
2)	48" - Conseal CS-102 1.00" (Double)	0 lb
1)	24" - Conseal CS-102 1.00" (Double)	0 lb
2)	A-Lok - 1040	2 lb
10)	MH Step ML-10-TDS-NCR - 10"	0 lb
238.97 SqFt)	Carboline Bitumastic 300M [EXT]	0 lb
	Structure Total:	18615 lb

Rim: 902.48' Rim to Invert: 12.225' Slack: 0.915" Sump: 2.215" Step Position: 92°

Structure Notes:
1. PER ASTM C-478 SPECIFICATIONS
2. CONCRETE: 4,000 PSI AT 28 DAYS
3. REINFORCEMENT: DRILL & DOWEL #5 BAR @ 8" C.C. E.W. (GRADE 60) FOR FLANGE POUR TIE-IN - 4" MIN. PENETRATION INTO BASE FLOOR & 2" MIN. REBAR CLEARANCE (TYP)
4. INVERT CHANNEL REQUIRED
5. CARBOLINE 300M EXTERIOR COATING REQUIRED
6. STEPS AT 92 DEGREES
7. HOE MC-375 FRAME & COVER "SANITARY" SUPPLIED BY OTHERS

Position	Elev	Angle	Ext. (cw)	Pipe	Pipe OD	Connector	Hole	Horz Size	Up (_)	Offset
Invert 1	890.255'	0°	0"	30" PVC F679 (PS115)	32"	A-Lok 1040	33.5"	35.543"	0"	0"
Invert 2	890.305'	184°	115.625"	30" PVC F679 (PS115)	32"	A-Lok 1040	33.5"	35.543"	0.625"	0"
Invert 3										
Invert 4										
Invert 5										
Invert 6										
Invert 7										
Invert 8										

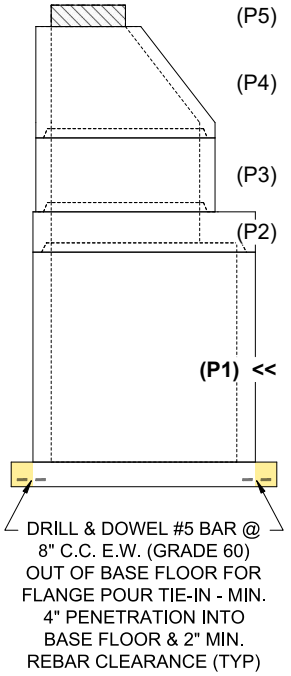

RIGHT-SIDE UP VIEW (int. dimensions)

FIRST POUR (BASE): 8,899 LBS

SECOND POUR (EXT. FLANGE): 1,167 LBS

UPSIDE-DOWN VIEW (int. dimenions)

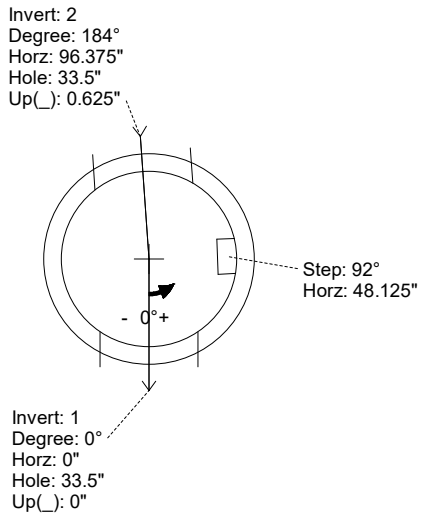

INSIDE WALL DIMENSIONS

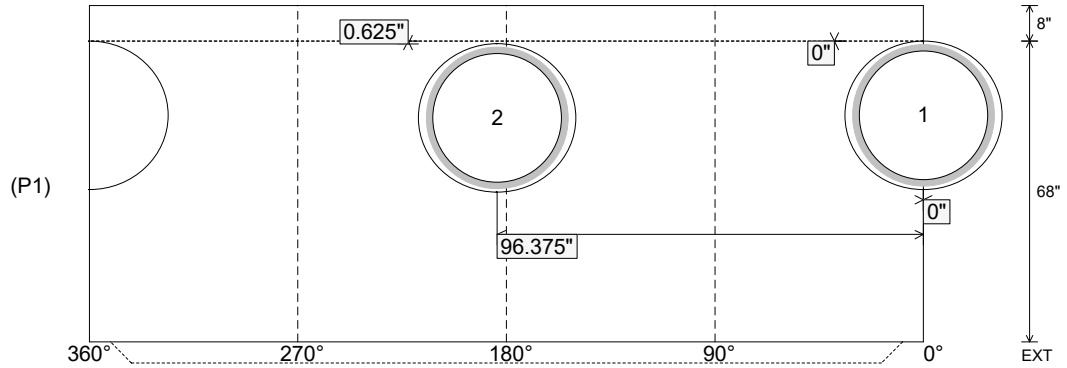

Coating (Int): Coating (Ext): Carboline Bitumastic 300M	Seam Up: Tongue Seam Dn: n/a	Wall Thickness: 6" Floor Height: 8"	Height (Int): 68" Height (Ext): 76"	Weight (Net): 10066 lb Volume (Net): 2.57cu.yd

Job Name: 25-3579 - Lebanon Rd Clarks Run Trunk Sewer Ph 2 Job Location: Danville, KY Contractor: Hubert Excavating & Contracting	Plant: 100 6/7/2026 1:24:51 PM	Tech: J. Horsley PC: C. Goff	

Structure ID: MH A15

P1 MH060BAEVF **MH BASE w/FLANGE (08F/07EF) w/Coating T/n**

P5)	24" - CASTING HEIGHT - 7"	0 lb
P4)	48" - ECC CONE w/ 24" HOLE, w/Coating F/G - 36"	2251 lb
P3)	48" - MH RISER w/COATING T/G - 24"	1677 lb
P2)	60" - MH Trans. Slab - 48" Hole ECC, w/Coating T/G - 13"	1928 lb
P1)	60" - MH BASE w/FLANGE (08F/07EF) w/Coating T/n - 68"	10066 lb
1)	60" - MH INVERT CHANNEL - FULL HEIGHT	2692 lb
1)	JOINT WRAP - 12" WD x 060" MAC WRAP	0 lb
1)	SPECIAL EXTERNAL COATING - Carboline 300M	0 lb
1)	SECONDARY POUR - Extended Flange	0 lb
2)	JOINT WRAP - 12" WD x 048" MAC WRAP	0 lb
1)	60" - Conseal CS-102 1.00" (Double)	0 lb
2)	48" - Conseal CS-102 1.00" (Double)	0 lb
1)	24" - Conseal CS-102 1.00" (Double)	0 lb
2)	A-Lok - 1040	2 lb
10)	MH Step ML-10-TDS-NCR - 10"	0 lb
238.97 SqFt)	Carboline Bitumastic 300M [EXT]	0 lb
	Structure Total:	18615 lb

Rim: 902.48' Rim to Invert: 12.225' Slack: 0.915" Sump: 2.215" Step Position: 92°

Structure Notes:
1. PER ASTM C-478 SPECIFICATIONS
2. CONCRETE: 4,000 PSI AT 28 DAYS
3. REINFORCEMENT:
   - WALLS: PER ASTM A615
   - FLOOR: #5 BAR @ 8" C.C. E.W. (GRADE 60) - 2" MIN. REBAR CLEARANCE (TYP)
4. INVERT CHANNEL REQUIRED
5. CARBOLINE 300M EXTERIOR COATING REQUIRED
6. STEPS AT 92 DEGREES
7. HOE MC-375 FRAME & COVER "SANITARY" SUPPLIED BY OTHERS

Position	Elev	Angle	Ext. (cw)	Pipe	Pipe OD	Connector	Hole	Horz Size	Up (_)	Offset
Invert 1	890.255'	0°	0"	30" PVC F679 (PS115)	32"	A-Lok 1040	33.5"	35.543"	0"	0"
Invert 2	890.305'	184°	115.625"	30" PVC F679 (PS115)	32"	A-Lok 1040	33.5"	35.543"	0.625"	0"
Invert 3										
Invert 4										
Invert 5										
Invert 6										
Invert 7										
Invert 8										

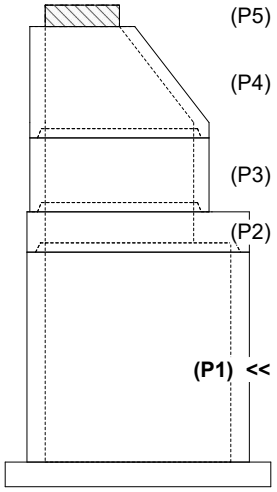

RIGHT-SIDE UP VIEW (int. dimensions)

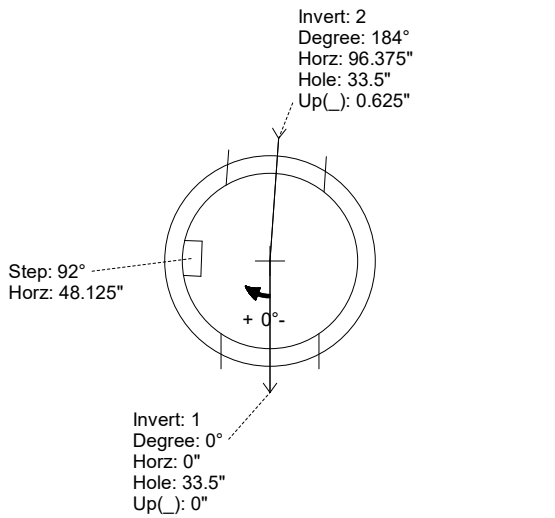

UPSIDE-DOWN VIEW (int. dimenions)

INVERT CHANNEL DRAWING

INSIDE WALL DIMENSIONS

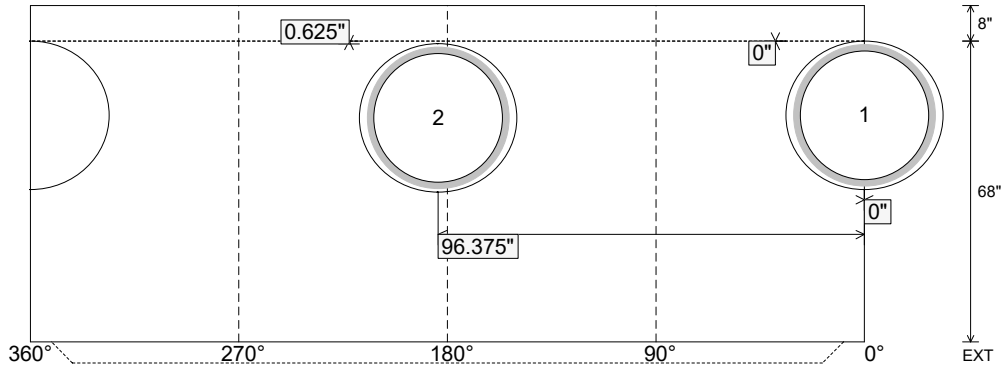

Coating (Int): Coating (Ext): Carboline Bitumastic 300M	Seam Up: Tongue Seam Dn: n/a	Wall Thickness: 6" Floor Height: 8"	Height (Int): 68" Height (Ext): 76"	Weight (Net): 10066 lb Volume (Net): 2.57cu.yd

Job Number:

25-3579

Job Name:

Lebanon Rd Clarks Run Trunk Sewer Ph 2

Structure:

MH A15

Note:

This Structure Is To Receive An External Coating of Carboline 300M (Supplied By iCast)

Job Name: 26-2799 892503 Regent Crt Condo Unit 5 Job Location: Dearborn, MI Contractor: Contech Engineering Solutions	Plant: Beaver Dam 6/25/2026 10:43:08 AM	Tech: S. Felletter PC: C. Goff	

Structure ID: 10-CS-6

P1 MH072BA24 MH BASE T/n

P5) 30" - CASTING HEIGHT - 4"	0 lb
P4) 72" - MH FLAT TOP SPEC. (30" ECC HOLE) F/G - 15"	4661 lb
P3) 72" - MH RISER T/G - 24"	3499 lb
P2) 72" - MH RISER T/G - 84"	11606 lb
P1) 72" - MH BASE T/n - 24"	7398 lb
1) ASSEMBLY REQUIRED	0 lb
1) CVSTENCILING	0 lb
3) 72" - Conseal CS-102 1.00"	0 lb
1) Hole - 24	0 lb
1) Hole - 28	0 lb
Structure Total:	27163 lb

Structure Notes: .
4" CASTING BY OTHERS
.
LIFTING ANCHORS TO BE INSTALLED ON THE OUTSIDE OF THE STRUCTURE
.
ICAST TO INSTALL THE INTERNALS
.
CONTECH'S LOGO AS WELL AS THE INLET AND OUTLET MUST BE STENCILED ONTO THE STRUCTURE

Rim: 602.5' Rim to Invert: 7.1' Slack: 3.236" Sump: 69.036" Step Position: 0°

Position	Elev	Angle	Ext. (cw)	Pipe	Pipe OD	Connector	Hole	Horz Size	Up (_)	Offset
Invert 1										
Invert 2										
Invert 3										
Invert 4										
Invert 5										
Invert 6										
Invert 7										
Invert 8										

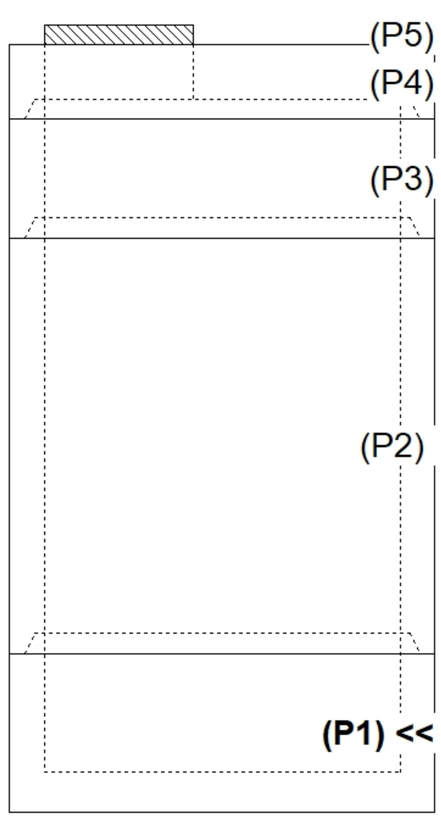

RIGHT-SIDE UP VIEW (int. dimensions)

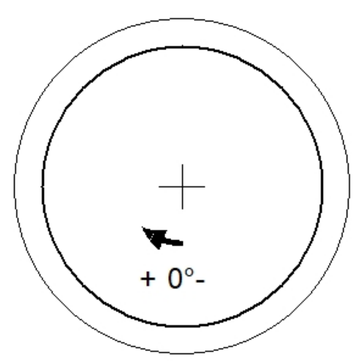

UPSIDE-DOWN VIEW (int. dimenions)

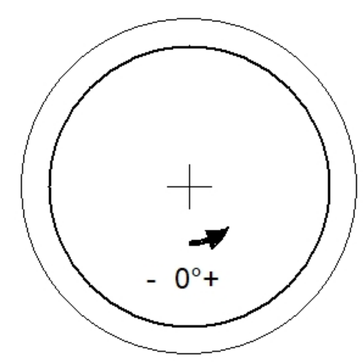

INSIDE WALL DIMENSIONS

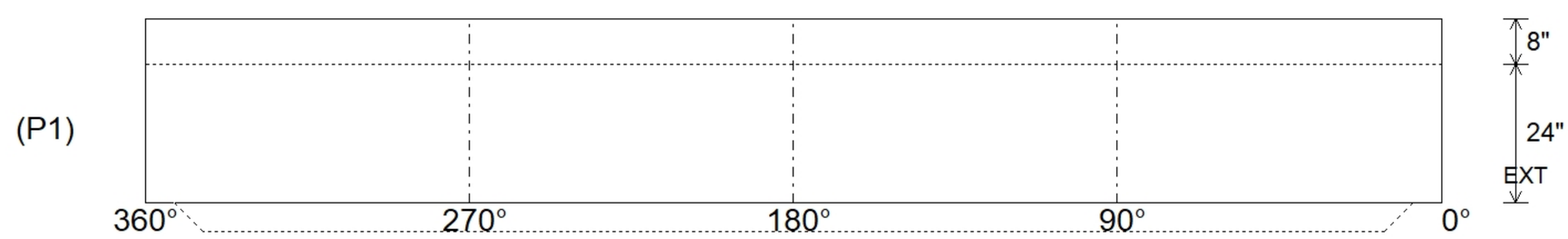

Coating (Int): Coating (Ext):	Seam Up: Tongue Seam Dn: n/a	Wall Thickness: 7" Floor Height: 8"	Height (Int): 24" Height (Ext): 32"	Weight (Net): 7398 lb Volume (Net): 1.89cu.yd

Job Name: 26-2799 892503 Regent Crt Condo Unit 5 Job Location: Dearborn, MI Contractor: Contech Engineering Solutions	Plant: Beaver Dam 6/25/2026 10:43:51 AM	Tech: S. Felletter PC: C. Goff	

Structure ID: 10-CS-6

P4 MH072LD15-30ECC MH FLAT TOP SPEC. (30" ECC HOLE) F/G

P5) 30" - CASTING HEIGHT - 4"	0 lb
P4) 72" - MH FLAT TOP SPEC. (30" ECC HOLE) F/G - 15"	4661 lb
P3) 72" - MH RISER T/G - 24"	3499 lb
P2) 72" - MH RISER T/G - 84"	11606 lb
P1) 72" - MH BASE T/n - 24"	7398 lb
1) ASSEMBLY REQUIRED	0 lb
1) CVSTENCILING	0 lb
3) 72" - Conseal CS-102 1.00"	0 lb
1) Hole - 24	0 lb
1) Hole - 28	0 lb
Structure Total:	27163 lb

Structure Notes: .
4" CASTING BY OTHERS
.
LIFTING ANCHORS TO BE INSTALLED ON THE OUTSIDE OF THE STRUCTURE
.
ICAST TO INSTALL THE INTERNALS
.
CONTECH'S LOGO AS WELL AS THE INLET AND OUTLET MUST BE STENCILED ONTO THE STRUCTURE

NOTES:
1. MANUFACTURED TO ASTM C-478 (LATEST REVISION).
2. CONCRETE: 4,000 PSI AT 28 DAYS.
3. REINFORCING: #5 BAR @ 6" C.C. E.W. (GRADE 60).

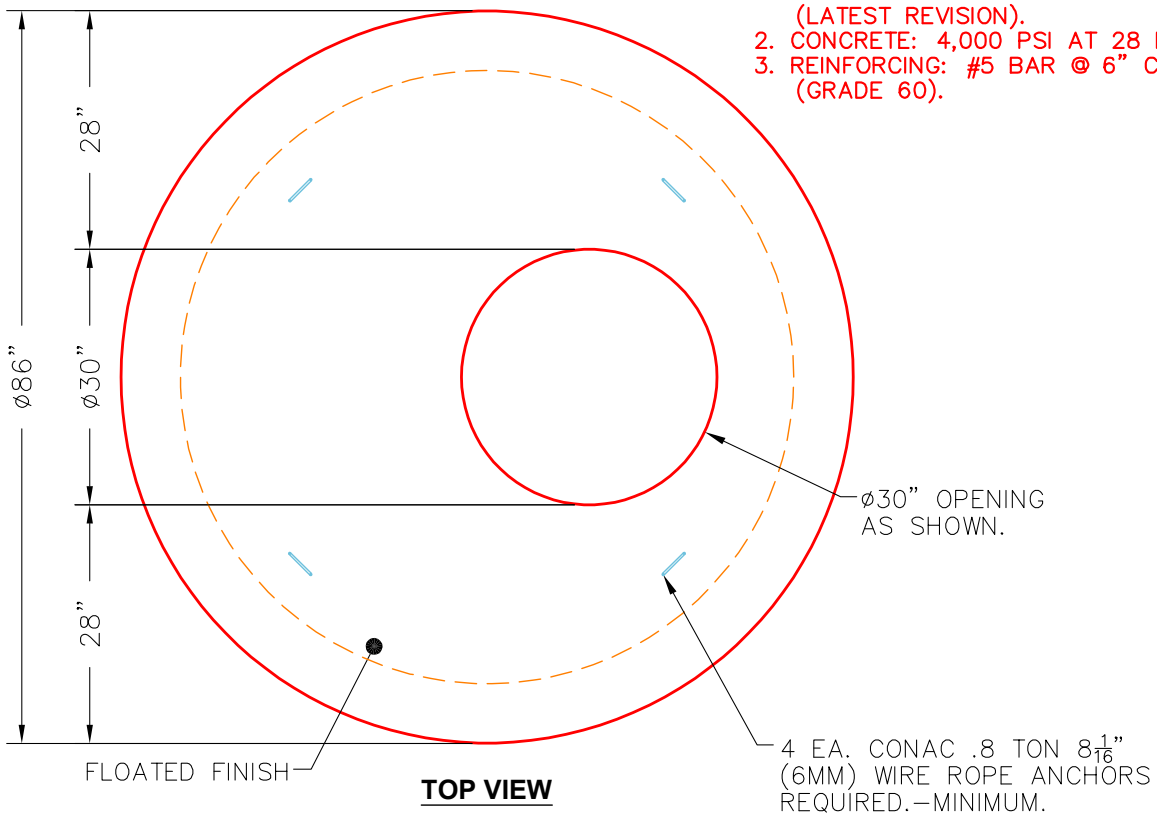

TOP VIEW

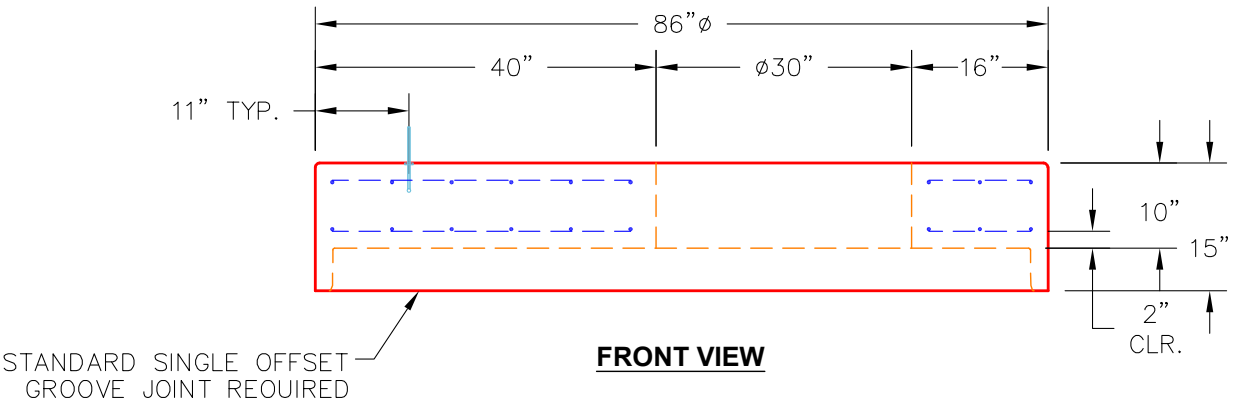

FRONT VIEW

Coating (Int): Coating (Ext):	Seam Up: Flat Seam Dn: Groove	Wall Thickness: 7"	Height (Ext): 15"	Weight (Net): 4661 lb Volume (Net): 1.19cu.yd

Job Name: 26-2800 901652 13635 Telegraph Road Job Location: CPU Contractor: Contech Engineering Solutions	Plant: Beaver Dam 6/24/2026 10:19:57 AM	Tech: S. Felletter PC: C. Goff	

Structure ID: 15-CS-6

P2 MH072RSVF MH RISER Custom Ht T/G

P4) 30" - CASTING HEIGHT - 0"	0 lb
P3) 72" - MH FLAT TOP w/ 30" CASTING CAST IN F/G - 15"	4663 lb
P2) 72" - MH RISER Custom Ht T/G - 70"	9967 lb
P1) 72" - MH BASE T/n - 24"	7398 lb
1) ASSEMBLY REQUIRED	0 lb
1) CVSTENCILING	0 lb
2) 72" - Conseal CS-102 1.00"	0 lb
2) Hole - 16	0 lb
Structure Total:	22028 lb

Structure Notes: .
4" CASTING BY OTHERS
.
LIFTING ANCHORS TO BE INSTALLED ON THE OUTSIDE OF THE STRUCTURE
.
ICAST TO INSTALL THE INTERNALS
.
CONTECH'S LOGO AS WELL AS THE INLET AND OUTLET MUST BE STENCILED ONTO THE STRUCTURE

Rim: 611.88' Rim to Invert: 3.33' Slack: -0.004" Sump: 69.036" Step Position:

Position	Elev	Angle	Ext. (cw)	Pipe	Pipe OD	Connector	Hole	Horz Size	Up (_)	Offset
Invert 1	608.55'	270°	202.633"	12" PVC SDR35	12.5"	Hole 16	16"	16.135"	38.036"	0"
Invert 2	608.55'	90°	67.544"	12" PVC SDR35	12.5"	Hole 16	16"	16.135"	38.036"	0"
Invert 3										
Invert 4										
Invert 5										
Invert 6										
Invert 7										
Invert 8										

RIGHT-SIDE UP VIEW (int. dimensions)

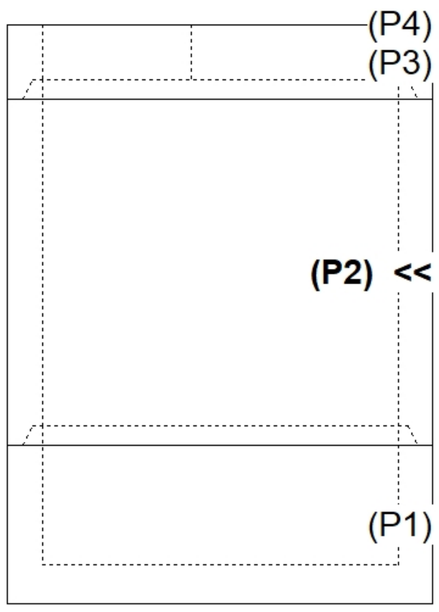

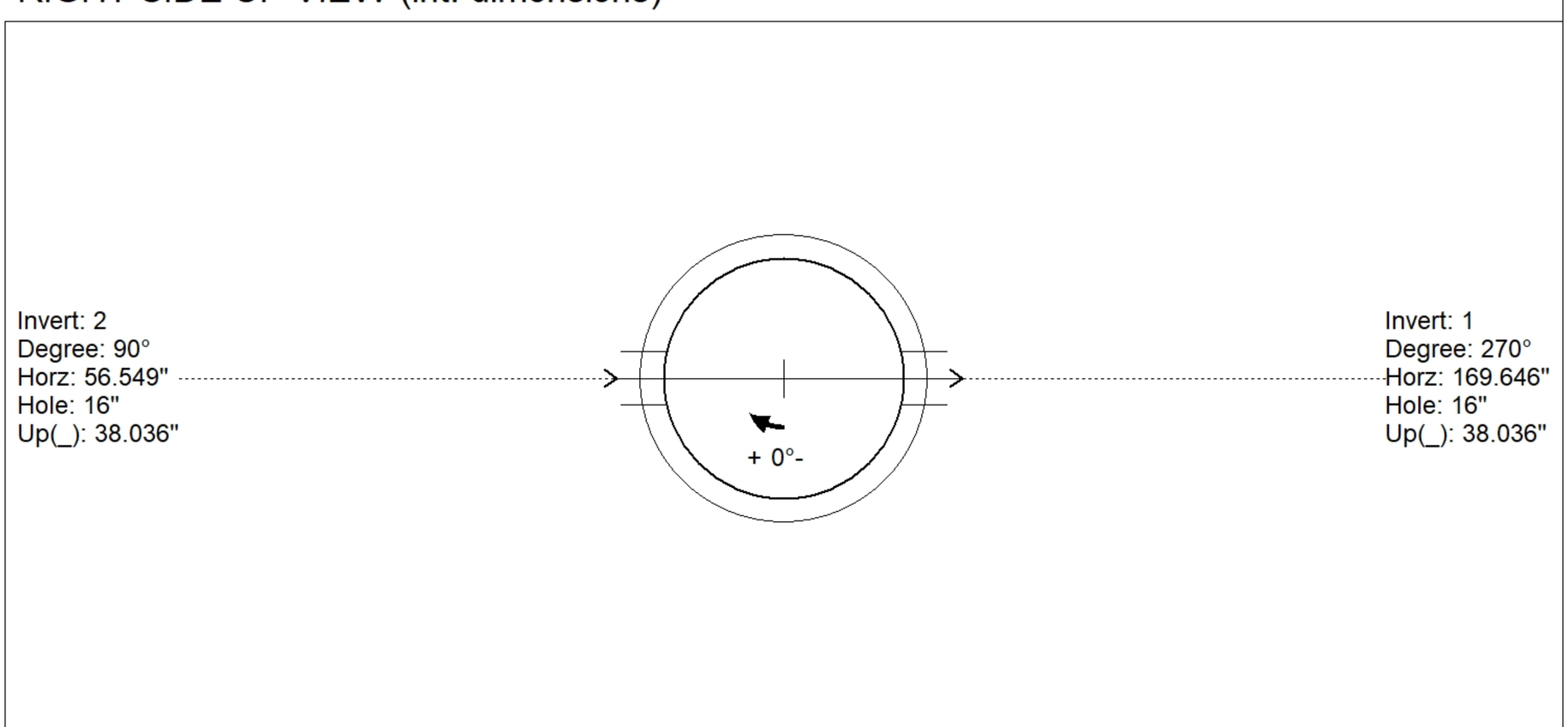

INSIDE WALL DIMENSIONS

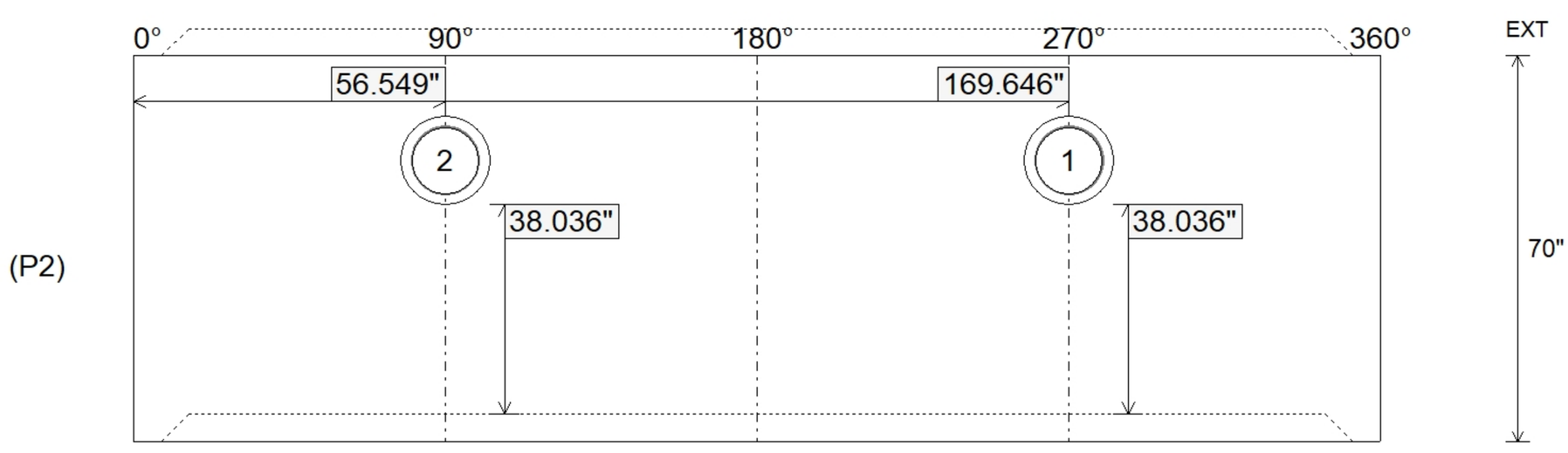

Coating (Int): Coating (Ext):	Seam Up: Tongue Seam Dn: Groove	Wall Thickness: 7" Floor Height: 0"	Height (Int): 70" Height (Ext): 70"	Weight (Net): 9967 lb Volume (Net): 2.55cu.yd

Job Name: 26-2800 901652 13635 Telegraph Road Job Location: CPU Contractor: Contech Engineering Solutions	Plant: Beaver Dam 6/24/2026 10:19:45 AM	Tech: S. Felletter PC: C. Goff	

Structure ID: 15-CS-6

P3 MH072LD15SP **MH FLAT TOP w/ 30" CASTING CAST IN F/G**

P4) 30" - CASTING HEIGHT - 0"	0 lb
P3) 72" - MH FLAT TOP w/ 30" CASTING CAST IN F/G - 15"	4663 lb
P2) 72" - MH RISER Custom Ht T/G - 70"	9967 lb
P1) 72" - MH BASE T/n - 24"	7398 lb
1) ASSEMBLY REQUIRED	0 lb
1) CVSTENCILING	0 lb
2) 72" - Conseal CS-102 1.00"	0 lb
2) Hole - 16	0 lb
Structure Total:	22028 lb

Structure Notes: .
4" CASTING BY OTHERS
.
LIFTING ANCHORS TO BE INSTALLED ON THE OUTSIDE OF THE STRUCTURE
.
ICAST TO INSTALL THE INTERNALS
.
CONTECH'S LOGO AS WELL AS THE INLET AND OUTLET MUST BE STENCILED ONTO THE STRUCTURE

NOTES:
1. MANUFACTURED TO ASTM C-478 (LATEST REVISION).
2. CONCRETE: 4,000 PSI AT 28 DAYS.
3. REINFORCING: #5 BAR @ 6" C.C. E.W. (GRADE 60).

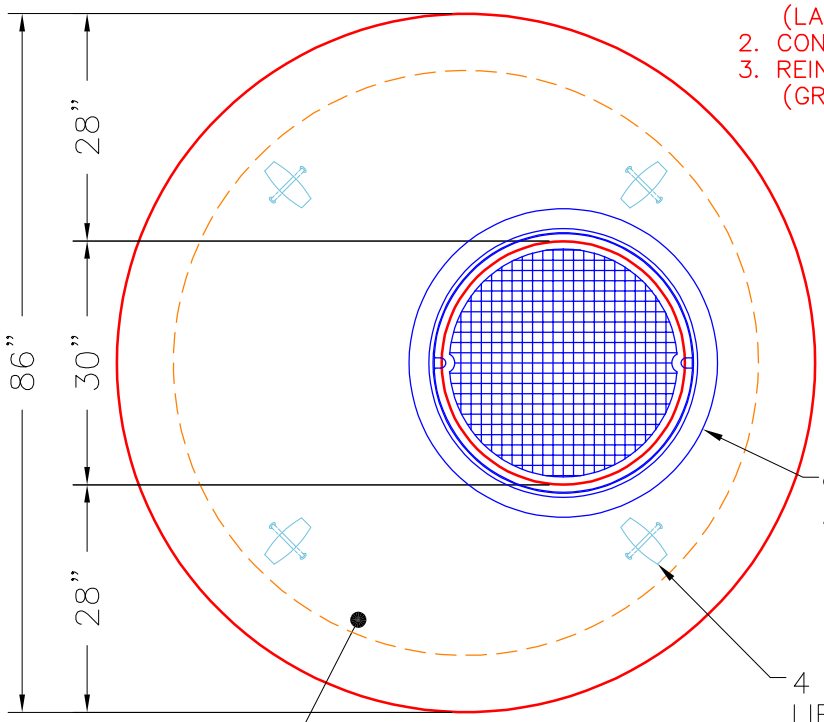

TOP VIEW

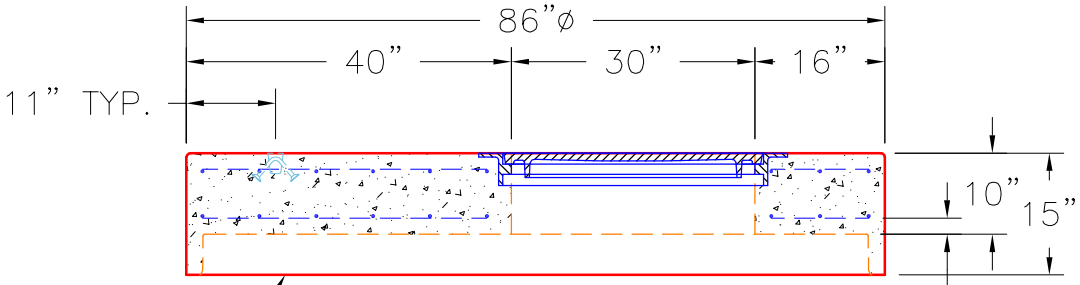

STANDARD SINGLE OFFSET GROOVE JOINT REQUIRED

FRONT VIEW

Coating (Int): Coating (Ext):	Seam Up: Flat Seam Dn: Groove	Wall Thickness: 7"	Height (Ext): 15"	Weight (Net): 4663 lb Volume (Net): 1.19cu.yd

Job Name: 25-3062 Portland Bypass Job Location: Portland, TN Contractor: Scotty's Contracting & Stone, LLC	Plant: Beaver Dam 6/1/2026 8:24:18 AM	Tech: J. Coppage PC: C. Goff	

Structure ID: CB-34

P3 MH084LD10SP **MH FLAT TOP - TDOT NO 31RC (28"x34" HOLE)**

P4) 28" x 34" - CASTING HEIGHT - 7"	0 lb
P3) 84" - MH FLAT TOP - TDOT NO 31RC (28"x34" HOLE) - 10"	5411 lb
P2) 84" - MH RISER - 36"	6966 lb
P1) 84" - MH BASE Custom Ht - 71"	15202 lb
1) CASTING - JBS-3123 MODIFIED SET	250 lb
2) 84" - Conseal CS-102 1.00"	0 lb
1) 28" x 34" - Conseal CS-102 1.00"	0 lb
2) Hole - 54	0 lb
1) Hole - 32	0 lb
1) Hole - 6	0 lb
Structure Total:	27829 lb

Structure Notes:
1. PER TDOT D-CB-12RC / ASTM C478 SPEC'S.
2. CONCRETE = 4,000 PSI AT 28 DAYS.
3. JBS 3123 MOD SINGLE SET BY ICAST
4. REINFORCING PER ASTM A615 (GRADE 60).

** PER TDOT STD DRAWING D-CB-12RC **
- TOP SLAB - DBL MAT #5 BARS.
- RISER (As .18)
- FLOOR (As .62) #5 BARS AT 6" C.C.E.W.

NOTES:
1. MANUFACTURED TO ASTM C-478 (LATEST REVISION).
2. CONCRETE: 4,000 PSI AT 28 DAYS.
3. REINFORCING: PER TDOT DRAWING D-CB-12RC OR D-RL-1 FOR WWM OPTION.

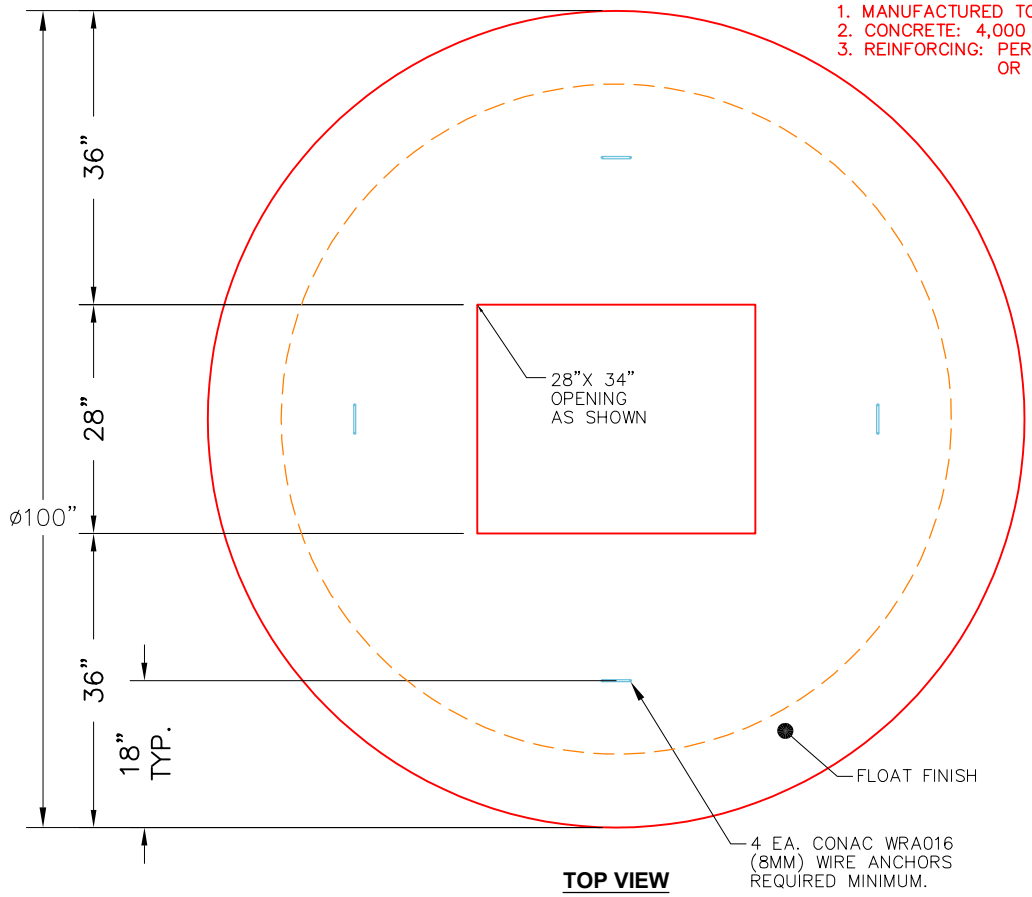

TOP VIEW

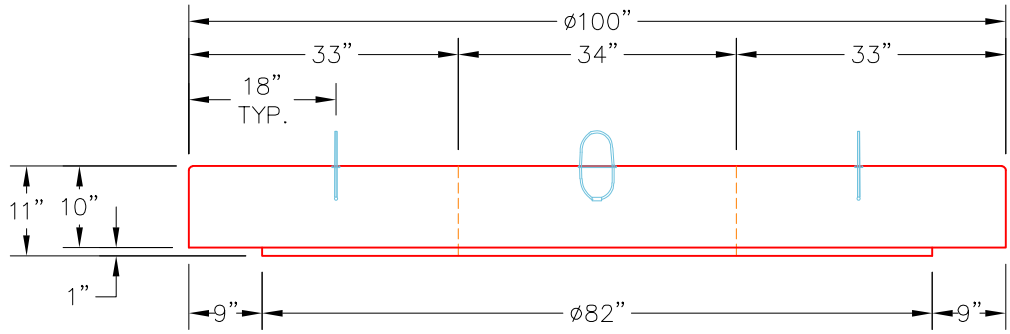

FRONT VIEW

Coating (Int): Coating (Ext):	Seam Up: Flat Seam Dn: Flat	Wall Thickness: 8"	Height (Ext): 10"	Weight (Net): 5411 lb Volume (Net): 1.38cu.yd

Job Name: 24-1643B - KYTC McCracken Co. Call 200 (ID 241301)
Job Location: Paducah, KY
Contractor: Jim Smith Contracting Co, LLC

Structure ID: St. 43+62 (PC 15)

P1 BC096072-08WLF-9HC BOX CULVERT (08W/08F/08T) G/T

Plant: 100 | Tech: J. Horsley
5/28/2026 7:51:20 AM | PC: C. Goff

GENERAL NOTES:

1. PER SECTION 605 OF KYTC STANDARD SPECS FOR ROAD & BRIDGE CONSTRUCTION
   - KYTC STAMP REQUIRED
   - WEEP HOLES REQUIRED
2. LOAD REQUIREDMENTS: KY-HL93 (KY TABLE 1)
3. REINFORCEMENT PER ATTACHED KYTC TABLE 1
4. COVER DEPTH: 10'
5. CONCRETE: 5,000 PSI AT 28 DAYS
6. JOINT SEALANT: 1" BUTYL MASTIC (CS-102)
   EXTERIOR JOINT WRAP: 12" WIDE (CS-212)
7. WEIGHT: 8' X 6' RCBC = 3,138 LBS / LF
   (5'-9" LONG SECTION = 18,044 LBS)

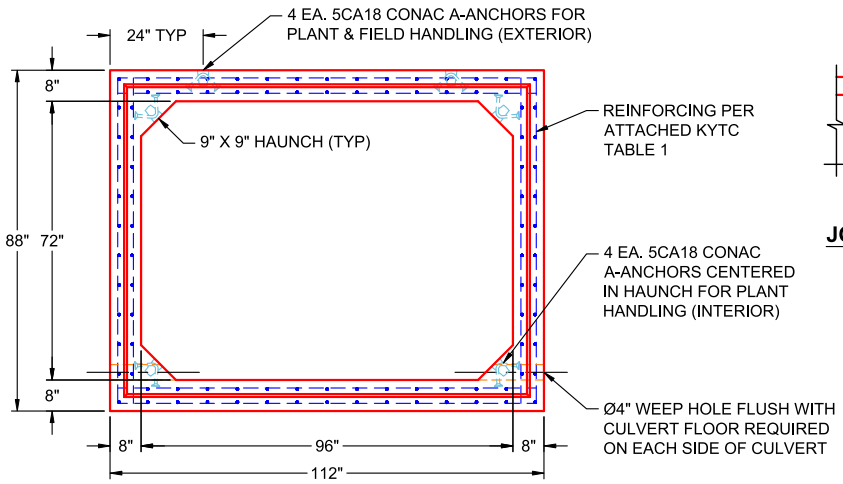

END VIEW
TYPICAL

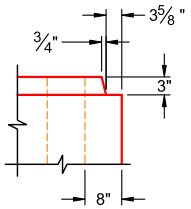

JOINT DETAIL (TYP)
NTS

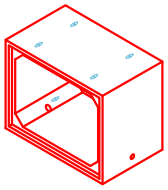

COMPONENT ISOMETRIC VIEW

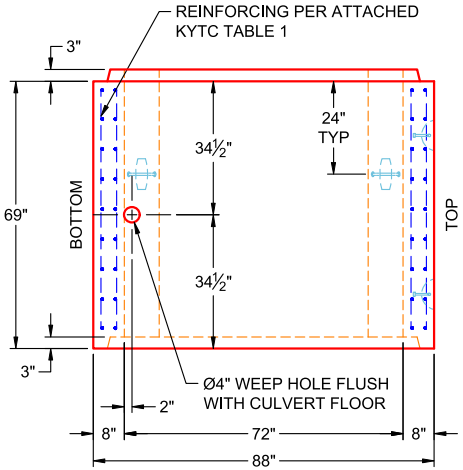

VIEW A
PC 15
(UPRIGHT IN MOLD)

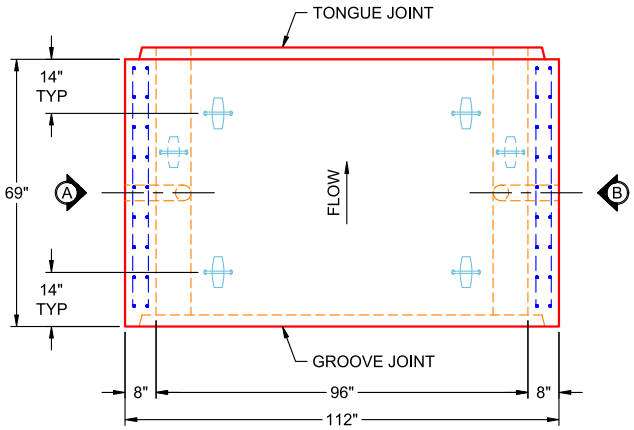

PLAN VIEW
PC 15
(UPRIGHT IN MOLD)

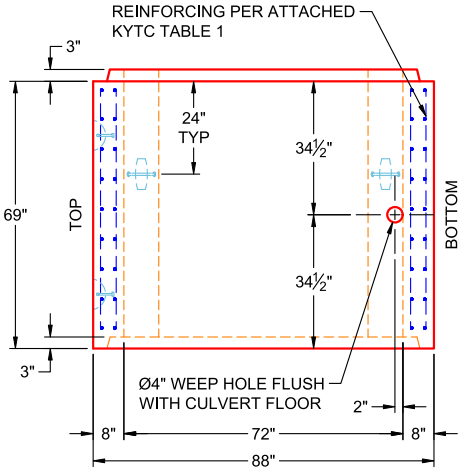

VIEW B
PC 15
(UPRIGHT IN MOLD)

PRODUCTION WORK ORDER	PRODUCT I.D.: BC096072-08WLF-9H	DESCRIPTION: 96" X 72" X 69" BOX CULVERT (8" WALLS & 9" HAUNCH)	
QUALITY CONTROL CHECKLIST	PRODUCT VIEW: RIGHT SIDE UP	CUSTOMER: JIM SMITH CONTRACTING	
☐ ALL DIMENSIONS CORRECT.	PLANT: BEAVER DAM, KY	PROJECT: KYTC MCCRACKEN CO. CALL 200 (ID 241301)	
☐ LIFTERS INSTALLED INSIDE.	WEIGHT: 18,044 LBS	STRUCTURE: ST. 43+62 (PC 15)	
☐ RECESS WITH HAUNCHES CORRECT.	TOP SECTION JOINT: TONGUE	ORDER NO: 24-1643B	
☐ REINFORCING CORRECT.	BASE SECTION JOINT: GROOVE	PE: J.H. ROSS	DRAWING: K. CARDWELL
☐ SURFACE QUALITY ACCEPTABLE.	QC CHECK INITIALS:	DATE: 05/28/26	SCALE: NTS / PG. 1 OF 1
☐ LIFTERS INSTALLED OUTSIDE.			
☐ PRODUCT SQUARE.			

THIS DRAWING IS THE PROPERTY OF INFRASTRUCTURE PRECAST, INC. ANY USE OR DUPLICATION OF THIS DRAWING WITHOUT PRIOR AUTHORIZATION IS STRICTLY PROHIBITED.

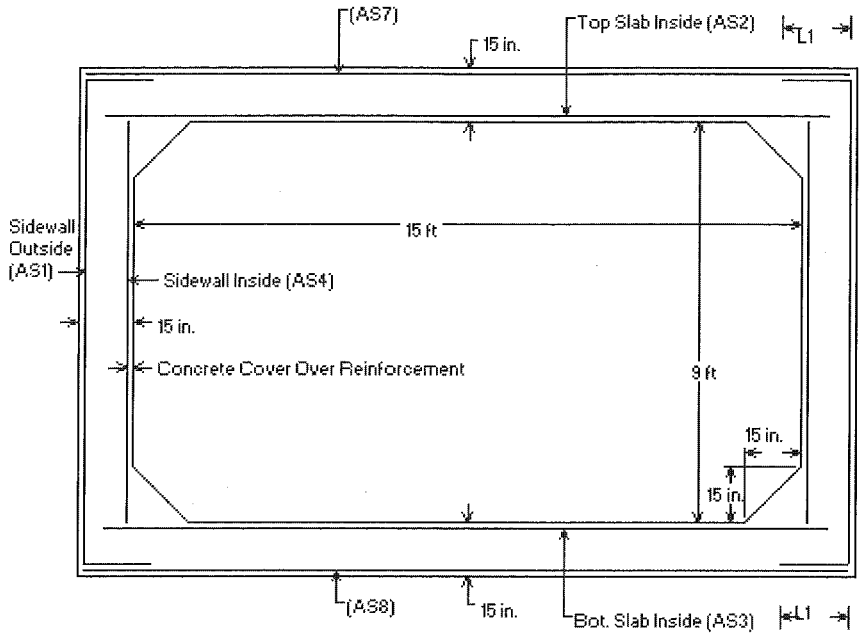

* <L1> is Splice Length
* (AS7) is Top Slab Outside
* (AS8) is Bottom Slab Outside
* See Box Culvert Design Summary Sheet for transverse and distribution reinforcement, as required.
* For sidewall thicknesses of 6 in. and above, extend AS2 and AS3 a min. of 4 in. beyond the inside face of the sidewall. For thicknesses less than 6 in., extend AS2 and AS3 at least to within 1-1/2 in. of the outside face of the sidewall.

Notes:

1) Other reinforcement schemes that provide the required reinforcement areas at all locations identified in the program output are acceptable.
2) Longitudinal reinforcement is not shown for clarity, see AASHTO M259 for longitudinal reinforcement and for additional requirements.

KY Table 1

Precast Culvert KYHL-93 Design Table

	Design Earth Cover, ft	As1	As2	As3	As4	As7	As8	As5	As6
8x6x8	0<2	0.267	0.536	0.382	0.192	0.192	0.192	0.192	0.192
	2<3	0.266	0.458	0.382	0.192	0.192	0.192	0.192	0.192
	3-5	0.237	0.392	0.359	0.192	0.192	0.192		
	10	0.244	0.365	0.38	0.192	0.192	0.192		
	15	0.321	0.489	0.505	0.192	0.192	0.192		
	20	0.408	0.627	0.644	0.192	0.192	0.192		
	25	0.502	0.774	0.791	0.192	0.192	0.192		
	30	0.602	0.928	0.946	0.192	0.192	0.192		
	35	0.708	1.089	1.108	0.192	0.192	0.192		

	Design Earth Cover, ft	As1	As2	As3	As4	As7	As8	As5	As6
8x7x8	0<2	0.245	0.557	0.403	0.192	0.192	0.192	0.197	0.192
	2<3	0.243	0.479	0.403	0.192	0.192	0.192	0.192	0.192
	3-5	0.215	0.409	0.378	0.192	0.192	0.192		
	10	0.225	0.378	0.396	0.192	0.192	0.192		
	15	0.295	0.507	0.526	0.192	0.192	0.192		
	20	0.374	0.651	0.671	0.192	0.192	0.192		
	25	0.459	0.804	0.825	0.192	0.192	0.192		
	30	0.549	0.965	0.987	0.192	0.192	0.192		
	35	0.644	1.134	1.157	0.192	0.192	0.192		

	Design Earth Cover, ft	As1	As2	As3	As4	As7	As8	As5	As6
8x8x8	0<2	0.226	0.575	0.42	0.192	0.192	0.192	0.203	0.192
	2<3	0.224	0.494	0.42	0.192	0.192	0.192	0.192	0.192
	3-5	0.201	0.423	0.393	0.192	0.192	0.192		
	10	0.211	0.386	0.407	0.192	0.192	0.192		
	15	0.276	0.518	0.54	0.192	0.192	0.192		
	20	0.349	0.665	0.688	0.192	0.192	0.192		
	25	0.427	0.822	0.846	0.192	0.192	0.192		
	30	0.51	0.988	1.013	0.192	0.192	0.192		

Default Configuration (page 1)

Default Parameters

Data Directory: c:

Jeremiah.Littleton
Documents
BOXCAR3.1

○ SI Unit File ◉ Customary US Unit File

Section Length 8 ft

Box Geometry

	SPAN < / ft				SPAN > / ft			
Top Slab Thickness	{Span/	12	+ 1 }	in.	{Span/	12	+ 0 }	in.
Bottom Slab Thickness	{Span/	12	+ 1 }	in.	{Span/	12	+ 0 }	in.
Sidewall Thickness	{Span/	12	+ 1 }	in.	{Span/	12	+ 0 }	in.
Horizontal Haunch Length	{Span/	12	+ 1 }	in.	{Span/	12	+ 0 }	in.
Vertical Haunch Length	{Span/	12	+ 1 }	in.	{Span/	12	+ 0 }	in.

Clear Concrete Covers

Top Slab Outside Face	2	in.	(MINIMUM DEPTH OF FILL < 2 ft)
Top Slab Outside Face	1	in.	(MINIMUM DEPTH OF FILL >= 2 ft)
Bottom Slab Outside Face	1	in.	
Sidewall Outside Face	1	in.	
Top Slab Inside Face	1	in.	
Bottom Slab Inside Face	1	in.	
Sidewall Inside Face	1	in.	

Reinforcement Type: Welded Wire

Material Properties

Main Reinforcement Yield Strength	65000	psi
Design Concrete Strength	5000	psi
Concrete Unit Weight	150	pcf
Stirrup Reinforcement Developable Yield Stress	60000	psi
Total Service Stress Limit	100	%

Restore Default Settings

Next Page >> | Return to Main Menu

Default Configuration (page 2)

Design Code: AASHTO - LRFD

Strength Reduction Factors

Design Code

Flexure	1
Shear	0.9

Axial Thrust Load Factor: User Specified 1

Crack Width (CHBDC Only) 0.25 mm

Reinforcement Diameter

		Diameter				Maximum Spacing	
Sidewall Outside	(AS1)	{ 0.05	* Sidewall Thickness	+ 0 }	in.	4	in.
Top Inside	(AS2)	{ 0.05	* Top Slab Thickness	+ 0 }	in.	4	in.
Bottom Inside	(AS3)	{ 0.05	* Bottom Slab Thickness	+ 0 }	in.	4	in.
Sidewall Inside	(AS4)	{ 0.05	* Sidewall Thickness	+ 0 }	in.	4	in.
Top Outside	(AS7)	{ 0.05	* Top Slab Thickness	+ 0 }	in.	4	in.
Bottom Outside	(AS8)	{ 0.05	* Bottom Slab Thickness	+ 0 }	in.	4	in.

Soil Load Data

Soil Unit Weight	120	pcf
Minimum Lateral Pressure Coefficient	0.25	
Maximum Lateral Pressure Coefficient	0.5	

Vertical Arching Factor: Embankment/Compacted

<<Previous Page | Next Page >> | Return to Main Menu

Boxcar - Default (page 3) [illegible]

Live Load Data

Live Load Type (Max 2)	Magnitude (N)		Footprint	User Specified (Not by Code) Length		Width	
☑ HS-Series	25	tons	☑ By Code	10	in.	20	in.
☑ Interstate/Tandem	25	kips	☑ By Code	10	in.	20	in.
☐ Cooper Series	80	kips	☑ By Code	0	in.	0	in.
☐ CHBDC Truck	140	kips	☑ By Code	10	in.	24	in.
☐ Tandem/Tridem	140	kips	☐ By Code	10	in.	20	in.
☐ Other	10	kips	☐ By Code	10	in.	20	in.
☐ None							

Direction of Traffic: Parallel To Span

Impact Factor Options: Design Code

Impact Factor (User Def) 1

Lane Load 0 lb/ft

Live Load Distribution Factor (LLDF): Design Code 1.15

Interstate/Tandem Truck Wheel Layout

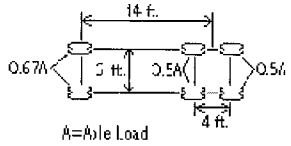

Fluid Loads

Depth of Fluid	1	* Rise
Fluid Unit Weight	62.5	pcf

Surcharge Loads

Uniform Vertical	0	lb/ft
Lateral - Top of Culvert (LLTC)	90	lb/ft
Lateral - Bottom of Culvert (LLBC)	90	lb/ft

<<Previous Page | Next Page >> | Return to Main Menu

Job Name: 26-1651B Buffalo Trace Job Location: Campbellsville, KY Contractor: Buzick Construction	Plant: Beaver Dam 6/30/2026 8:22:48 AM	Tech: S. Felletter PC: E. Bradley	

Structure ID: CB 792.05

P1 BX3636-08BAVF BOX BASE 8inW, 8inF, Variable Ht F/n

P2) 36" x 36" - CASTING HEIGHT - 3"	0 lb
P1) 36" x 36" - BOX BASE 8inW, 8inF, Variable Ht F/n - 27"	4676 lb
1) CASTING - HOE 595 F/G	376 lb
1) 36" x 36" - Conseal CS-102 1.00"	0 lb
1) Hole - 25	0 lb
2) MH Step ML-10-TDS-NCR - 10"	0 lb
Structure Total:	5052 lb

Structure Notes: .
1. PER ASTM C478 SPECIFICATIONS.
2. CONCRETE = 4,000 PSI AT 28 DAYS.
3. CASTING BY ICAST (HOE 595 F/C).

.
REINFORCING PER ASTM A615 (GRADE 60).
- RISER/WALLS (As .12).
- FLOOR (As .31) #5 BARS AT 12" C.C.E.W.

Rim: 794.61' Rim to Invert: 2.56' Slack: 0.72" Sump: 0" Step Position: 180°

Position	Elev	Angle	Ext. (cw)	Pipe	Pipe OD	Connector	Hole	Horz Size	Up (_)	Offset
Invert 1	792.05'	0°	26"	18" RCP B WALL	23"	Hole 25	25"	25"	-2.5"	0"
Invert 2										
Invert 3										
Invert 4										
Invert 5										
Invert 6										
Invert 7										
Invert 8										

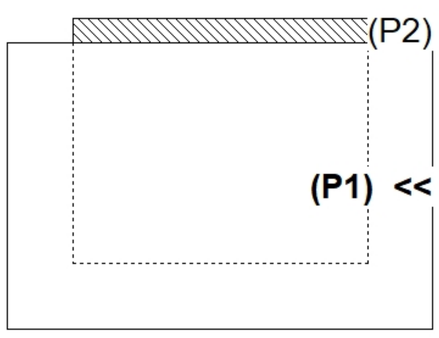

RIGHT-SIDE UP VIEW (int. dimensions)

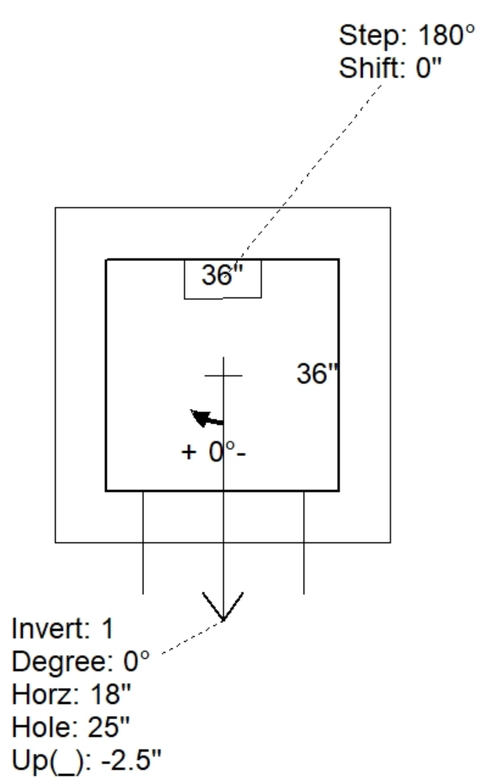

UPSIDE-DOWN VIEW (int. dimenions)

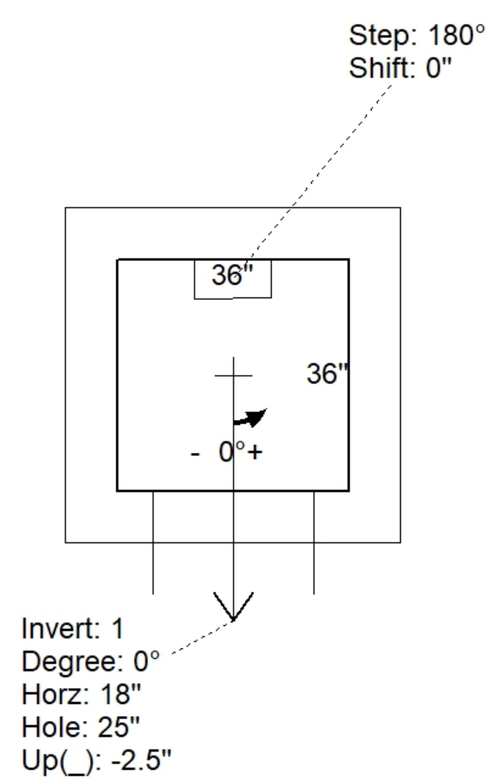

INSIDE WALL DIMENSIONS

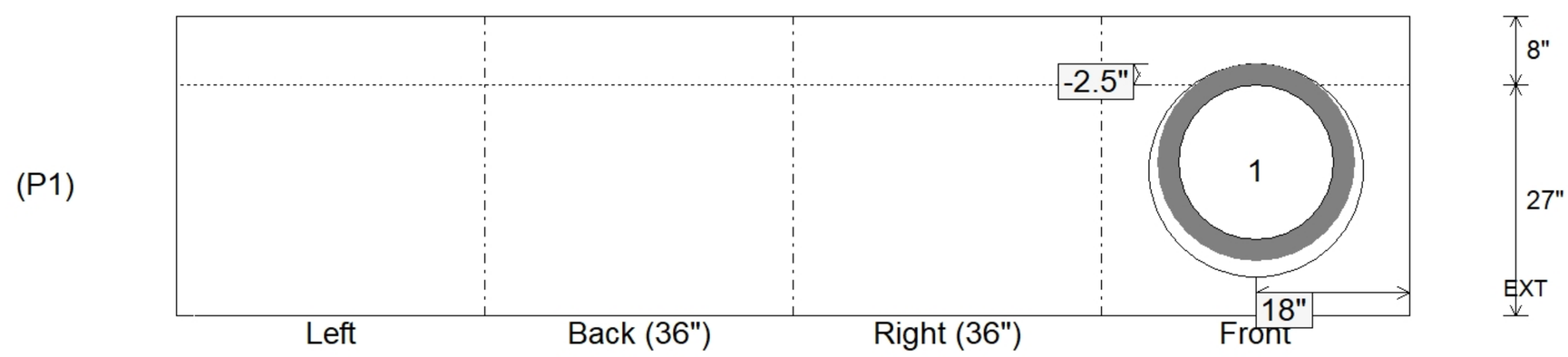

Coating (Int): Coating (Ext):	Seam Up: Flat Seam Dn: n/a	Wall Thickness: 8" Floor Height: 8"	Height (Int): 27" Height (Ext): 35"	Weight (Net): 4676 lb Volume (Net): 1.19cu.yd

Job Name: 26-2104 - Jeffersonville High School Parking Lot Job Location: Jeffersonville, IN Contractor: Mac Construction & Excavating, Inc.	Plant: 100 6/27/2026 7:12:36 PM	Tech: Jared - A PC: T. Lewis	

Structure ID: 9 ST-CB

P1 BX2424-06BA24 BOX BASE 6inW, 6inF F/n

P2) 24" x 24" - CASTING HEIGHT - 4"	0 lb
P1) 24" x 24" - BOX BASE 6inW, 6inF F/n - 24"	1974 lb
1) 24" x 24" - Conseal CS-102 1.00"	0 lb
1) Hole - 18	0 lb
Structure Total:	1974 lb

Structure Notes:
1. PER ASTM C-913 SPECIFICATIONS
2. CONCRETE: 4,000 PSI AT 28 DAYS
3. REINFORCEMENT: #5 BAR @ 12" C.C. E.W. (GRADE 60) - 2" MIN. REBAR CLEARANCE (TYP)
4. STORM INVERT BY OTHERS
5. HOE-326-BH FRAME & BEEHIVE GRATE SUPPLIED BY OTHERS

Rim: 483.37' Rim to Invert: 2.21' Slack: 0.52" Sump: 2" Step Position:

Position	Elev	Angle	Ext. (cw)	Pipe	Pipe OD	Connector	Hole	Horz Size	Up (_)	Offset
Invert 1	481.16'	180°	18"	12" RCP B WALL	16"	Hole 18	18"	18"	0"	0"
Invert 2										
Invert 3										
Invert 4										
Invert 5										
Invert 6										
Invert 7										
Invert 8										

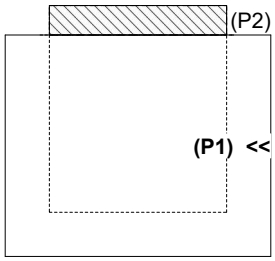

RIGHT-SIDE UP VIEW (int. dimensions)

UPSIDE-DOWN VIEW (int. dimenions)

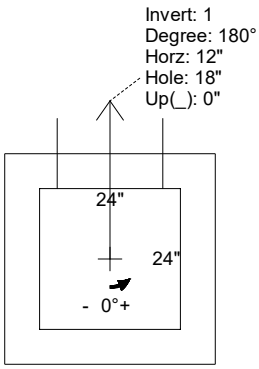

INSIDE WALL DIMENSIONS

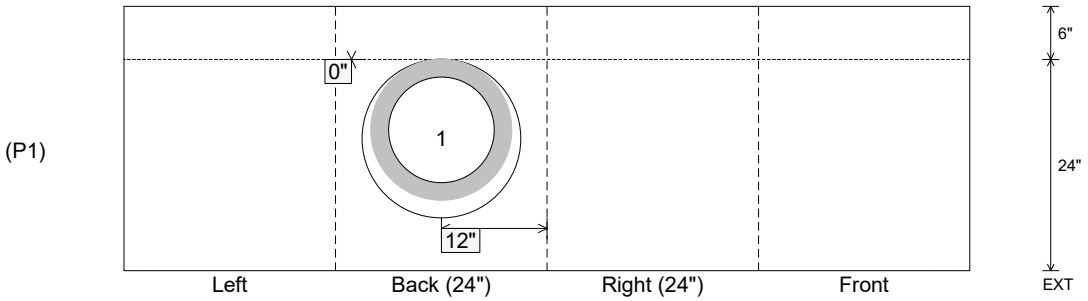

Coating (Int): Coating (Ext):	Seam Up: Flat Seam Dn: n/a	Wall Thickness: 6" Floor Height: 6"	Height (Int): 24" Height (Ext): 30"	Weight (Net): 1974 lb Volume (Net): 0.5cu.yd

Job Name: 25-3193 - KYTC Kenton Co Call 328 (251320) Job Location: Independence, KY Contractor: Eaton Asphalt	Plant: 100 6/4/2026 4:51:35 PM	Tech: Jared - A PC: J. Jarvis	

Structure ID: 488

P1 BX2436-08BVF **BOX BASE 8inW, 8inF, Variable Ht T/n**

P3) 24" x 120" - CB INLET KY A 10' TOP LEFT F/G - 10"	3400 lb
P2) 24" x 120" - CB INLET KY A 10' BOTTOM LEFT T/G - 18"	5270 lb
P1) 24" x 36" - BOX BASE 8inW, 8inF, Variable Ht T/n - 29"	4144 lb
1) CASTING - HOE KY-206 F/C (KY TY1)	206 lb
1) This Structure Includes a Cast-in Item - KY-206 Frame (Supplied by iCast)	0 lb
1) 24" x 36" - Conseal CS-102 1.00"	0 lb
1) Hole - 20	0 lb
2) Hole - 8	0 lb
Structure Total:	13020 lb

Structure Notes:

** KYTC STATE PROJECT **

1. PER KYTC CBI TY A / ASTM C-913 SPECS
2. CONCRETE: 4,000 PSI AT 28 DAYS
3. REINFORCEMENT: #5 BAR @ 12" C.C. E.W. (GRADE 60) - 2" MIN. REBAR CLEARANCE (TYP)
4. NO STORM INVERT
5. NO STEPS
6. KY-206 FRAME & COVER "STORM" SUPPLIED BY ICAST - FRAME TO BE CAST INTO TOP PHASE TOP FLANGE SIDE UP
7. INVERT 2 OFFSET 14" FROM CENTER OF WALL

Rim: 898.86' Rim to Invert: 4.75' Slack: 0" Sump: 0" Step Position:

Position	Elev	Angle	Ext. (cw)	Pipe	Pipe OD	Connector	Hole	Horz Size	Up (_)	Offset
Invert 1	894.11'	0°	20"	15" ADS N-12	18"	Hole 20	20"	20"	-2.5"	0"
Invert 2	895.69'	90°	12"	4" HDPE (perf pipe)	4.8"	Hole 8	8"	8"	17"	-14"
Invert 3	895.69'	180°	20"	4" HDPE (perf pipe)	4.8"	Hole 8	8"	8"	17"	0"
Invert 4										
Invert 5										
Invert 6										
Invert 7										
Invert 8										

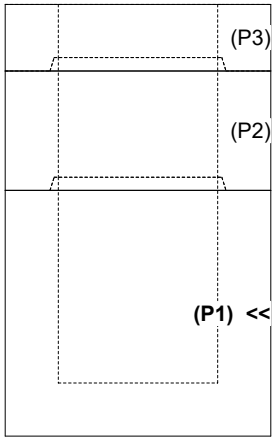

RIGHT-SIDE UP VIEW (int. dimensions)

UPSIDE-DOWN VIEW (int. dimenions)

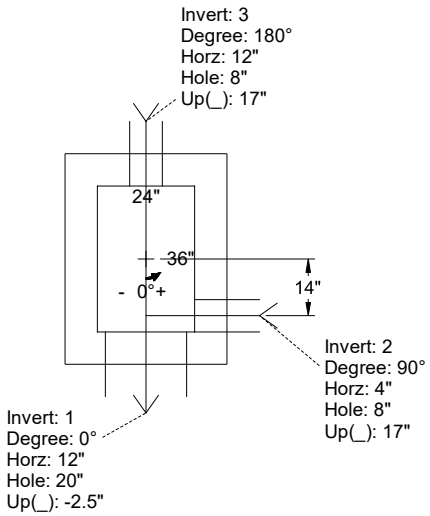

INSIDE WALL DIMENSIONS

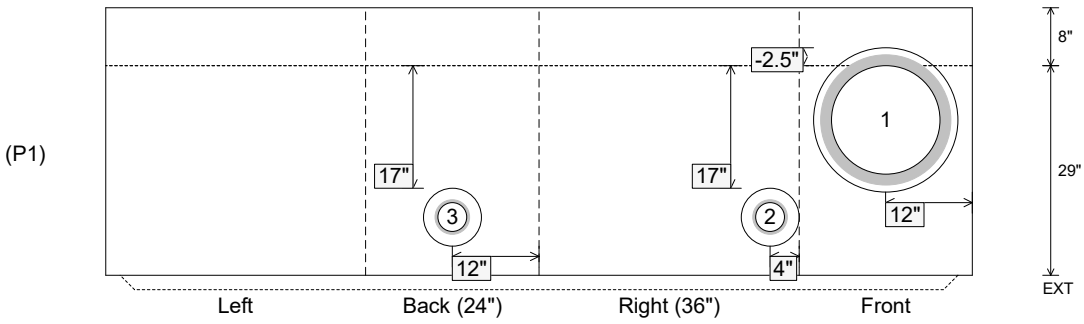

Coating (Int): Coating (Ext):	Seam Up: Tongue Seam Dn: n/a	Wall Thickness: 8" Floor Height: 8"	Height (Int): 29" Height (Ext): 37"	Weight (Net): 4144 lb Volume (Net): 1.06cu.yd

Job Name: 25-3193 - KYTC Kenton Co Call 328 (251320) Job Location: Independence, KY Contractor: Eaton Asphalt	Plant: 100 6/4/2026 4:51:33 PM	Tech: Jared - A PC: J. Jarvis	

Structure ID: 486

P1 BX2436-08BVF BOX BASE 8inW, 8inF, Variable Ht T/n

P3) 24" x 120" - CB INLET KY A 10' TOP LEFT F/G - 10"	3400 lb
P2) 24" x 120" - CB INLET KY A 10' BOTTOM LEFT T/G - 18"	5270 lb
P1) 24" x 36" - BOX BASE 8inW, 8inF, Variable Ht T/n - 33"	4536 lb
1) CASTING - HOE KY-206 F/C (KY TY1)	206 lb
1) This Structure Includes a Cast-in Item - KY-206 Frame (Supplied by iCast)	0 lb
1) 24" x 36" - Conseal CS-102 1.00"	0 lb
1) Hole - 24	0 lb
2) Hole - 8	0 lb
Structure Total:	13411 lb

Structure Notes:

** KYTC STATE PROJECT **

1. PER KYTC CBI TY A / ASTM C-913 SPECS
2. CONCRETE: 4,000 PSI AT 28 DAYS
3. REINFORCEMENT: #5 BAR @ 12" C.C. E.W. (GRADE 60) - 2" MIN. REBAR CLEARANCE (TYP)
4. NO STORM INVERT
5. NO STEPS
6. KY-206 FRAME & COVER "STORM" SUPPLIED BY ICAST - FRAME TO BE CAST INTO TOP PHASE TOP FLANGE SIDE UP
7. INVERT 3 OFFSET 14" FROM CENTER OF WALL

Rim: 890.93' Rim to Invert: 5.09' Slack: 0.08" Sump: 0" Step Position:

Position	Elev	Angle	Ext. (cw)	Pipe	Pipe OD	Connector	Hole	Horz Size	Up (_)	Offset
Invert 1	885.84'	0°	20"	18" ADS N-12	22"	Hole 24	24"	24"	-3"	0"
Invert 2	887.76'	180°	20"	4" HDPE (perf pipe)	4.8"	Hole 8	8"	8"	21"	0"
Invert 3	887.76'	90°	12"	4" HDPE (perf pipe)	4.8"	Hole 8	8"	8"	21"	-14"
Invert 4										
Invert 5										
Invert 6										
Invert 7										
Invert 8										

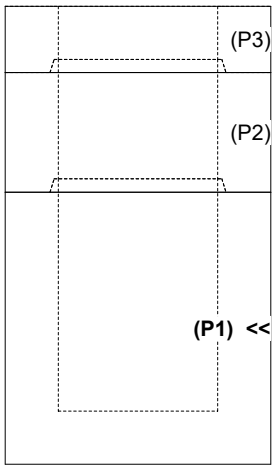

RIGHT-SIDE UP VIEW (int. dimensions)

UPSIDE-DOWN VIEW (int. dimenions)

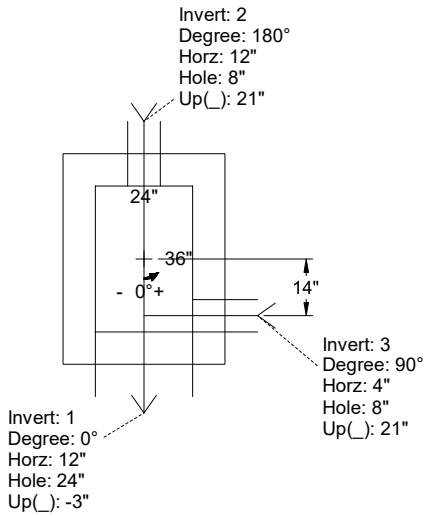

INSIDE WALL DIMENSIONS

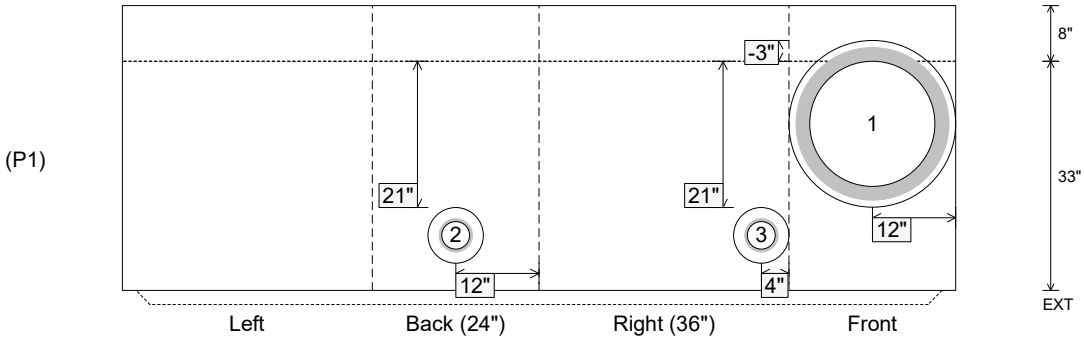

Coating (Int): Coating (Ext):	Seam Up: Tongue Seam Dn: n/a	Wall Thickness: 8" Floor Height: 8"	Height (Int): 33" Height (Ext): 41"	Weight (Net): 4536 lb Volume (Net): 1.16cu.yd

Job Name: 25-3193 - KYTC Kenton Co Call 328 (251320) Job Location: Independence, KY Contractor: Eaton Asphalt	Plant: 100 6/4/2026 4:51:31 PM	Tech: Jared - A PC: J. Jarvis	

Structure ID: 487

P1 BX2436-08BVF BOX BASE 8inW, 8inF, Variable Ht T/n

P3) 24" x 120" - CB INLET KY A 10' TOP RIGHT F/G - 10"	3398 lb
P2) 24" x 120" - CB INLET KY A 10' BOTTOM RIGHT T/G - 18"	5270 lb
P1) 24" x 36" - BOX BASE 8inW, 8inF, Variable Ht T/n - 39"	4853 lb
1) CASTING - HOE KY-206 F/C (KY TY1)	206 lb
1) This Structure Includes a Cast-in Item - KY-206 Frame (Supplied by iCast)	0 lb
1) 24" x 36" - Conseal CS-102 1.00"	0 lb
2) Hole - 24	0 lb
2) Hole - 8	0 lb
Structure Total:	13726 lb

Structure Notes:

** KYTC STATE PROJECT **

1. PER KYTC CBI TY A / ASTM C-913 SPECS
2. CONCRETE: 4,000 PSI AT 28 DAYS
3. REINFORCEMENT: #5 BAR @ 12" C.C. E.W. (GRADE 60) - 2" MIN. REBAR CLEARANCE (TYP)
4. NO STORM INVERT
5. NO STEPS
6. KY-206 FRAME & COVER "STORM" SUPPLIED BY ICAST - FRAME TO BE CAST INTO TOP PHASE TOP FLANGE SIDE UP

Rim: 890.92' Rim to Invert: 5.62' Slack: 0.44" Sump: 0" Step Position:

Position	Elev	Angle	Ext. (cw)	Pipe	Pipe OD	Connector	Hole	Horz Size	Up (_)	Offset
Invert 1	885.3'	0°	20"	18" ADS N-12	22"	Hole 24	24"	24"	-3"	0"
Invert 2	885.3'	180°	20"	18" ADS N-12	22"	Hole 24	24"	24"	-3"	0"
Invert 3	887.72'	0°	20"	4" HDPE (perf pipe)	4.8"	Hole 8	8"	8"	27"	0"
Invert 4	887.72'	180°	20"	4" HDPE (perf pipe)	4.8"	Hole 8	8"	8"	27"	0"
Invert 5										
Invert 6										
Invert 7										
Invert 8										

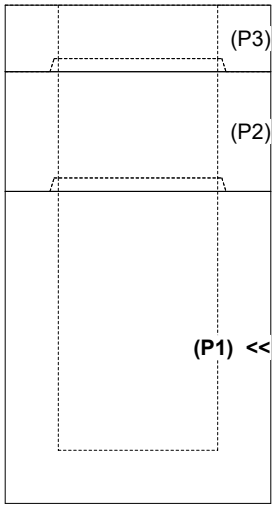

RIGHT-SIDE UP VIEW (int. dimensions)

UPSIDE-DOWN VIEW (int. dimenions)

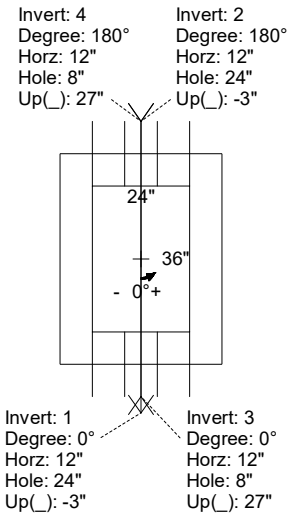

INSIDE WALL DIMENSIONS

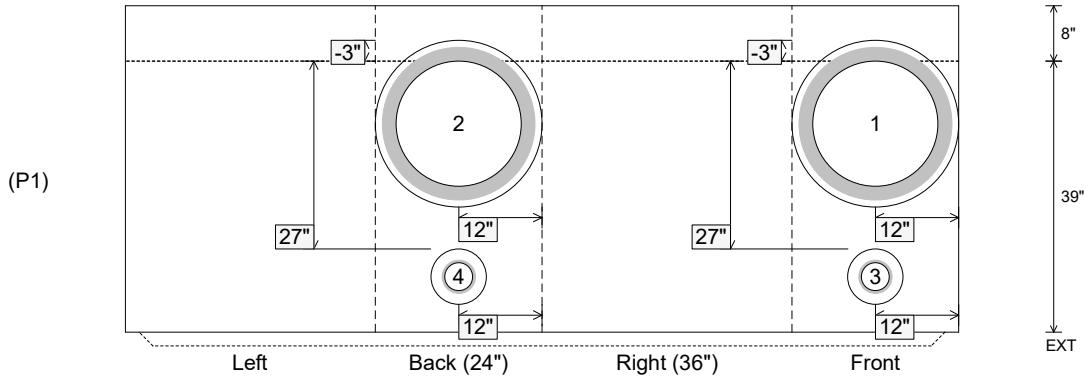

Coating (Int): Coating (Ext):	Seam Up: Tongue Seam Dn: n/a	Wall Thickness: 8" Floor Height: 8"	Height (Int): 39" Height (Ext): 47"	Weight (Net): 4853 lb Volume (Net): 1.24cu.yd

Job Name: 25-3193 - KYTC Kenton Co Call 328 (251320) Job Location: Independence, KY Contractor: Eaton Asphalt	Plant: 100 6/4/2026 4:52:37 PM	Tech: Jared - A PC: J. Jarvis	

Structure ID: 484

P1 BX2436-08BVF BOX BASE 8inW, 8inF, Variable Ht T/n

P4) 24" x 60" - CB INLET KY A 5' TOP LEFT F/G - 10"	1895 lb
P3) 24" x 60" - CB INLET KY A 5' BOTTOM LEFT T/G - 18"	2670 lb
P2) 24" x 36" - BOX RISER 8inW T/G - 24"	2381 lb
P1) 24" x 36" - BOX BASE 8inW, 8inF, Variable Ht T/n - 45"	5606 lb
1) CASTING - HOE KY-206 F/C (KY TY1)	206 lb
1) This Structure Includes a Cast-in Item - KY-206 Frame (Supplied by iCast)	0 lb
2) 24" x 36" - Conseal CS-102 1.00"	0 lb
1) Hole - 18	0 lb
1) Hole - 20	0 lb
2) Hole - 8	0 lb
Structure Total:	12759 lb

Structure Notes:

** KYTC STATE PROJECT **

1. PER KYTC CBI TY A / ASTM C-913 SPECS
2. CONCRETE: 4,000 PSI AT 28 DAYS
3. REINFORCEMENT: #5 BAR @ 12" C.C. E.W. (GRADE 60) - 2" MIN. REBAR CLEARANCE (TYP)
4. NO STORM INVERT
5. NO STEPS
6. KY-206 FRAME & COVER "STORM" SUPPLIED BY ICAST - FRAME TO BE CAST INTO TOP PHASE TOP FLANGE SIDE UP

Rim: 890.66' Rim to Invert: 8.15' Slack: 0.8" Sump: 0" Step Position:

Position	Elev	Angle	Ext. (cw)	Pipe	Pipe OD	Connector	Hole	Horz Size	Up (_)	Offset
Invert 1	882.51'	90°	26"	12" ADS N-12	14.5"	Hole 18	18"	18"	-3"	0"
Invert 2	882.51'	270°	26"	15" ADS N-12	18"	Hole 20	20"	20"	-2.5"	0"
Invert 3										
Invert 4										
Invert 5										
Invert 6										
Invert 7										
Invert 8										

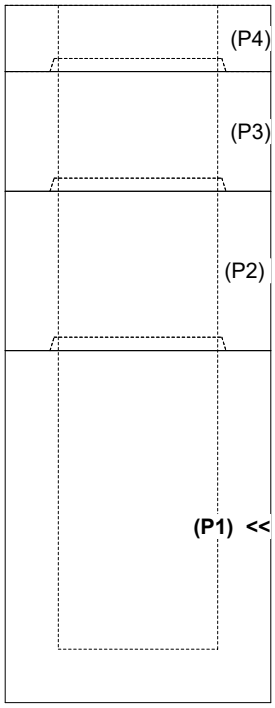

RIGHT-SIDE UP VIEW (int. dimensions)

UPSIDE-DOWN VIEW (int. dimenions)

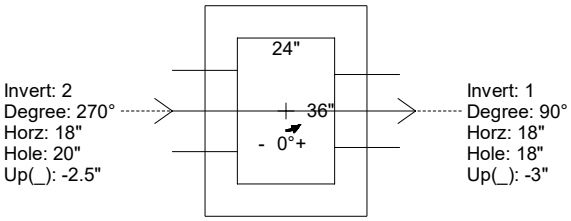

INSIDE WALL DIMENSIONS

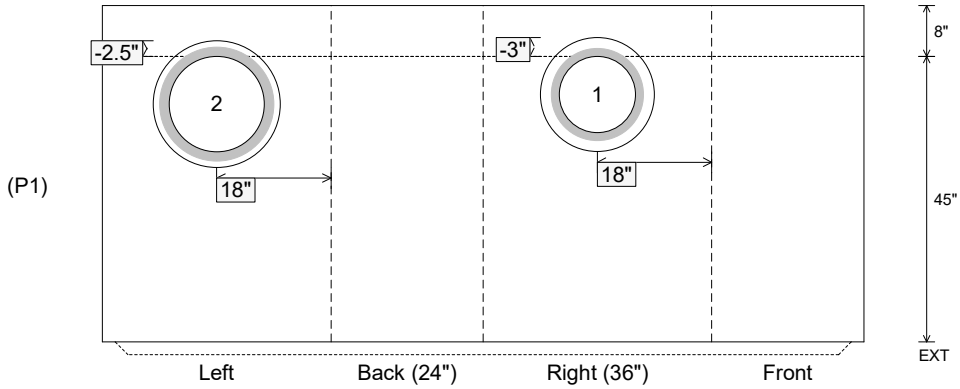

Coating (Int): Coating (Ext):	Seam Up: Tongue Seam Dn: n/a	Wall Thickness: 8" Floor Height: 8"	Height (Int): 45" Height (Ext): 53"	Weight (Net): 5606 lb Volume (Net): 1.43cu.yd

Job Name: 25-3062 Portland Bypass Job Location: Portland, TN Contractor: Scotty's Contracting & Stone, LLC	Plant: Beaver Dam 6/1/2026 8:22:52 AM	Tech: J. Coppage PC: C. Goff	

Structure ID: CB-18

P1 BX4848-08BAVF BOX BASE 8inW, 8inF, Variable Ht

P3) 28" x 34" - CASTING HEIGHT - 7"	0 lb
P2) 48" x 48" - BX FLAT LID 8"W - TDOT 12SB (28"x34" Hole) - 10"	2638 lb
P1) 48" x 48" - BOX BASE 8inW, 8inF, Variable Ht - 39"	7743 lb
1) CASTING - JBS-3123 MODIFIED SET	250 lb
1) 48" x 48" - Conseal CS-102 1.00"	0 lb
1) 28" x 34" - Conseal CS-102 1.00"	0 lb
1) Hole - 40 x 28	0 lb
1) Hole - 32	0 lb
1) Hole - 6	0 lb
Structure Total:	10631 lb

Structure Notes:
1. PER TDOT D-CB-12SB / ASTM C913 SPEC'S.
2. CONCRETE = 4,000 PSI AT 28 DAYS.
3. NO INVERT CHANNEL.
4. JBS 3123 MOD SINGLE SET BY ICAST
5. REINFORCING PER ASTM A615 (GRADE 60).
** SEE TDOT STD DRAWING D-CB-12SB **
- TOP SLAB - DBL MAT #5 BARS.
- WALLS (As .47) #5 BARS AT 8" C.C.E.W.
- FLOOR (As .47) #5 BARS AT 8" C.C.E.W.

Rim: 785.88' Rim to Invert: 4.44' Slack: 0.905" Sump: 3.625" Step Position:

Position	Elev	Angle	Ext. (cw)	Pipe	Pipe OD	Connector	Hole	Horz Size	Up (_)	Offset
Invert 1	781.44'	0°	28"	30" x 19" ELL RCP	37.375" x 26.438"	Hole 40 x 28	40" x 28"	40"	0"	-4"
Invert 2	781.61'	180°	36"	24" RCP B WALL	30"	Hole 32	32"	32"	2.665"	4"
Invert 3	782.88'	180°	11"	4" HDPE (perf pipe)	4.8"	Hole 6	6"	6"	20.505"	-21"
Invert 4										
Invert 5										
Invert 6										
Invert 7										
Invert 8										

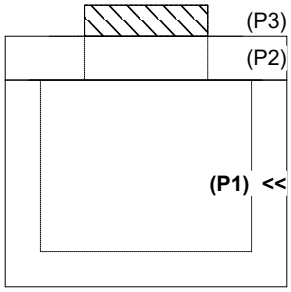

RIGHT-SIDE UP VIEW (int. dimensions)

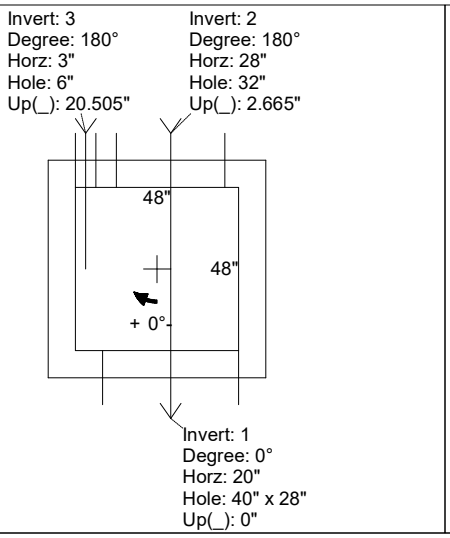

UPSIDE-DOWN VIEW (int. dimenions)

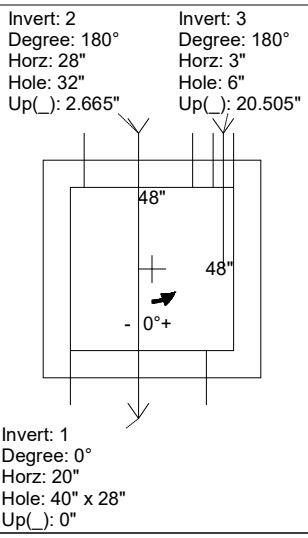

INSIDE WALL DIMENSIONS

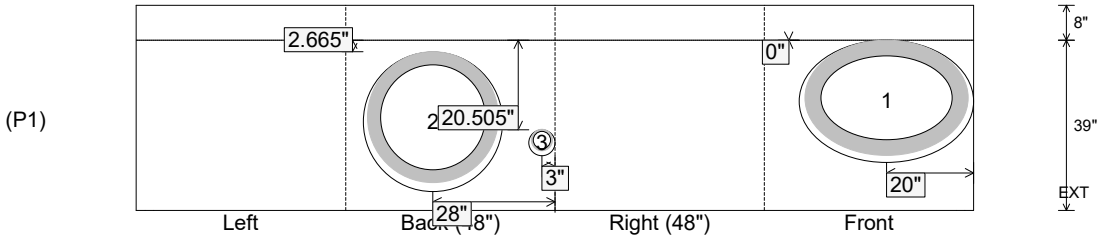

Coating (Int): Coating (Ext):	Seam Up: Flat Seam Dn: n/a	Wall Thickness: 8" Floor Height: 8"	Height (Int): 39" Height (Ext): 47"	Weight (Net): 7743 lb Volume (Net): 1.98cu.yd

Job Name: 25-3062 Portland Bypass Job Location: Portland, TN Contractor: Scotty's Contracting & Stone, LLC	Plant: Beaver Dam 6/1/2026 8:22:36 AM	Tech: J. Coppage PC: C. Goff	

Structure ID: CB-1

P1 BX3648-08BAVF BOX BASE 8inW, 8inF, Variable Ht

P3) 28" x 34" - CASTING HEIGHT - 7"	0 lb
P2) 36" x 48" - BX FLAT LID 8"W - TDOT 12P (28"x34" Hole) - 10"	2044 lb
P1) 36" x 48" - BOX BASE 8inW, 8inF, Variable Ht - 31"	5528 lb
1) CASTING - JBS-3123 MODIFIED SET	250 lb
1) 36" x 48" - Conseal CS-102 1.00"	0 lb
1) 28" x 34" - Conseal CS-102 1.00"	0 lb
1) Hole - 40 x 28	0 lb
1) Hole - 25	0 lb
1) Hole - 6	0 lb
Structure Total:	7822 lb

Structure Notes:
1. PER TDOT D-CB-12S / ASTM C913 SPEC'S.
2. CONCRETE = 4,000 PSI AT 28 DAYS.
3. NO INVERT CHANNEL.
4. JBS 3123 MOD SINGLE SET BY ICAST
5. REINFORCING PER ASTM A615 (GRADE 60).
** SEE TDOT STD DRAWING D-CB-12S **
- TOP SLAB - DBL MAT #5 BARS.
- WALLS (As .47) #5 BARS AT 8" C.C.E.W.
- FLOOR (As .47) #5 BARS AT 8" C.C.E.W.

Rim: 783.27' Rim to Invert: 3.77' Slack: 0.865" Sump: 3.625" Step Position:

Position	Elev	Angle	Ext. (cw)	Pipe	Pipe OD	Connector	Hole	Horz Size	Up (_)	Offset
Invert 1	779.5'	90°	32"	30" x 19" ELL RCP	37.375" x 26.438"	Hole 40 x 28	40" x 28"	40"	0"	0"
Invert 2	779.5'	180°	26"	18" RCP B WALL	23"	Hole 25	25"	25"	1.125"	0"
Invert 3	780.27'	270°	11"	4" HDPE (perf pipe)	4.8"	Hole 6	6"	6"	12.465"	-21"
Invert 4										
Invert 5										
Invert 6										
Invert 7										
Invert 8										

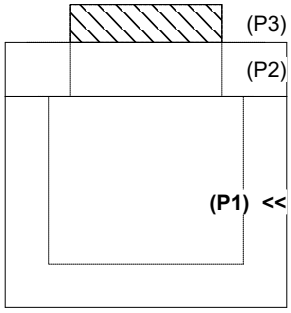

RIGHT-SIDE UP VIEW (int. dimensions)

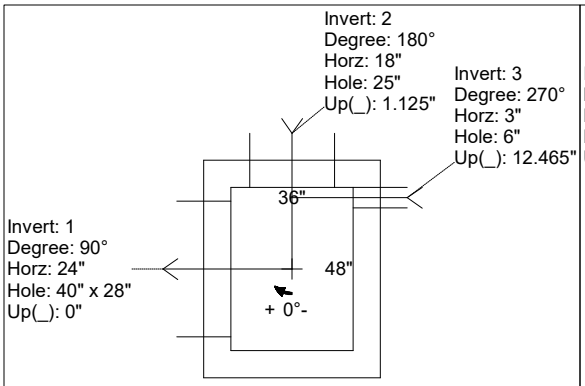

UPSIDE-DOWN VIEW (int. dimenions)

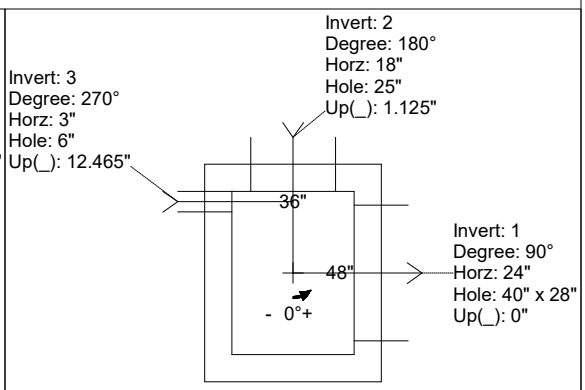

INSIDE WALL DIMENSIONS

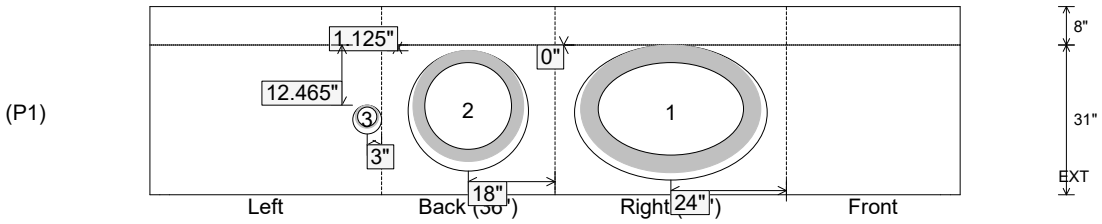

Coating (Int): Coating (Ext):	Seam Up: Flat Seam Dn: n/a	Wall Thickness: 8" Floor Height: 8"	Height (Int): 31" Height (Ext): 39"	Weight (Net): 5528 lb Volume (Net): 1.41cu.yd

Job Name: 25-2952 - KYTC Jefferson Co Call 106 (251315) Job Location: Indiana, KY Contractor: Louisville Paving and Construction	Plant: 100 6/12/2026 3:09:30 PM	Tech: J. Horsley - A PC: J. Jarvis	

Structure ID: 28

P1 BX3636-08BAVF BOX BASE 8inW, 8inF, Variable Ht F/n

P3) 36" x 36" - CASTING (cast in) - 3"	0 lb
P2) 36" x 36" - CB FLAT TOP 8"W SPEC. (KY-328 CAST IN) F/F - 8"	996 lb
P1) 36" x 36" - BOX BASE 8inW, 8inF, Variable Ht F/n - 34"	5318 lb
1) This Structure Includes a Cast-in Item - HOE KY-328 Frame (Supplied By Others)	0 lb
2) 36" x 36" - Conseal CS-102 1.00"	0 lb
1) Hole - 24	0 lb
1) Hole - 20	0 lb
Structure Total:	6314 lb

Structure Notes:

** KYTC STATE PROJECT **

1. PER KYTC DBI TYPE 3 / ASTM C-913 SPECS
2. CONCRETE: 4,000 PSI AT 28 DAYS
3. REINFORCEMENT: #5 BAR @ 12" C.C. E.W. (GRADE 60) - 2" MIN. REBAR CLEARANCE (TYP)
4. HOE KY-328 FRAME & GRATES SUPPLIED BY OTHERS - FRAME TO BE CAST INTO FLAT LID

Rim: 555.8' Rim to Invert: 3.5' Slack: 0" Sump: 0" Step Position:

Position	Elev	Angle	Ext. (cw)	Pipe	Pipe OD	Connector	Hole	Horz Size	Up (_)	Offset
Invert 1	552.3'	180°	26"	18" HDPE	21.2"	Hole 24	24"	24"	-3"	0"
Invert 2	552.3'	270°	26"	15" HDPE	17.6"	Hole 20	20"	20"	-2.5"	0"
Invert 3										
Invert 4										
Invert 5										
Invert 6										
Invert 7										
Invert 8										

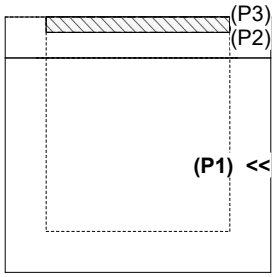

RIGHT-SIDE UP VIEW (int. dimensions)

UPSIDE-DOWN VIEW (int. dimenions)

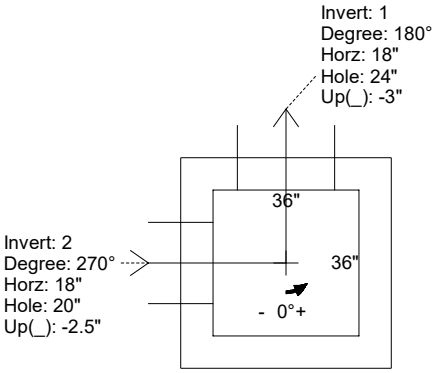

INSIDE WALL DIMENSIONS

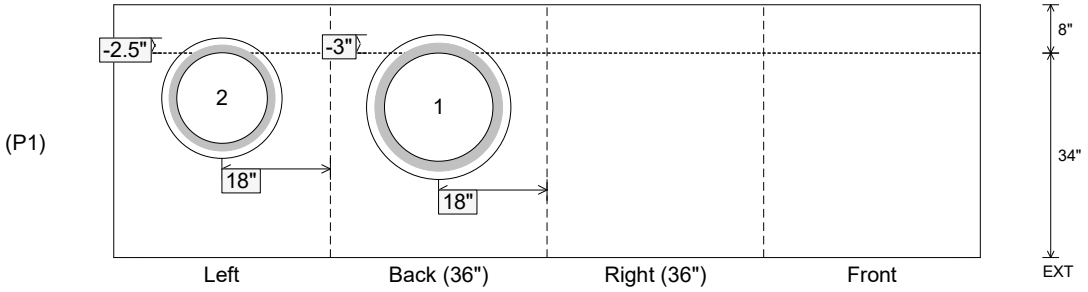

Coating (Int): Coating (Ext):	Seam Up: Flat Seam Dn: n/a	Wall Thickness: 8" Floor Height: 8"	Height (Int): 34" Height (Ext): 42"	Weight (Net): 5318 lb Volume (Net): 1.36cu.yd

Job Name: 25-2952 - KYTC Jefferson Co Call 106 (251315) Job Location: Indiana, KY Contractor: Louisville Paving and Construction	Plant: 100 6/12/2026 3:09:24 PM	Tech: J. Horsley - A PC: J. Jarvis	

Structure ID: 91

P1 BX24300808VF BOX BASE 8inW, 8inF, Variable Ht F/n

P3) 15" x 27" - P.I.P. - BY OTHERS - 8"	0 lb
P2) 24" x 30" - CB FLAT TOP 8"W w/15"x27" HOLE F/F - 8"	963 lb
P1) 24" x 30" - BOX BASE 8inW, 8inF, Variable Ht F/n - 44"	4932 lb
1) 24" x 30" - Conseal CS-102 1.00"	0 lb
1) 15" x 27" - Conseal CS-102 1.00"	0 lb
2) Hole - 20	0 lb
2) Hole - 4	0 lb
Structure Total:	5895 lb

Structure Notes:

** KYTC STATE PROJECT **

1. PER KYTC DBI TYPE 13G / ASTM C-913 SPECS
2. CONCRETE: 4,000 PSI AT 28 DAYS
3. REINFORCEMENT: #5 BAR @ 12" C.C. E.W. (GRADE 60) - 2" MIN. REBAR CLEARANCE (TYP)
4. HOE KY-230G FRAME & GRATE SUPPLIED BY OTHERS - POURED IN PLACE BY OTHERS

Rim: 551.27' Rim to Invert: 5' Slack: 0" Sump: 0" Step Position:

Position	Elev	Angle	Ext. (cw)	Pipe	Pipe OD	Connector	Hole	Horz Size	Up (_)	Offset
Invert 1	546.27'	0°	20"	15" HDPE	17.6"	Hole 20	20"	20"	-2.5"	0"
Invert 2	546.27'	180°	20"	15" HDPE	17.6"	Hole 20	20"	20"	-2.5"	0"
Invert 3	549.27'	90°	23"	4" WEEP HOLE	4"	Hole 4	4"	4"	36"	0"
Invert 4	549.27'	270°	23"	4" WEEP HOLE	4"	Hole 4	4"	4"	36"	0"
Invert 5										
Invert 6										
Invert 7										
Invert 8										

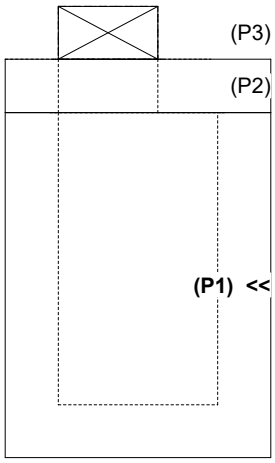

RIGHT-SIDE UP VIEW (int. dimensions)

UPSIDE-DOWN VIEW (int. dimenions)

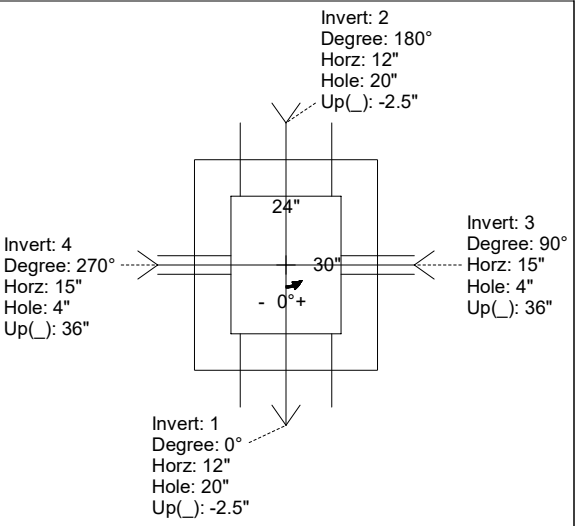

INSIDE WALL DIMENSIONS

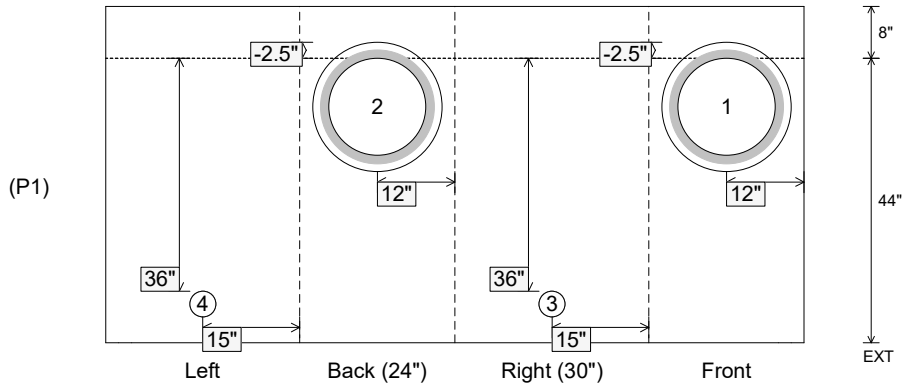

Coating (Int): Coating (Ext):	Seam Up: Flat Seam Dn: n/a	Wall Thickness: 8" Floor Height: 8"	Height (Int): 44" Height (Ext): 52"	Weight (Net): 4932 lb Volume (Net): 1.26cu.yd

Job Name: 25-2952 - KYTC Jefferson Co Call 106 (251315) Job Location: Indiana, KY Contractor: Louisville Paving and Construction	Plant: 100 6/17/2026 5:40:51 PM	Tech: J. Horsley - A PC: J. Jarvis	

Structure ID: 43

P1 BX1818-06BA24 BOX BASE 6inW, 6inF F/n

P2) 18" x 18" - CASTING HEIGHT - 4"	0 lb
P1) 18" x 18" - BOX BASE 6inW, 6inF F/n - 24"	1517 lb
1) 18" x 18" - Conseal CS-102 1.00"	0 lb
1) Hole - 18	0 lb
Structure Total:	1517 lb

Structure Notes:
1. PER MSD YARD DRAIN / ASTM C-913 SPECS
2. CONCRETE: 4,000 PSI AT 28 DAYS
3. REINFORCEMENT: #4 BAR @ 12" C.C. E.W. (GRADE 60) - 2" MIN. REBAR CLEARANCE (TYP)
4. HOE 165-A FRAME & GRATE SUPPLIED BY OTHERS

Rim: 551.98' Rim to Invert: 2.5' Slack: 2" Sump: 0" Step Position:

Position	Elev	Angle	Ext. (cw)	Pipe	Pipe OD	Connector	Hole	Horz Size	Up (_)	Offset
Invert 1	549.48'	0°	15"	12" HDPE	14.5"	Hole 18	18"	18"	-3"	0"
Invert 2										
Invert 3										
Invert 4										
Invert 5										
Invert 6										
Invert 7										
Invert 8										

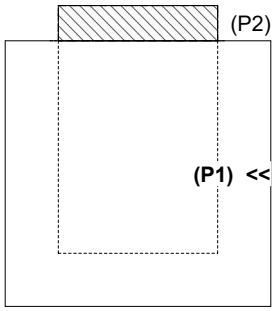

RIGHT-SIDE UP VIEW (int. dimensions)

UPSIDE-DOWN VIEW (int. dimenions)

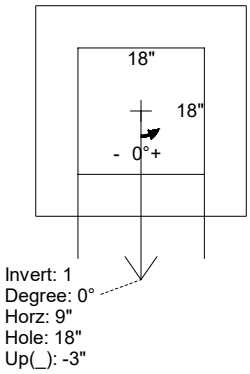

INSIDE WALL DIMENSIONS

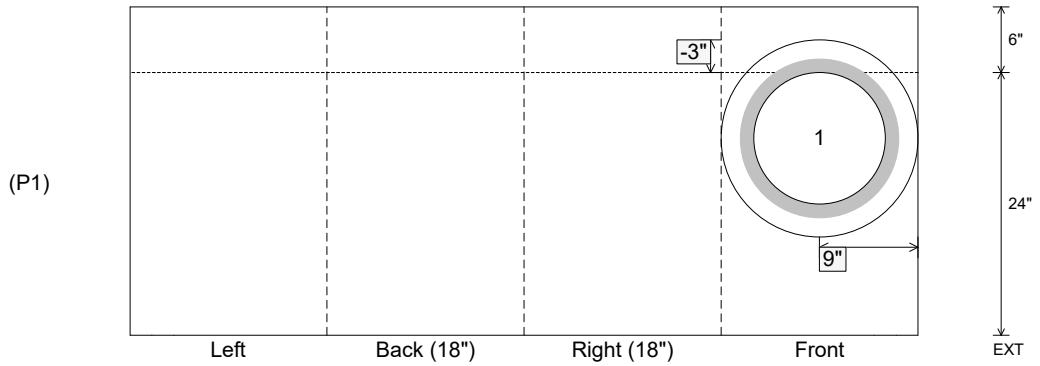

Coating (Int): Coating (Ext):	Seam Up: Flat Seam Dn: n/a	Wall Thickness: 6" Floor Height: 6"	Height (Int): 24" Height (Ext): 30"	Weight (Net): 1517 lb Volume (Net): 0.39cu.yd

Job Name: 26-2030 - KYTC McCracken Co. Call 111 (ID 264505)
Job Location: Paducah, KY
Contractor: Jim Smith Contracting Co, LLC

Plant: 100
6/12/2026 7:49:39 AM

Tech: J. Horsley
PC: J. Jarvis

Structure ID: 148+02 RT S-11 CBIB

P1 BX2424-08BAVF BOX BASE 8inW, 8inF, Variable Ht F/n

P4) 8" x 120" - CB INLET KY B 10' TOP F/G - 9"	1660 lb
P3) 24" x 120" - CB INLET KY B 10' BOTTOM LEFT T/G - 17"	2650 lb
P2) 24" x 24" - FIELD ADJUSTMENT - 3"	0 lb
P1) 24" x 24" - BOX BASE 8inW, 8inF, Variable Ht F/n - 31"	3567 lb
1) CASTING - HOE KY-345 SET (CBI B)	290 lb
1) 24" x 24" - Conseal CS-102 1.00"	0 lb
1) Hole - 18	0 lb
Structure Total:	8167 lb

Structure Notes: .
** KYTC STATE PROJECT **
1. PER KYTC CBI TYPE B / ASTM C913 SPEC'S.
2. CONCRETE = 4,000 PI AT 28 DAYS.
3. CASTING BT ICAST (HOE KY-345 F/G(CBI-B)
.
REINFORCING PER ASTM A615 (GRADE 60).
- TOP PHASE (As .62) #5 BARS AT 6" C.C.E.W.
- WALLS (As .31) #5 BARS AT 12" C.C.E.W.
- FLOOR (As .31) #5 BARS AT 12" C.C.E.W.

Rim: 373.44' Rim to Invert: 5.03' Slack: 0.36" Sump: 0" Step Position:

Position	Elev	Angle	Ext. (cw)	Pipe	Pipe OD	Connector	Hole	Horz Size	Up (_)	Offset
Invert 1	368.41'	90°	20"	15" CMP	16"	Hole 18	18"	18"	-1.5"	0"
Invert 2										
Invert 3										
Invert 4										
Invert 5										
Invert 6										
Invert 7										
Invert 8										

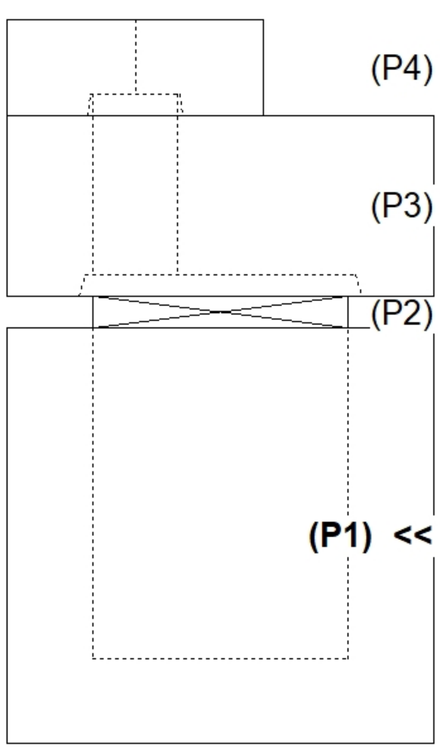

RIGHT-SIDE UP VIEW (int. dimensions)

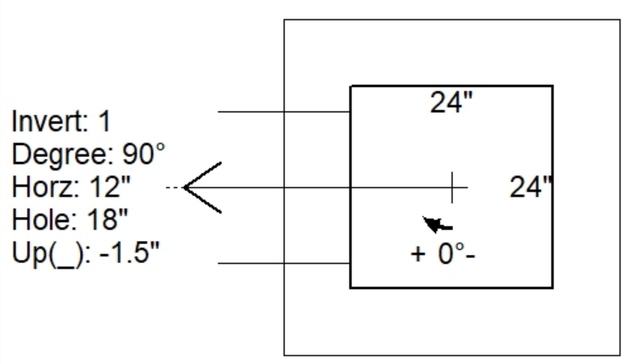

UPSIDE-DOWN VIEW (int. dimenions)

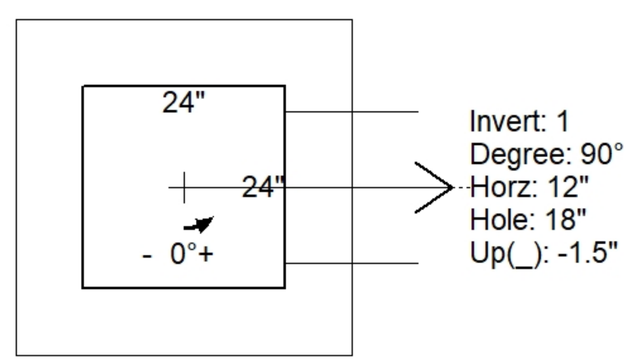

INSIDE WALL DIMENSIONS

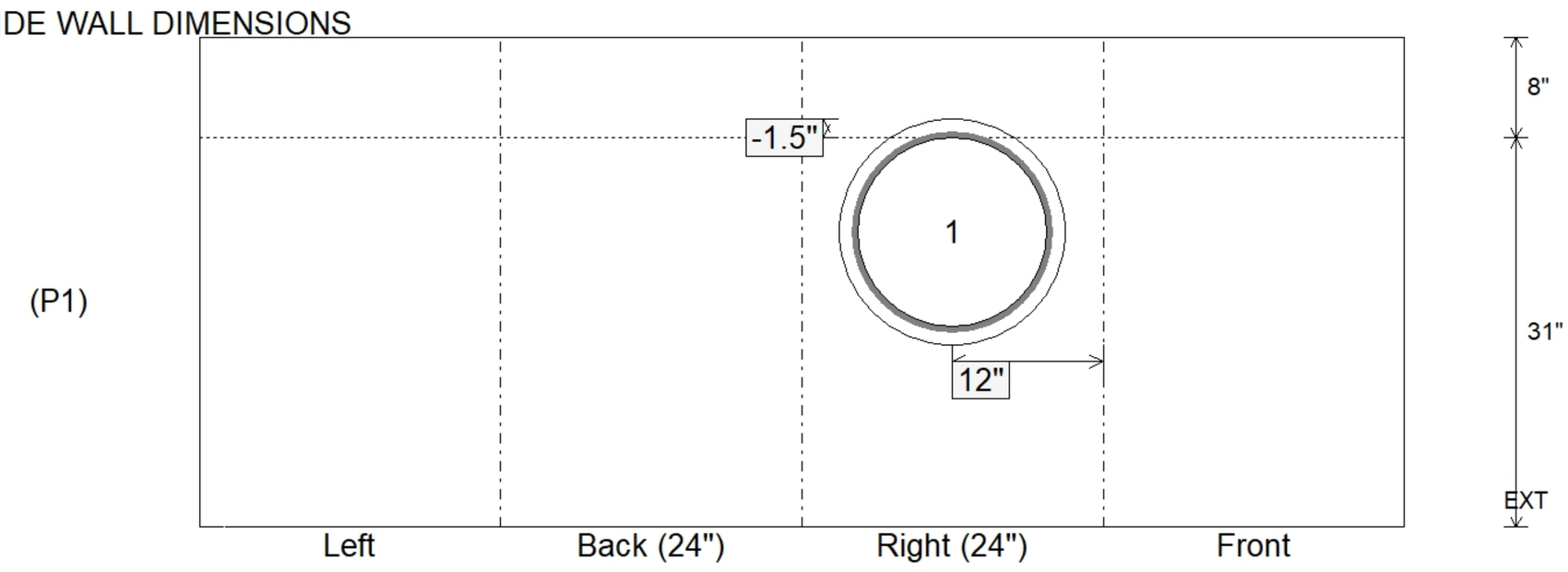

Coating (Int): Coating (Ext):	Seam Up: Flat Seam Dn: n/a	Wall Thickness: 8" Floor Height: 8"	Height (Int): 31" Height (Ext): 39"	Weight (Net): 3567 lb Volume (Net): 0.91cu.yd

Job Name: 26-2030 - KYTC McCracken Co. Call 111 (ID 264505)
Job Location: Paducah, KY
Contractor: Jim Smith Contracting Co, LLC

Plant: 100
6/12/2026 7:49:38 AM

Tech: J. Horsley
PC: J. Jarvis

Structure ID: 148+02 LT S-10 CBIB

P1 BX2424-08BAVF BOX BASE 8inW, 8inF, Variable Ht F/n

P4) 8" x 120" - CB INLET KY B 10' TOP F/G - 9"	1660 lb
P3) 24" x 120" - CB INLET KY B 10' BOTTOM RIGHT T/G - 17"	2650 lb
P2) 24" x 24" - FIELD ADJUSTMENT - 2"	0 lb
P1) 24" x 24" - BOX BASE 8inW, 8inF, Variable Ht F/n - 33"	3568 lb
1) CASTING - HOE KY-345 SET (CBI B)	290 lb
1) 24" x 24" - Conseal CS-102 1.00"	0 lb
2) Hole - 18	0 lb
Structure Total:	8168 lb

Structure Notes: .
** KYTC STATE PROJECT **
1. PER KYTC CBI TYPE B / ASTM C913 SPEC'S.
2. CONCRETE = 4,000 PI AT 28 DAYS.
3. CASTING BT ICAST (HOE KY-345 F/G(CBI-B)
.
REINFORCING PER ASTM A615 (GRADE 60).
- TOP PHASE (As .62) #5 BARS AT 6" C.C.E.W.
- WALLS (As .31) #5 BARS AT 12" C.C.E.W.
- FLOOR (As .31) #5 BARS AT 12" C.C.E.W.

Rim: 373.53' Rim to Invert: 5.13' Slack: 0.56" Sump: 0" Step Position:

Position	Elev	Angle	Ext. (cw)	Pipe	Pipe OD	Connector	Hole	Horz Size	Up (_)	Offset
Invert 1	368.4'	0°	20"	15" CMP	16"	Hole 18	18"	18"	-1.5"	0"
Invert 2	368.4'	270°	20"	15" CMP	16"	Hole 18	18"	18"	-1.5"	0"
Invert 3										
Invert 4										
Invert 5										
Invert 6										
Invert 7										
Invert 8										

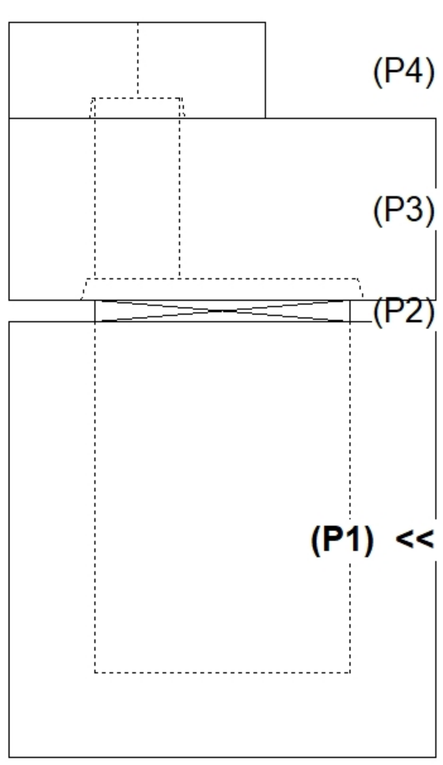

RIGHT-SIDE UP VIEW (int. dimensions)

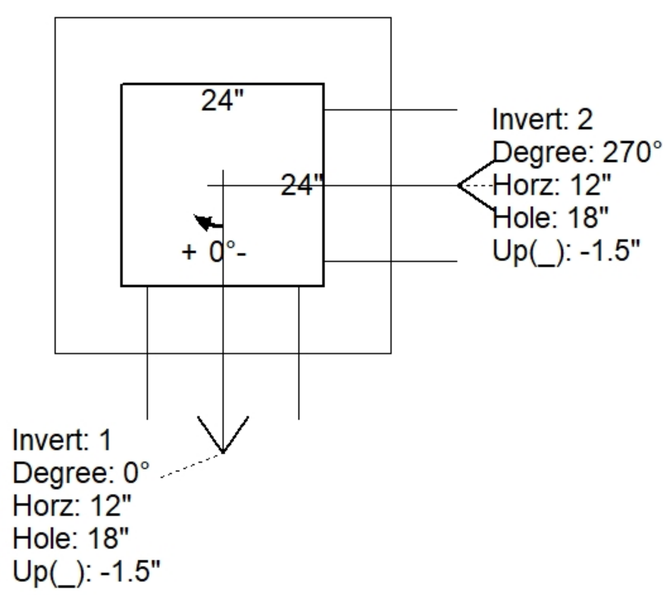

UPSIDE-DOWN VIEW (int. dimenions)

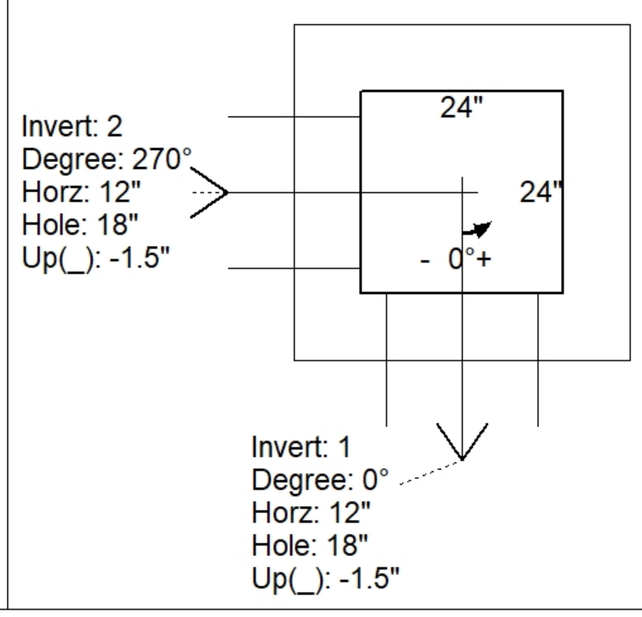

INSIDE WALL DIMENSIONS

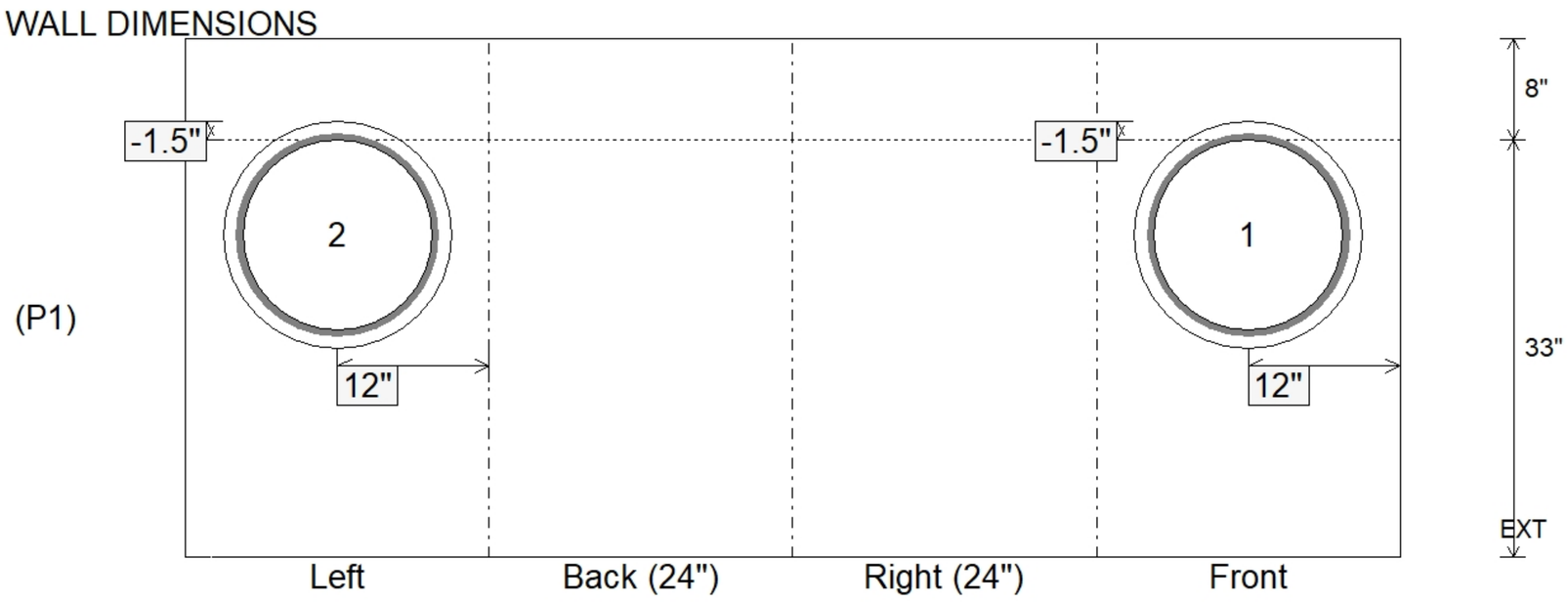

Coating (Int): Coating (Ext):	Seam Up: Flat Seam Dn: n/a	Wall Thickness: 8" Floor Height: 8"	Height (Int): 33" Height (Ext): 41"	Weight (Net): 3568 lb Volume (Net): 0.91cu.yd

Job Name: 26-2104 - Jeffersonville High School Parking Lot Job Location: Jeffersonville, IN Contractor: Mac Construction & Excavating, Inc.	Plant: 100 6/27/2026 5:31:42 PM	Tech: Jared - A PC: T. Lewis	

Structure ID: HW-1 HW

P1 HWSF24 **24" - SLOPED & FLARED HEADWALL F/F**

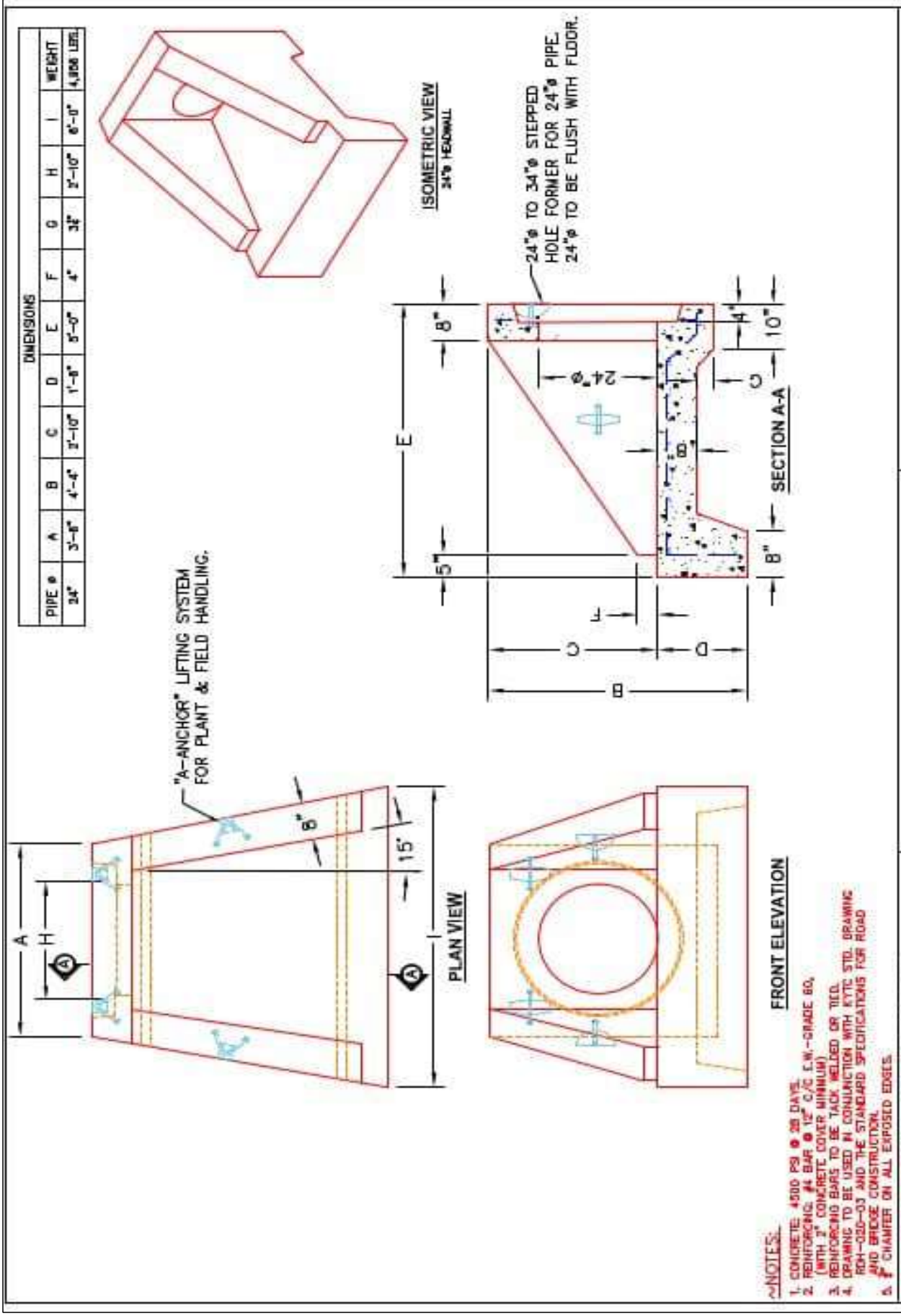

DIMENSIONS												
PIPE ø	A	B	C	D	E	F	G	H	I	WEIGHT
24"	3'-8"	4'-4"	2'-10"	1'-8"	5'-0"	4"	32"	2'-10"	8'-0"	4,956 LBS.

NOTES:
1. CONCRETE: 4500 PSI @ 28 DAYS.
2. REINFORCING: #4 BAR @ 12" C/C (W.-GRADE 60, (WITH 2" CONCRETE COVER MINIMUM)
3. REINFORCING BARS TO BE TACK WELDED OR TIED.
4. DRAWING TO BE USED IN CONJUNCTION WITH KYTC STD. DRAWING RDH-020-03 AND THE STANDARD SPECIFICATIONS FOR ROAD AND BRIDGE CONSTRUCTION.
5. 3/4" CHAMFER ON ALL EXPOSED EDGES.

PRODUCTION WORK ORDER

QUALITY CONTROL CHECKLIST
- ☐ ALL DIMENSIONS CORRECT.
- ☐ LIFTERS INSTALLED.
- ☐ STEPPED HF CORRECT SIZE.
- ☐ REINFORCING CORRECT.
- ☐ DISSIPATOR BLOCK INSTALLED.
- ☐ EDGES CHAMFERED.
- ☐ ALL PATCHWORK ACCEPTABLE.

PRODUCT I.D.: HWSF24	DESCRIPTION: KYTC 24"ø SLOPED & FLARED HEADWALL
PRODUCT VIEW: RIGHT SIDE UP	CUSTOMER: STOCK
PLANT: BEAVER DAM, KY.	PROJECT: STOCK INVENTORY
WEIGHT: 4,956 LBS.	STRUCTURE ID.: N/A
TOP SECTION JOINT: N/A	QUOTE/SALES ORDER NO: N/A
BASE SECTION JOINT: N/A	CHECK: J.H. ROSS, PE / DRAWING: N. RICHARDS
QC CHECK INITIALS:	DATE: REV. 4/22/24 / SCALE: NTS / PG. 1 of 1

THIS DRAWING IS THE PROPERTY OF INFRASTRUCTURE PRECAST, INC. ANY USE OR DUPLICATION OF THIS DRAWING WITHOUT PRIOR AUTHORIZATION IS STRICTLY PROHIBITED.

Job Name: 25-3193 - KYTC Kenton Co Call 328 (251320) Job Location: Independence, KY Contractor: Eaton Asphalt	Plant: 100 6/10/2026 11:59:15 AM	Tech: Jared - A PC: J. Jarvis	

Structure ID: ICAST LI9 (1)

P1 HWPC3453 **53" x 34" - PIPE CULVERT HEADWALL (ELL.RCP) F/F**

GENERAL NOTES:

1. THIS DRAWING TO BE USED IN CONJUNCTION WITH KYTC STANDARD DRAWINGS RDH-110-02, RDH-220-02, RDH-350-03, & STANDARD SPECIFICATIONS FOR ROAD & BRIDGE CONSTRUCTION
2. CONCRETE: 4,500 PSI AT 28 DAYS
3. REINFORCEMENT: #5 BAR @ 12" C.C. E.W. (GRADE 60) - 2" MIN. REBAR CLEARANCE (TYP)
   - SEE PG. 2 OF 3 FOR REBAR LAYOUTS
   - SEE PG. 3 OF 3 FOR REBAR CUTSHEET & DETAILS
4. REINFORCING BARS TO BE TACK WELDED OR TIED
5. ¾" CHAMFER REQUIRED ON ALL EXPOSED EDGES
6. PIPE & LIFTING ANCHOR POCKETS TO BE GROUTED BY CONTRACTOR
7. WEIGHT: 16,225 LBS

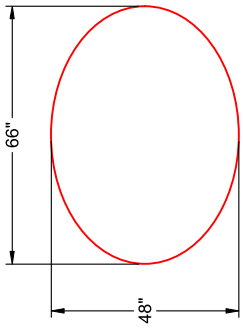

OPENING FOR 34" X 53" HERCP

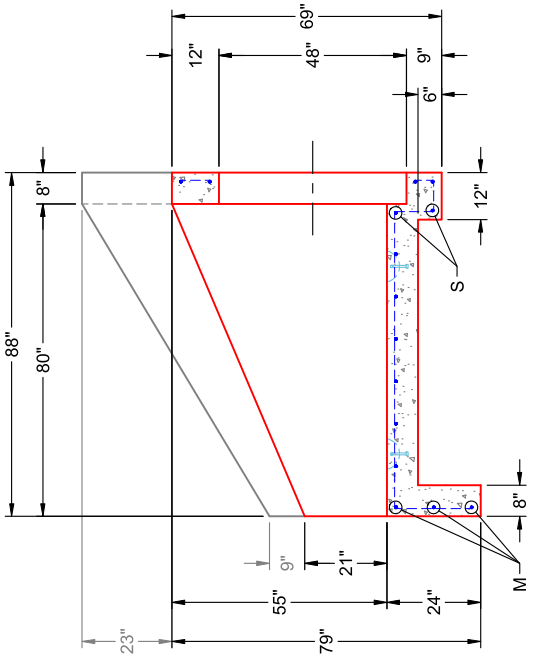

SECTION A-A
(RIGHT SIDE UP)

PG. 1 OF 3

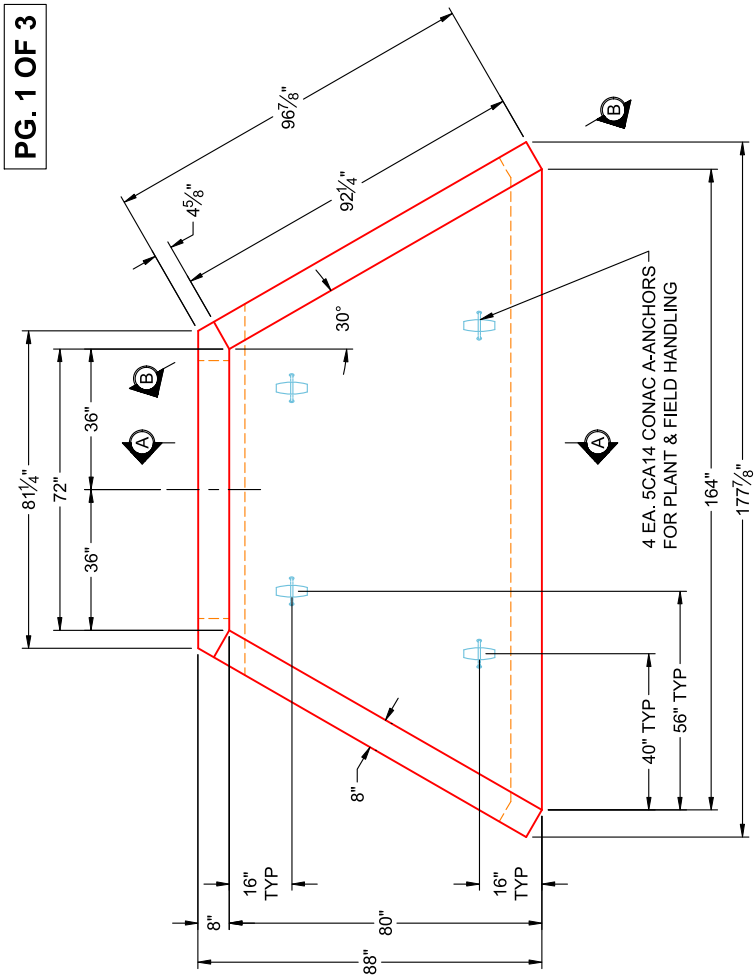

TOP VIEW
(RIGHT SIDE UP)

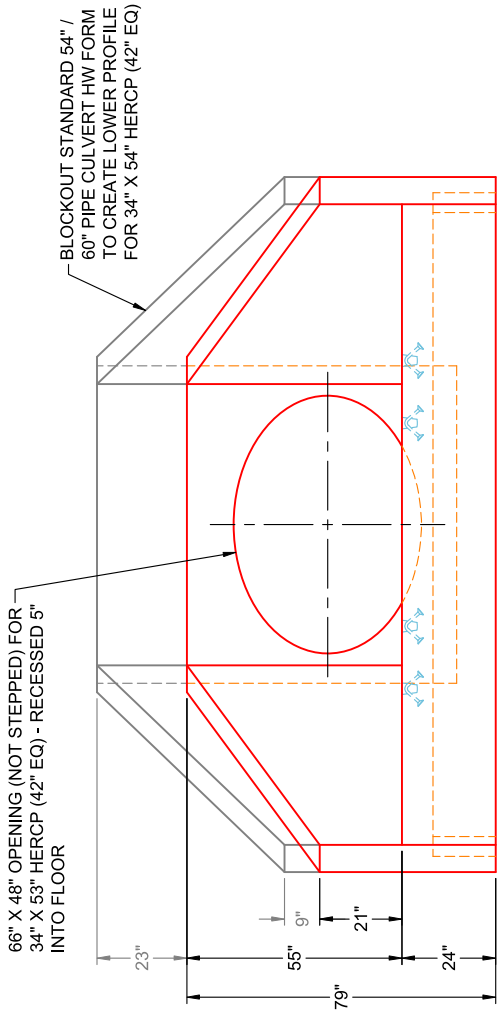

FRONT VIEW
(RIGHT SIDE UP)

Job Name: 25-3193 - KYTC Kenton Co Call 328 (251320) Job Location: Independence, KY Contractor: Eaton Asphalt	Plant: 100 6/10/2026 11:59:15 AM	Tech: Jared - A PC: J. Jarvis	

Structure ID: ICAST LI9 (1)

P1 HWPC3453 **53" x 34" - PIPE CULVERT HEADWALL (ELL.RCP) F/F**

GENERAL NOTES:

1. THIS DRAWING TO BE USED IN CONJUNCTION WITH KYTC STANDARD DRAWINGS RDH-110-02, RDH-220-02, RDH-350-03, & STANDARD SPECIFICATIONS FOR ROAD & BRIDGE CONSTRUCTION
2. CONCRETE: 4,500 PSI AT 28 DAYS
3. REINFORCEMENT: #5 BAR @ 12" C.C. E.W. (GRADE 60) - 2" MIN. REBAR CLEARANCE (TYP)
   - SEE PG. 1 OF 3 FOR HEADWALL DIMENSIONS
   - SEE PG. 3 OF 3 FOR REBAR CUTSHEET & DETAILS
4. REINFORCING BARS TO BE TACK WELDED OR TIED
5. ¾" CHAMFER REQUIRED ON ALL EXPOSED EDGES
6. PIPE & LIFTING ANCHOR POCKETS TO BE GROUTED BY CONTRACTOR
7. WEIGHT: 16,225 LBS

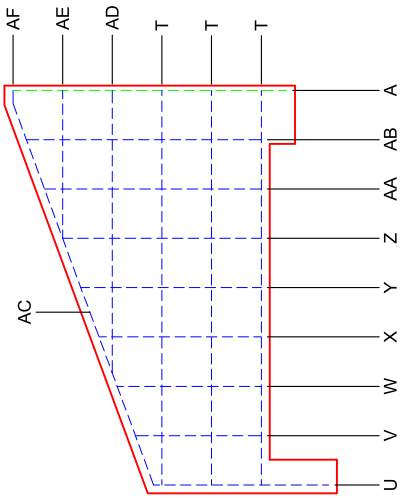

SECTION B-B
(RIGHT SIDE UP)

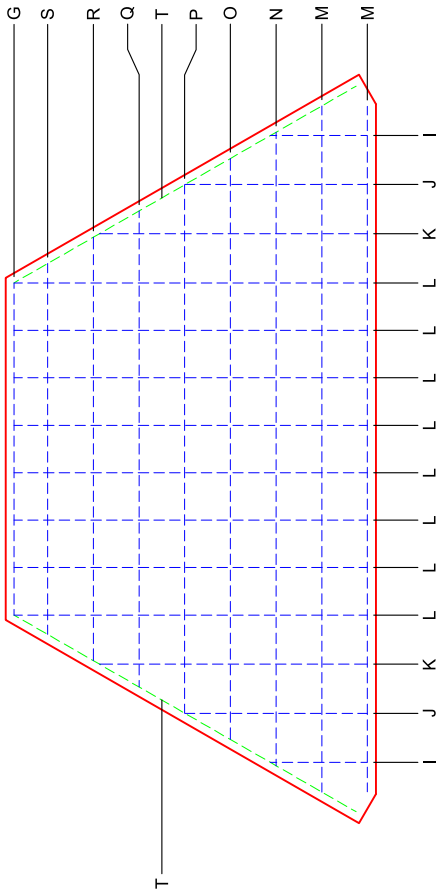

SECTION C-C
(RIGHT SIDE UP)

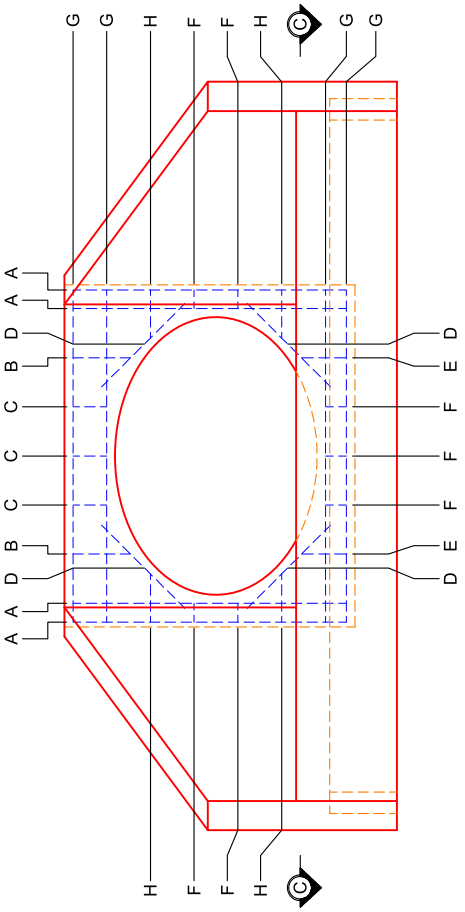

FRONT VIEW
(RIGHT SIDE UP)

Job Name: 25-3193 - KYTC Kenton Co Call 328 (251320)
Job Location: Independence, KY
Contractor: Eaton Asphalt

Plant: 100
6/10/2026 11:59:15 AM

Tech: Jared - A
PC: J. Jarvis

Structure ID: ICAST LI9 (1)

P1 HWPC3453 53" x 34" - PIPE CULVERT HEADWALL (ELL.RCP) F/F

ITEM #	LENGTH	SIZE	QTY
A	65"	#5	4
B	14"	#5	2
C	8"	#5	3
D	28"	#5	4
E	11"	#5	2
F	5"	#5	7
G	79"	#5	5
H	12"	#5	4
I	23"	#5	2
J	44"	#5	2
K	64"	#5	2
L	SEE DETAIL	#5	8
M	163"	#5	4
N	151"	#5	1
O	138"	#5	1
P	126"	#5	1

ITEM #	LENGTH	SIZE	QTY
Q	114"	#5	1
R	101"	#5	1
S	82"	#5	2
T	94"	#5	6
U	42"	#5	2
V	30"	#5	2
W	35"	#5	2
X	39"	#5	2
Y	43"	#5	2
Z	48"	#5	2
AA	52"	#5	2
AB	56"	#5	2
AC	97"	#5	2
AD	68"	#5	2
AE	36"	#5	2
AF	4"	#5	2

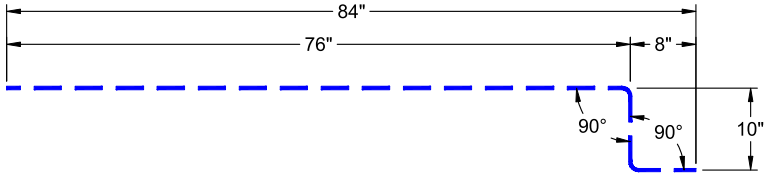

REBAR PIECE "L"
#5 REBAR
TOTAL LENGTH: 94"
QTY: 8

Job Name: 26-1843 - Dutch Bros Coffee Job Location: Paducah, KY 42003 Contractor: Ainsworth Land Development, LLC	Plant: 100 6/24/2026 11:45:59 AM	Tech: Jared - A PC: T. Lewis	

Structure ID: 102 HW

P1 HWSF12 12" - SLOPED & FLARED HEADWALL F/F

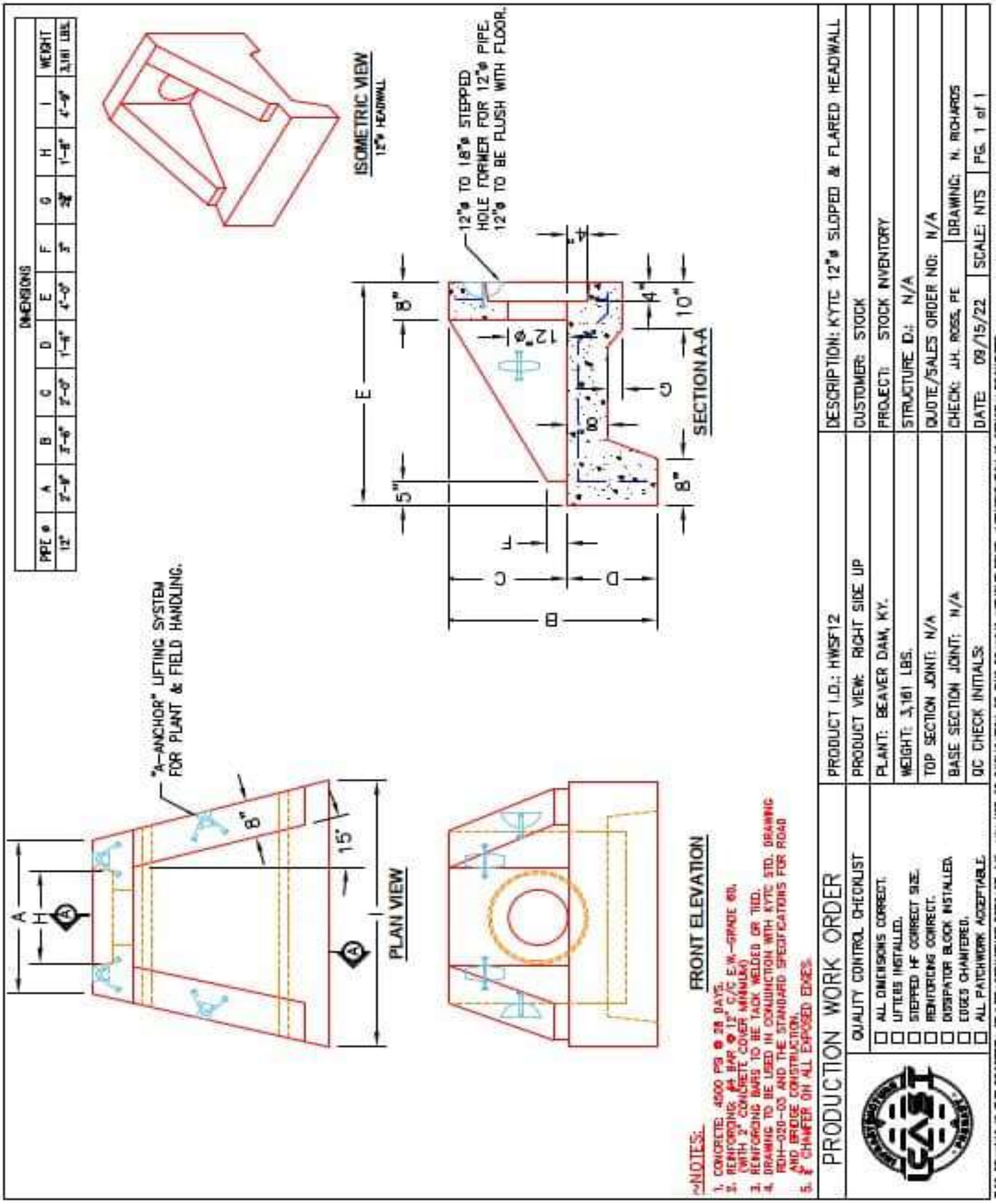

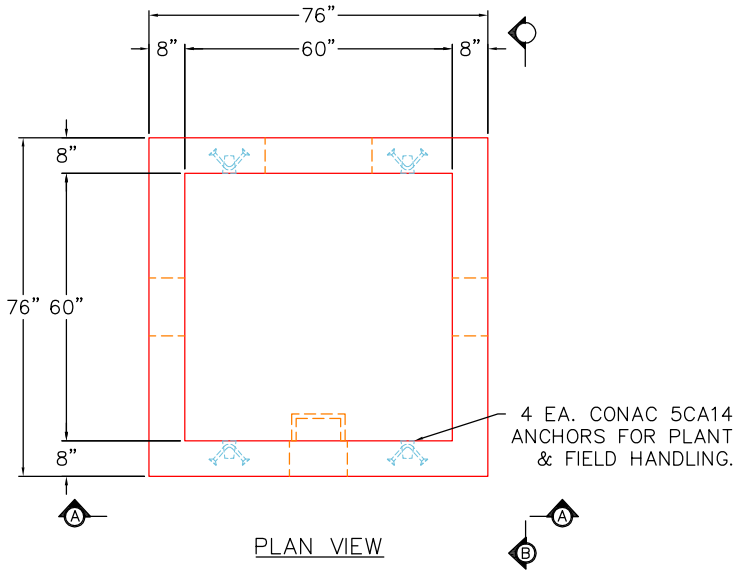

PLAN VIEW

GENERAL NOTES:

1. MANUFACTURED TO ASTM C–913 (LATEST REVISION).
2. CONCRETE: 4,000 PSI AT 28 DAYS. CONCRETE.
3. REINFORCING: PER ASTM A615 (GRADE 60).
   WALLS/FLOOR: #5 BAR @ 12” C.C.E.W.
4. WEIGHTS: TOTAL = 12,654 LBS
   FIRST POUR = 3,874 LBS
   SECOND POUR = 8,780 LBS
5. JOINT TO BE SEALED W/ CS–102 SEALANT

FIRST POUR DRAWING

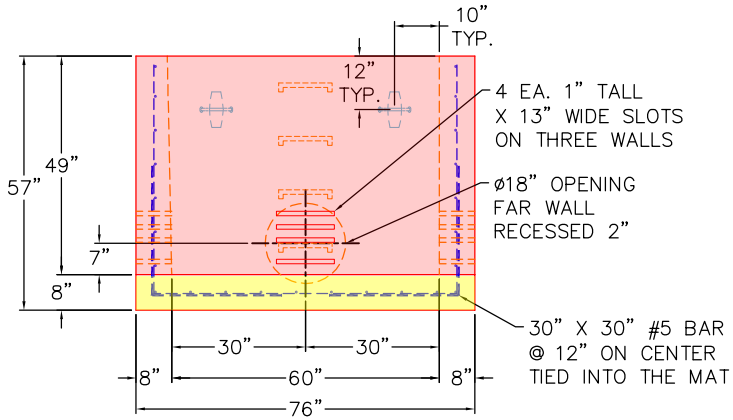

SECTION A–A

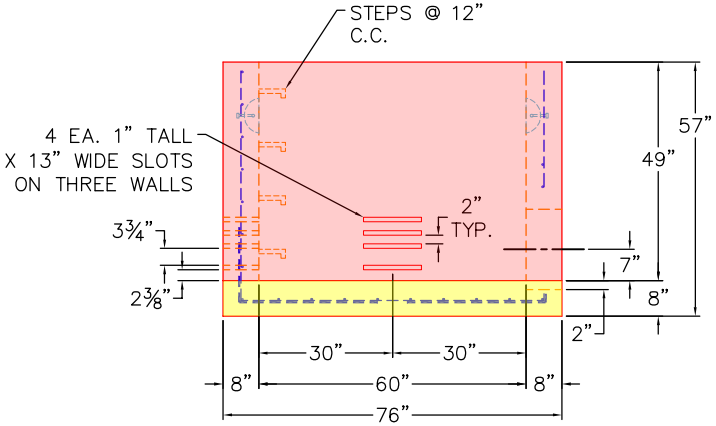

SECTION B–B

PRODUCTION WORK ORDER	PRODUCT I.D.: BX6060–08BAVF	DESCRIPTION: 60” X 60” X 49” TALL BOX BASE	
QUALITY CONTROL CHECKLIST	PRODUCT VIEW: RIGHT SIDE UP	CUSTOMER: BUZICK CONSTRUCTION	
☐ ALL DIMENSIONS CORRECT.	PLANT: BEAVER DAM, KY.	PROJECT: BUFFALO TRACE	
☐ LIFTERS INSTALLED.	WEIGHT: 12,654 LBS.	STRUCTURE: SEDIMENT BASIN 1A	
☐ OPENING CORRECT LOCATION.	TOP SECTION JOINT: N/A	ORDER NO: 26–1651B	
☐ REINFORCING CORRECT.	BASE SECTION JOINT: N/A	PC: E. BRADLEY	DRAWING: S. FELLETTER
☐ SURFACE QUALITY ACCEPTABLE.	QC CHECK INITIALS:	DATE: 06/26/26	SCALE: NTS / PG. 1 of 1
☐ EDGES CHAMFERED.			
☐ ALL PATCHWORK ACCEPTABLE.			

THIS DRAWING IS THE PROPERTY OF INFRASTRUCTURE PRECAST, INC. ANY USE OR DUPLICATION OF THIS DRAWING WITHOUT PRIOR AUTHORIZATION IS STRICTLY PROHIBITED.

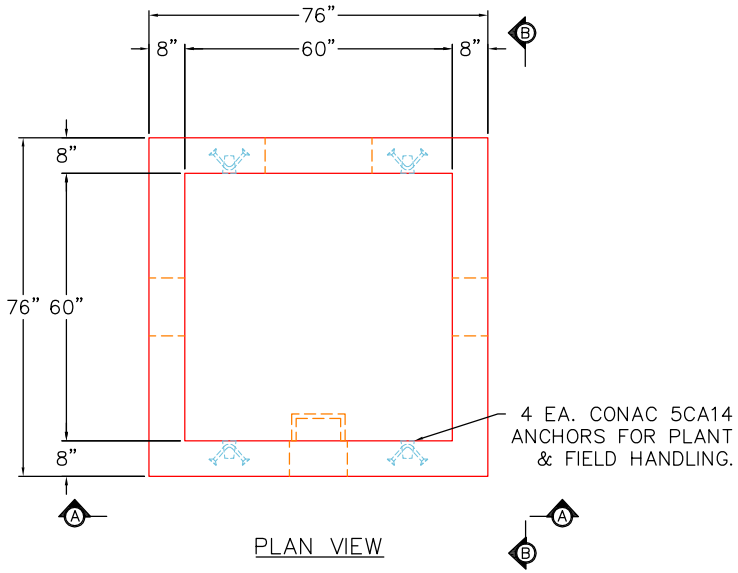

PLAN VIEW

GENERAL NOTES:

1. MANUFACTURED TO ASTM C-913 (LATEST REVISION).
2. CONCRETE: 4,000 PSI AT 28 DAYS. CONCRETE.
3. REINFORCING: PER ASTM A615 (GRADE 60).
   WALLS/FLOOR: #5 BAR @ 12" C.C.E.W.
4. WEIGHTS: TOTAL = 12,654 LBS
   FIRST POUR = 3,874 LBS
   SECOND POUR = 8,780 LBS
5. JOINT TO BE SEALED W/ CS-102 SEALANT

SECOND POUR DRAWING

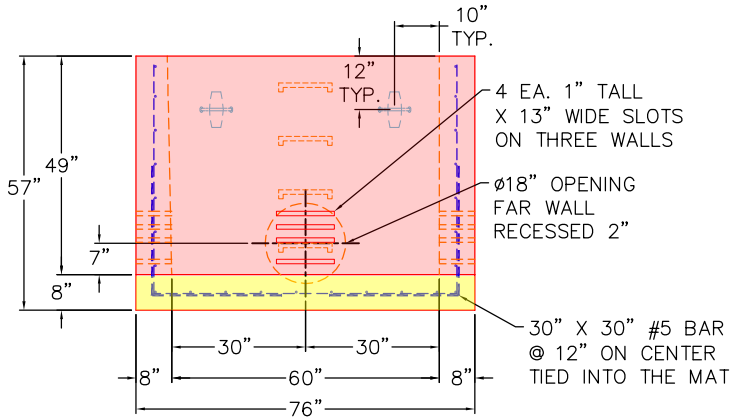

SECTION A-A

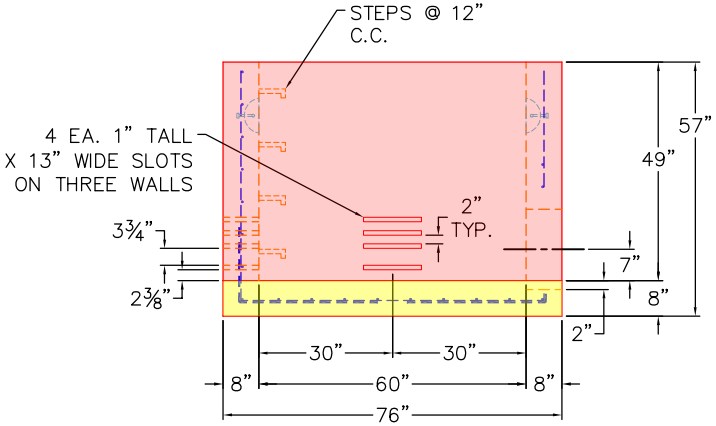

SECTION B-B

PRODUCTION WORK ORDER	PRODUCT I.D.: BX6060-08BAVF	DESCRIPTION: 60" X 60" X 49" TALL BOX BASE	
QUALITY CONTROL CHECKLIST	PRODUCT VIEW: RIGHT SIDE UP	CUSTOMER: BUZICK CONSTRUCTION	
☐ ALL DIMENSIONS CORRECT.	PLANT: BEAVER DAM, KY.	PROJECT: BUFFALO TRACE	
☐ LIFTERS INSTALLED.	WEIGHT: 12,654 LBS.	STRUCTURE: SEDIMENT BASIN 1A	
☐ OPENING CORRECT LOCATION.	TOP SECTION JOINT: N/A	ORDER NO: 26-1651B	
☐ REINFORCING CORRECT.	BASE SECTION JOINT: N/A	PC: E. BRADLEY	DRAWING: S. FELLETTER
☐ SURFACE QUALITY ACCEPTABLE.	QC CHECK INITIALS:	DATE: 06/26/26	SCALE: NTS / PG. 1 of 1
☐ EDGES CHAMFERED.			
☐ ALL PATCHWORK ACCEPTABLE.			

THIS DRAWING IS THE PROPERTY OF INFRASTRUCTURE PRECAST, INC. ANY USE OR DUPLICATION OF THIS DRAWING WITHOUT PRIOR AUTHORIZATION IS STRICTLY PROHIBITED.

GENERAL NOTES:

1. MANUFACTURED TO ASTM C-913 (LATEST REVISION).
2. CONCRETE: 4,000 PSI AT 28 DAYS. CONCRETE.
3. REINFORCING: PER ASTM A615 (GRADE 60).
   TOP SLAB: #5 BAR @ 6" C.C.E.W.
4. WEIGHT = 3,101 LBS
5. CASTING BY ICAST (HOE 595 F/G).
5. JOINT TO BE SEALED W/ CS-102 SEALANT

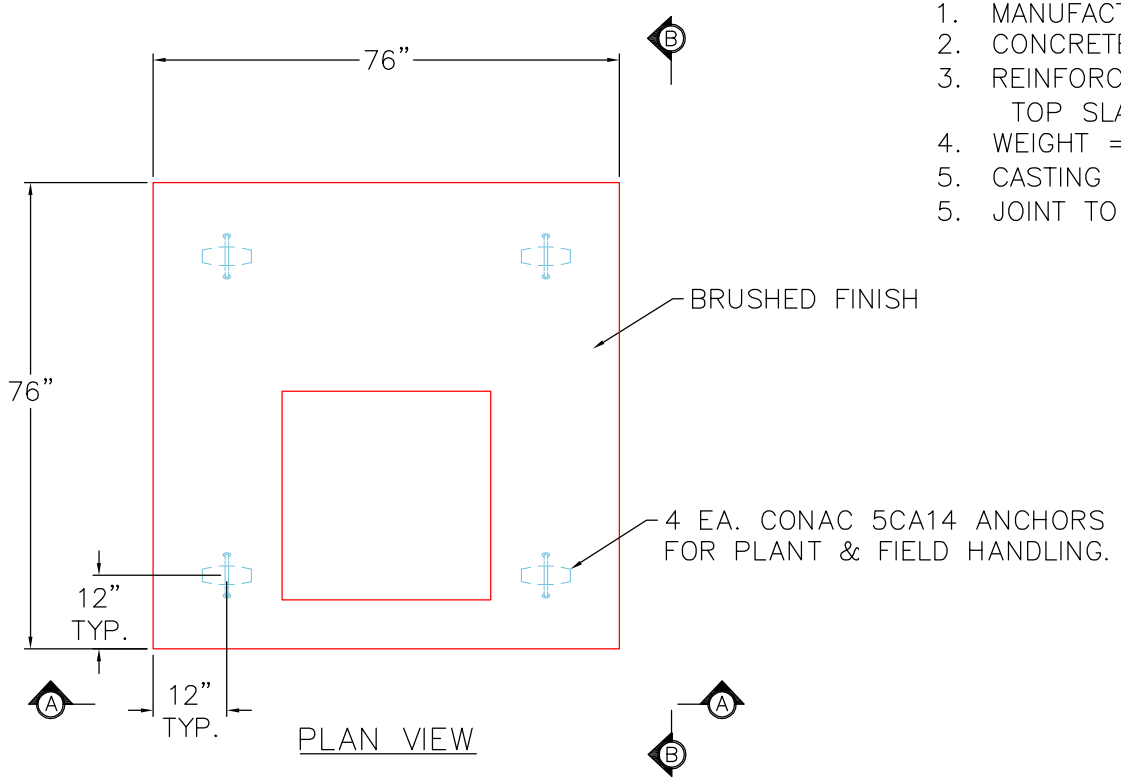

PLAN VIEW

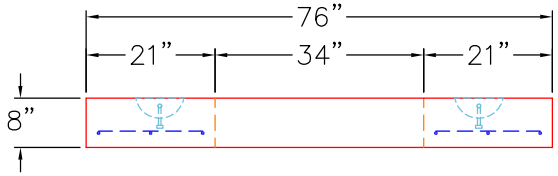

SECTION A-A

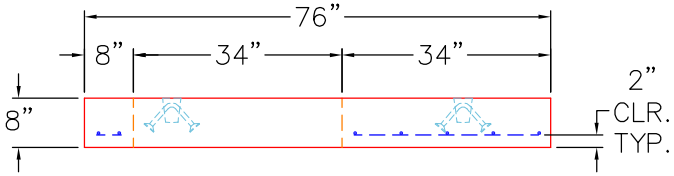

SECTION B-B

PRODUCTION WORK ORDER	PRODUCT I.D.: BX060060-08LD08-S	DESCRIPTION: 60" X 60" X 8" BOX FLAT LID	
QUALITY CONTROL CHECKLIST	PRODUCT VIEW: RIGHT SIDE UP	CUSTOMER: BUZICK CONSTRUCTION	
☐ ALL DIMENSIONS CORRECT.	PLANT: BEAVER DAM, KY.	PROJECT: BUFFALO TRACE	
☐ LIFTERS INSTALLED.	WEIGHT: 3,101 LBS.	STRUCTURE: SEDIMENT BASIN 1A	
☐ HATCH INSTALLED CORRECT.	TOP SECTION JOINT: N/A	ORDER NO: 26-1651B	
☐ REINFORCING CORRECT.	BASE SECTION JOINT: N/A	PC: E. BRADLEY	DRAWING: S. FELLETTER
☐ SURFACE QUALITY ACCEPTABLE.	QC CHECK INITIALS:	DATE: 06/26/26	SCALE: NTS / PG. 1 of 1
☐ EDGES CHAMFERED.			
☐ ALL PATCHWORK ACCEPTABLE.			

THIS DRAWING IS THE PROPERTY OF INFRASTRUCTURE PRECAST, INC. ANY USE OR DUPLICATION OF THIS DRAWING WITHOUT PRIOR AUTHORIZATION IS STRICTLY PROHIBITED.

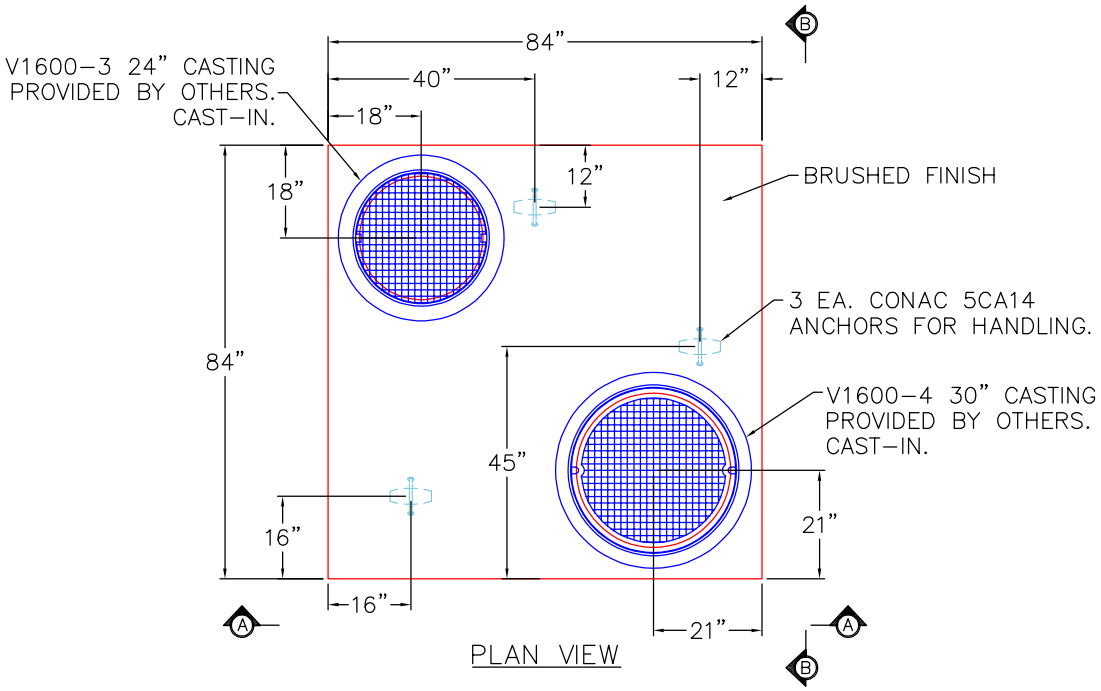

PLAN VIEW

GENERAL NOTES:

1. MANUFACTURED TO ASTM C–913 (LATEST REVISION).
2. CONCRETE: 5,000 PSI AT 28 DAYS. CONCRETE.
3. REINFORCING: PER ASTM A615 (GRADE 60).
   – TOP SLAB (As .62) #5 BARS AT 6” C.C.E.W.
4. WEIGHT = 3,959 LBS
5. CASTINGS PROVIDED BY OTHERS (EJ V1600–3 & V1600–4 F/C). TO BE CAST–IN TOP SLAB.
6. VAULT JOINT TO BE SEALED WITH CONCRETE SEALANTS, INC. CS–102 ROLL BUTYL MASTIC. (SUPPLIED BY ICAST).

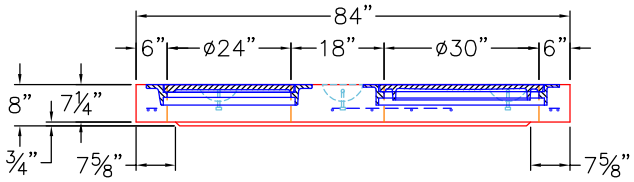

SECTION A–A

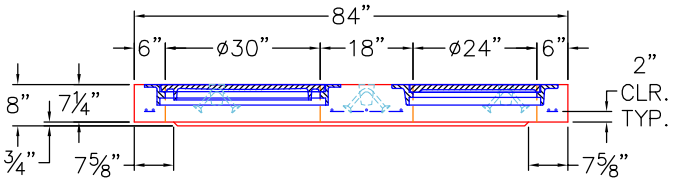

SECTION B–B

PRODUCTION WORK ORDER	PRODUCT I.D.: BX072072–06LD08S	DESCRIPTION: 84” X 84” X 7 ¼” VAULT TOP SLAB	
QUALITY CONTROL CHECKLIST	PRODUCT VIEW: RIGHT SIDE UP	CUSTOMER: CONTECH ENGINEERING SOLUTIONS	
☐ ALL DIMENSIONS CORRECT.	PLANT: BEAVER DAM, KY.	PROJECT: 868959 COOK OUT	
☐ LIFTERS INSTALLED.	WEIGHT: 3,959 LBS.	STRUCTURE: 10–KFPD0606	
☐ HATCH INSTALLED CORRECT.	TOP SECTION JOINT: N/A	ORDER NO: 26–2789	
☐ REINFORCING CORRECT.	BASE SECTION JOINT: N/A	PC: C. GOFF	DRAWING: S. FELLETTER
☐ SURFACE QUALITY ACCEPTABLE.	QC CHECK INITIALS:	DATE: 06/25/26	SCALE: NTS / PG. 1 of 1
☐ EDGES CHAMFERED.			
☐ ALL PATCHWORK ACCEPTABLE.			

THIS DRAWING IS THE PROPERTY OF INFRASTRUCTURE PRECAST, INC. ANY USE OR DUPLICATION OF THIS DRAWING WITHOUT PRIOR AUTHORIZATION IS STRICTLY PROHIBITED.

Job Name: 25-3062 Portland Bypass Job Location: Portland, TN Contractor: Scotty's Contracting & Stone, LLC	Plant: Beaver Dam 6/1/2026 8:22:45 AM	Tech: J. Coppage PC: C. Goff	

Structure ID: CB-11

P1 BX3232-08BAVF BOX BASE 8inW, 8inF, Variable Ht

P2) 32" x 32" - CASTING HEIGHT - 7"	0 lb
P1) 32" x 32" - BOX BASE 8inW, 8inF, Variable Ht - 41"	5443 lb
1) CASTING - JBS-3123 MODIFIED SET	250 lb
1) 32" x 32" - Conseal CS-102 1.00"	0 lb
2) Hole - 26	0 lb
1) Hole - 6	0 lb

Structure Total:	5693 lb

Structure Notes:
1. PER TDOT D-CB-12LP / ASTM C913 SPEC'S.
2. CONCRETE = 4,000 PSI AT 28 DAYS.
3. NO INVERT CHANNEL.
4. JBS 3123 MOD SINGLE SET BY ICAST
5. REINFORCING PER ASTM A615 (GRADE 60).
- WALLS (As .62) #5 BARS AT 6" C.C.E.W.
- FLOOR (As .62) #5 BARS AT 6" C.C.E.W.

Rim: 804.91' Rim to Invert: 3.84' Slack: 0.58" Sump: 2.5" Step Position:

Position	Elev	Angle	Ext. (cw)	Pipe	Pipe OD	Connector	Hole	Horz Size	Up (_)	Offset
Invert 1	801.07'	0°	27"	18" RCP B WALL	23"	Hole 26	26"	26"	0"	3"
Invert 2	801.11'	180°	21"	18" RCP B WALL	23"	Hole 26	26"	26"	0.48"	-3"
Invert 3	802.41'	180°	37"	4" HDPE (perf pipe)	4.8"	Hole 6	6"	6"	18.18"	13"
Invert 4										
Invert 5										
Invert 6										
Invert 7										
Invert 8										

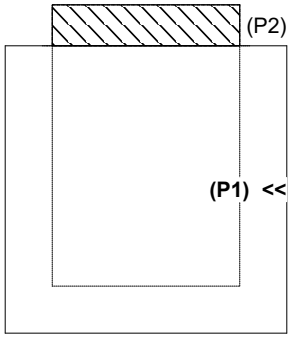

RIGHT-SIDE UP VIEW (int. dimensions)

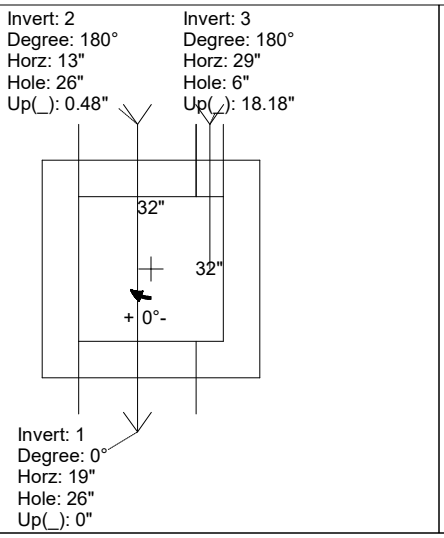

UPSIDE-DOWN VIEW (int. dimenions)

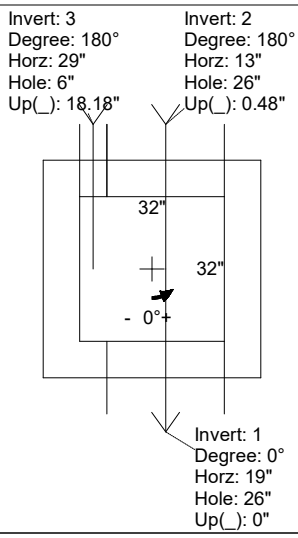

INSIDE WALL DIMENSIONS

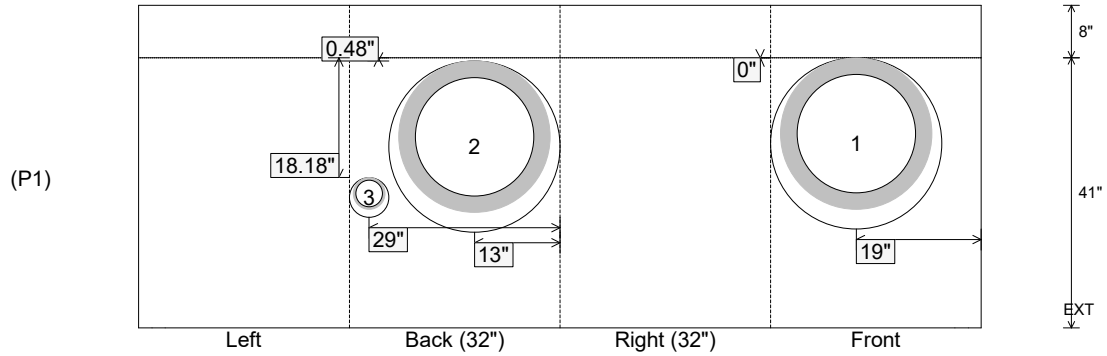

Coating (Int): Coating (Ext):	Seam Up: Flat Seam Dn: n/a	Wall Thickness: 8" Floor Height: 8"	Height (Int): 41" Height (Ext): 49"	Weight (Net): 5443 lb Volume (Net): 1.39cu.yd

Job Name: 25-3062 Portland Bypass Job Location: Portland, TN Contractor: Scotty's Contracting & Stone, LLC	Plant: Beaver Dam 6/1/2026 8:22:40 AM	Tech: J. Coppage PC: C. Goff	

Structure ID: CB-4

P1 BX3232-08BAVF BOX BASE 8inW, 8inF, Variable Ht

P2) 32" x 32" - CASTING HEIGHT - 7"	0 lb
P1) 32" x 32" - BOX BASE 8inW, 8inF, Variable Ht - 41"	5580 lb
1) CASTING - JBS-3123 MODIFIED SET	250 lb
1) 32" x 32" - Conseal CS-102 1.00"	0 lb
1) Hole - 26	0 lb
1) Hole - 6	0 lb

Structure Total:	5830 lb

Structure Notes:
1. PER TDOT D-CB-12LP / ASTM C913 SPEC'S.
2. CONCRETE = 4,000 PSI AT 28 DAYS.
3. NO INVERT CHANNEL.
4. JBS 3123 MOD SINGLE SET BY ICAST
5. REINFORCING PER ASTM A615 (GRADE 60).
- WALLS (As .62) #5 BARS AT 6" C.C.E.W.
- FLOOR (As .62) #5 BARS AT 6" C.C.E.W.

Rim: 790.52' Rim to Invert: 3.8' Slack: 0.1" Sump: 2.5" Step Position:

Position	Elev	Angle	Ext. (cw)	Pipe	Pipe OD	Connector	Hole	Horz Size	Up (_)	Offset
Invert 1	786.72'	0°	24"	18" RCP B WALL	23"	Hole 26	26"	26"	0"	0"
Invert 2	788.02'	180°	37"	4" HDPE (perf pipe)	4.8"	Hole 6	6"	6"	17.7"	13"
Invert 3										
Invert 4										
Invert 5										
Invert 6										
Invert 7										
Invert 8										

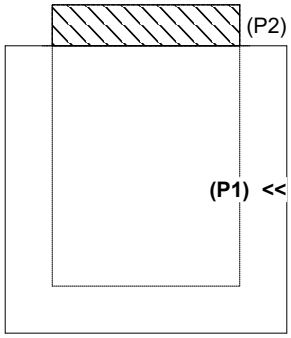

RIGHT-SIDE UP VIEW (int. dimensions)

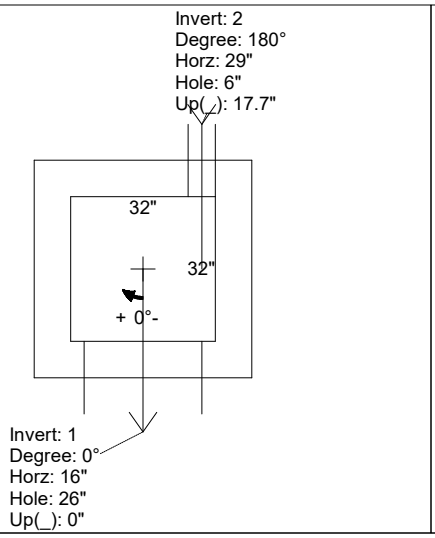

UPSIDE-DOWN VIEW (int. dimenions)

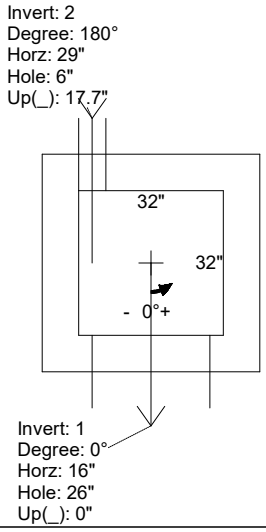

INSIDE WALL DIMENSIONS

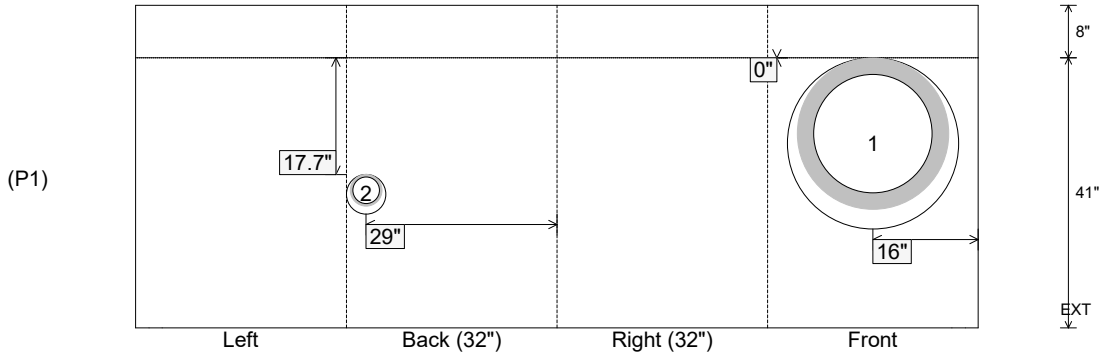

Coating (Int): Coating (Ext):	Seam Up: Flat Seam Dn: n/a	Wall Thickness: 8" Floor Height: 8"	Height (Int): 41" Height (Ext): 49"	Weight (Net): 5580 lb Volume (Net): 1.42cu.yd

Job Name: 25-2952 - KYTC Jefferson Co Call 106 (251315) Job Location: Indiana, KY Contractor: Louisville Paving and Construction	Plant: 100 6/12/2026 3:12:19 PM	Tech: J. Horsley - A PC: J. Jarvis	

Structure ID: 26

P2 BX024024-08LD08-14 CB FLAT TOP 8"W (HOE KY-210) F/F

P3) 19.5" - CASTING (cast in) - 2.75"	0 lb
P2) 24" x 24" - CB FLAT TOP 8"W (HOE KY-210) F/F - 8"	943 lb
P1) 24" x 24" - BOX BASE 8inW, 8inF, Variable Ht F/n - 31"	3316 lb
1) This Structure Includes a Cast-in Item - HOE KY-210 Frame (Supplied By Others)	0 lb
1) 24" x 24" - Conseal CS-102 1.00"	0 lb
2) Hole - 20	0 lb
Structure Total:	4259 lb

Structure Notes:

** KYTC STATE PROJECT **

1. PER KYTC DBI TYPE 14 / ASTM C-913 SPECS
2. CONCRETE: 4,000 PSI AT 28 DAYS
3. REINFORCEMENT: #5 BAR @ 6" C.C. E.W. (GRADE 60) - 2" MIN. REBAR CLEARANCE (TYP)
4. HOE KY-210 FRAME & GRATE SUPPLIED BY OTHERS - FRAME TO BE CAST INTO FLAT LID
5. LIFTERS: 2 EA. 5CA14 CONAC A-ANCHORS FOR PLANT & FIELD HANDLING - INSTALLED AS SHOWN
6. TOP SURFACE TO RECEIVE LIGHT BRUSH FINISH

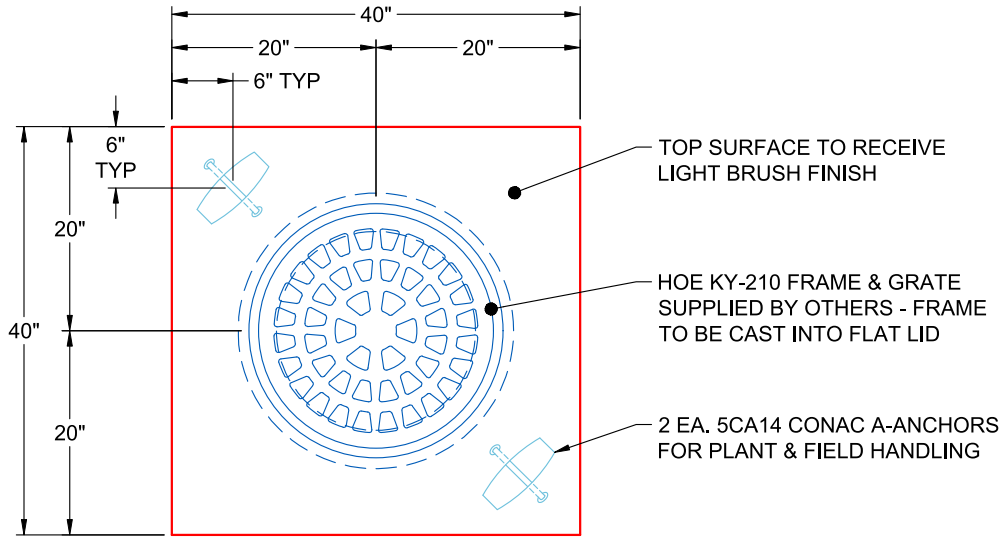

PLAN VIEW
(RIGHT SIDE UP)

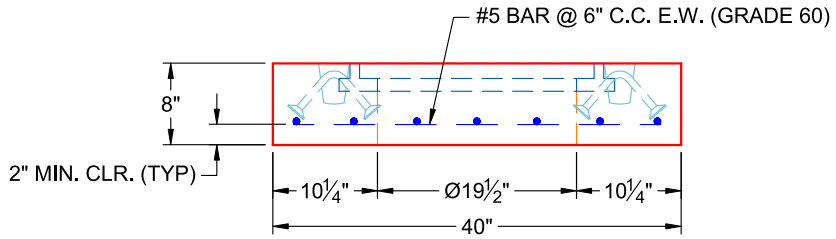

FRONT VIEW
(RIGHT SIDE UP)

Coating (Int): Coating (Ext):	Seam Up: Flat Seam Dn: Flat	Wall Thickness: 8"	Height (Ext): 8"	Weight (Net): 943 lb Volume (Net): 0.24cu.yd

Job Number:

25-2952

Job Name:

KYTC Jefferson Co Call 106 (251315)

Structure:

26

Note:

HOE KY-210 Frame Supplied By Others To Be Cast Into Flat Lid

Job Name: 25-2952 - KYTC Jefferson Co Call 106 (251315) Job Location: Indiana, KY Contractor: Louisville Paving and Construction	Plant: 100 6/12/2026 3:12:19 PM	Tech: J. Horsley - A PC: J. Jarvis	

Structure ID: 25

P2 BX024024-08LD08-14 CB FLAT TOP 8"W (HOE KY-210) F/F

P3) 19.5" - CASTING (cast in) - 2.75"	0 lb
P2) 24" x 24" - CB FLAT TOP 8"W (HOE KY-210) F/F - 8"	943 lb
P1) 24" x 24" - BOX BASE 8inW, 8inF, Variable Ht F/n - 31"	3316 lb
1) This Structure Includes a Cast-in Item - HOE KY-210 Frame (Supplied By Others)	0 lb
1) 24" x 24" - Conseal CS-102 1.00"	0 lb
2) Hole - 20	0 lb
Structure Total:	4259 lb

Structure Notes:

** KYTC STATE PROJECT **

1. PER KYTC DBI TYPE 14 / ASTM C-913 SPECS
2. CONCRETE: 4,000 PSI AT 28 DAYS
3. REINFORCEMENT: #5 BAR @ 6" C.C. E.W. (GRADE 60) - 2" MIN. REBAR CLEARANCE (TYP)
4. HOE KY-210 FRAME & GRATE SUPPLIED BY OTHERS - FRAME TO BE CAST INTO FLAT LID
5. LIFTERS: 2 EA. 5CA14 CONAC A-ANCHORS FOR PLANT & FIELD HANDLING - INSTALLED AS SHOWN
6. TOP SURFACE TO RECEIVE LIGHT BRUSH FINISH

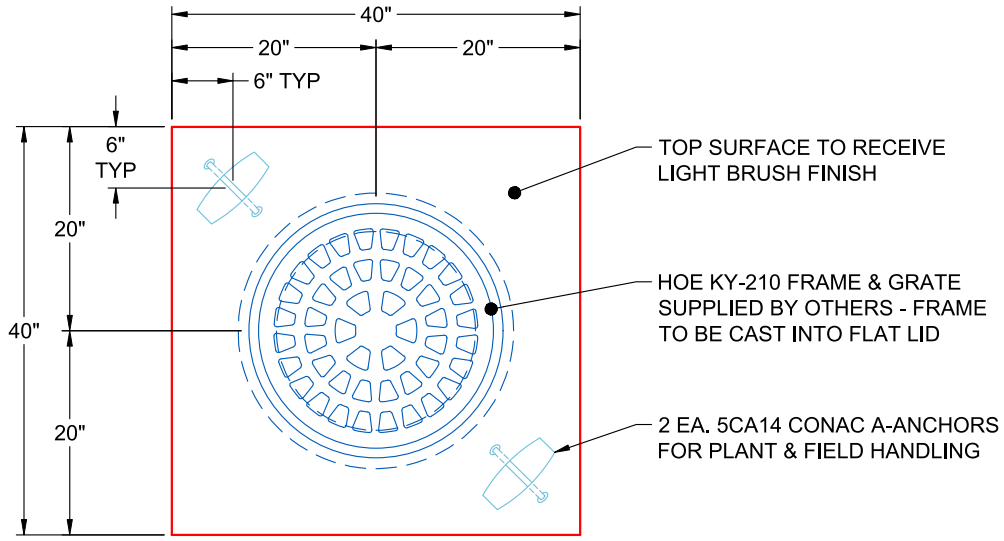

PLAN VIEW
(RIGHT SIDE UP)

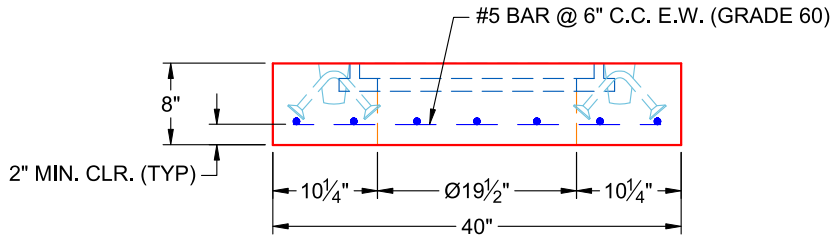

FRONT VIEW
(RIGHT SIDE UP)

Coating (Int): Coating (Ext):	Seam Up: Flat Seam Dn: Flat	Wall Thickness: 8"	Height (Ext): 8"	Weight (Net): 943 lb Volume (Net): 0.24cu.yd

Job Number:

25-2952

Job Name:

KYTC Jefferson Co Call 106 (251315)

Structure:

25

Note:

HOE KY-210 Frame Supplied By Others To Be Cast Into Flat Lid

Job Name: 25-2952 - KYTC Jefferson Co Call 106 (251315) Job Location: Indiana, KY Contractor: Louisville Paving and Construction	Plant: 100 6/12/2026 3:12:17 PM	Tech: J. Horsley - A PC: J. Jarvis	

Structure ID: 54

P2 BX024030-08LD08-15X27 CB FLAT TOP 8"W w/15"x27" HOLE F/F

P3) 15" x 27" - P.I.P. - BY OTHERS - 8"	0 lb
P2) 24" x 30" - CB FLAT TOP 8"W w/15"x27" HOLE F/F - 8"	963 lb
P1) 24" x 30" - BOX BASE 8inW, 8inF, Variable Ht F/n - 47"	4986 lb
1) 24" x 30" - Conseal CS-102 1.00"	0 lb
1) 15" x 27" - Conseal CS-102 1.00"	0 lb
1) Hole - 24	0 lb
2) Hole - 20	0 lb
2) Hole - 4	0 lb
Structure Total:	5949 lb

Structure Notes:

** KYTC STATE PROJECT **

1. PER KYTC DBI TYPE 13G / ASTM C-913 SPECS
2. CONCRETE: 4,000 PSI AT 28 DAYS
3. REINFORCEMENT: DOUBLE MAT #5 BAR @ 6" C.C. E.W. (GRADE 60) - 2" MIN. REBAR CLEARANCE (TYP)
4. HOE KY-230G FRAME & GRATE SUPPLIED BY OTHERS - POURED IN PLACE BY OTHERS
5. WET STICK #5 BAR @ 12" C.C. (GRADE 60) 6" OUT TOP OF FLAT LID AROUND 15" X 27" OPENING FOR FIELD POUR TIE-IN - 4" MIN. PENETRATION INTO FLAT LID
6. LIFTERS: 4 EA. WRA016 CONAC WIRE ROPE ANCHORS FOR PLANT & FIELD HANDLING
7. TOP SURFACE TO RECEIVE FLOATED FINISH

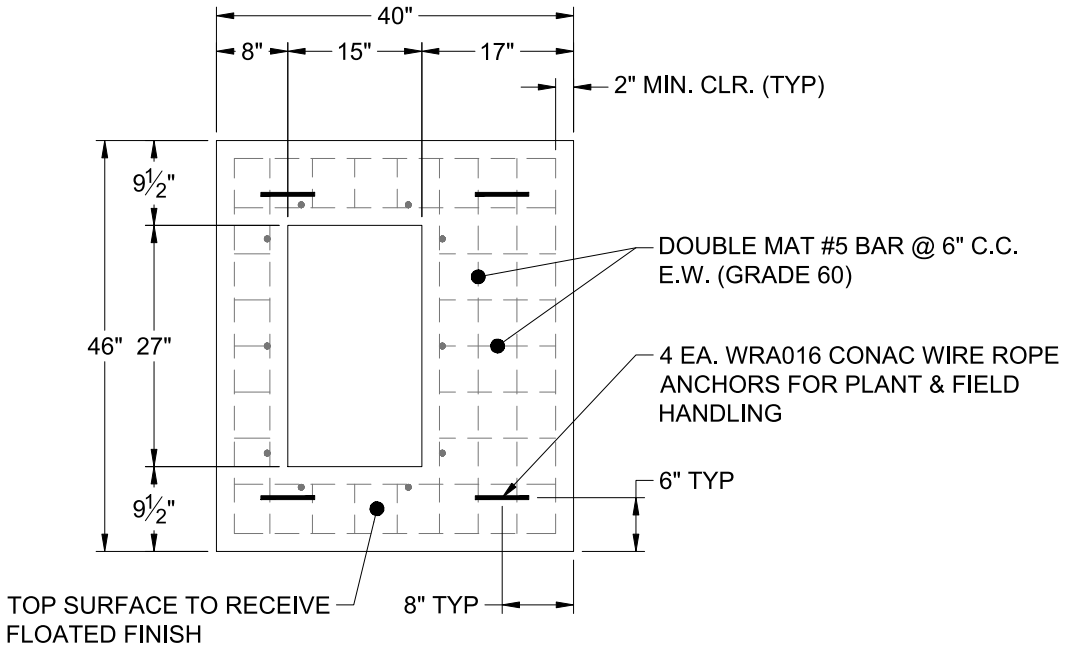

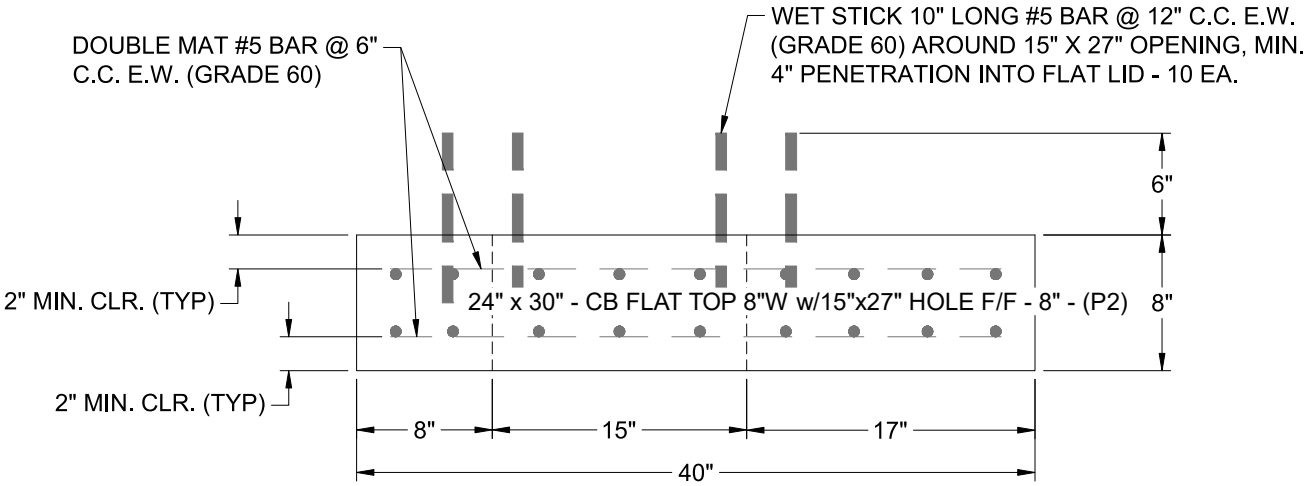

Coating (Int): Coating (Ext):	Seam Up: Flat Seam Dn: Flat	Wall Thickness: 8"	Height (Ext): 8"	Weight (Net): 963 lb Volume (Net): 0.25cu.yd

Job Name: 25-2952 - KYTC Jefferson Co Call 106 (251315) Job Location: Indiana, KY Contractor: Louisville Paving and Construction	Plant: 100 6/12/2026 3:12:16 PM	Tech: J. Horsley - A PC: J. Jarvis	

Structure ID: 52

P2 BX024030-08LD08-15X27 CB FLAT TOP 8"W w/15"x27" HOLE F/F

P3) 15" x 27" - P.I.P. - BY OTHERS - 8"	0 lb
P2) 24" x 30" - CB FLAT TOP 8"W w/15"x27" HOLE F/F - 8"	963 lb
P1) 24" x 30" - BOX BASE 8inW, 8inF, Variable Ht F/n - 44"	5143 lb
1) 24" x 30" - Conseal CS-102 1.00"	0 lb
1) 15" x 27" - Conseal CS-102 1.00"	0 lb
1) Hole - 20	0 lb
2) Hole - 4	0 lb
Structure Total:	6106 lb

Structure Notes:

** KYTC STATE PROJECT **

1. PER KYTC DBI TYPE 13G / ASTM C-913 SPECS
2. CONCRETE: 4,000 PSI AT 28 DAYS
3. REINFORCEMENT: DOUBLE MAT #5 BAR @ 6" C.C. E.W. (GRADE 60) - 2" MIN. REBAR CLEARANCE (TYP)
4. HOE KY-230G FRAME & GRATE SUPPLIED BY OTHERS - POURED IN PLACE BY OTHERS
5. WET STICK #5 BAR @ 12" C.C. (GRADE 60) 6" OUT TOP OF FLAT LID AROUND 15" X 27" OPENING FOR FIELD POUR TIE-IN - 4" MIN. PENETRATION INTO FLAT LID
6. LIFTERS: 4 EA. WRA016 CONAC WIRE ROPE ANCHORS FOR PLANT & FIELD HANDLING
7. TOP SURFACE TO RECEIVE FLOATED FINISH

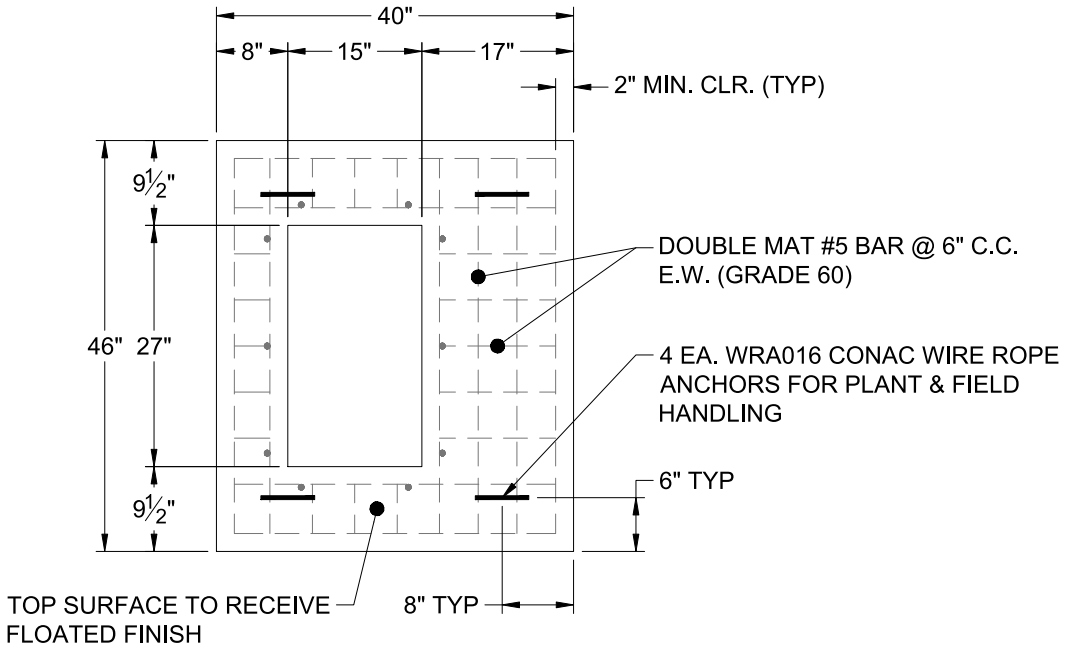

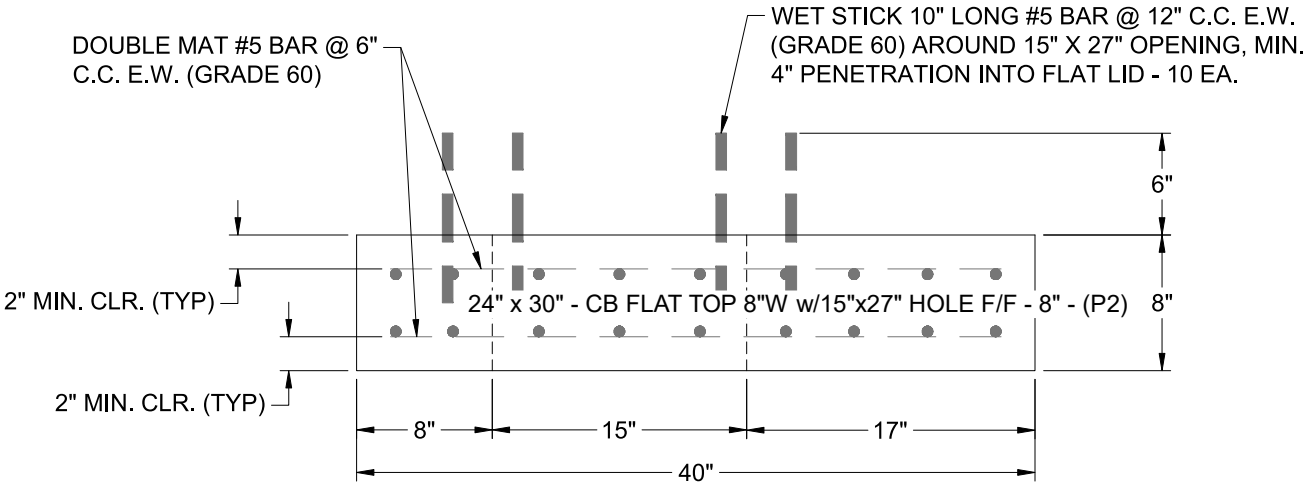

Coating (Int): Coating (Ext):	Seam Up: Flat Seam Dn: Flat	Wall Thickness: 8"	Height (Ext): 8"	Weight (Net): 963 lb Volume (Net): 0.25cu.yd

Job Name: 25-2952 - KYTC Jefferson Co Call 106 (251315) Job Location: Indiana, KY Contractor: Louisville Paving and Construction	Plant: 100 6/12/2026 3:12:15 PM	Tech: J. Horsley - A PC: J. Jarvis	

Structure ID: 91

P2 BX024030-08LD08-15X27 CB FLAT TOP 8"W w/15"x27" HOLE F/F

P3) 15" x 27" - P.I.P. - BY OTHERS - 8"	0 lb
P2) 24" x 30" - CB FLAT TOP 8"W w/15"x27" HOLE F/F - 8"	963 lb
P1) 24" x 30" - BOX BASE 8inW, 8inF, Variable Ht F/n - 44"	4932 lb
1) 24" x 30" - Conseal CS-102 1.00"	0 lb
1) 15" x 27" - Conseal CS-102 1.00"	0 lb
2) Hole - 20	0 lb
2) Hole - 4	0 lb
Structure Total:	5895 lb

Structure Notes:

** KYTC STATE PROJECT **

1. PER KYTC DBI TYPE 13G / ASTM C-913 SPECS
2. CONCRETE: 4,000 PSI AT 28 DAYS
3. REINFORCEMENT: DOUBLE MAT #5 BAR @ 6" C.C. E.W. (GRADE 60) - 2" MIN. REBAR CLEARANCE (TYP)
4. HOE KY-230G FRAME & GRATE SUPPLIED BY OTHERS - POURED IN PLACE BY OTHERS
5. WET STICK #5 BAR @ 12" C.C. (GRADE 60) 6" OUT TOP OF FLAT LID AROUND 15" X 27" OPENING FOR FIELD POUR TIE-IN - 4" MIN. PENETRATION INTO FLAT LID
6. LIFTERS: 4 EA. WRA016 CONAC WIRE ROPE ANCHORS FOR PLANT & FIELD HANDLING
7. TOP SURFACE TO RECEIVE FLOATED FINISH

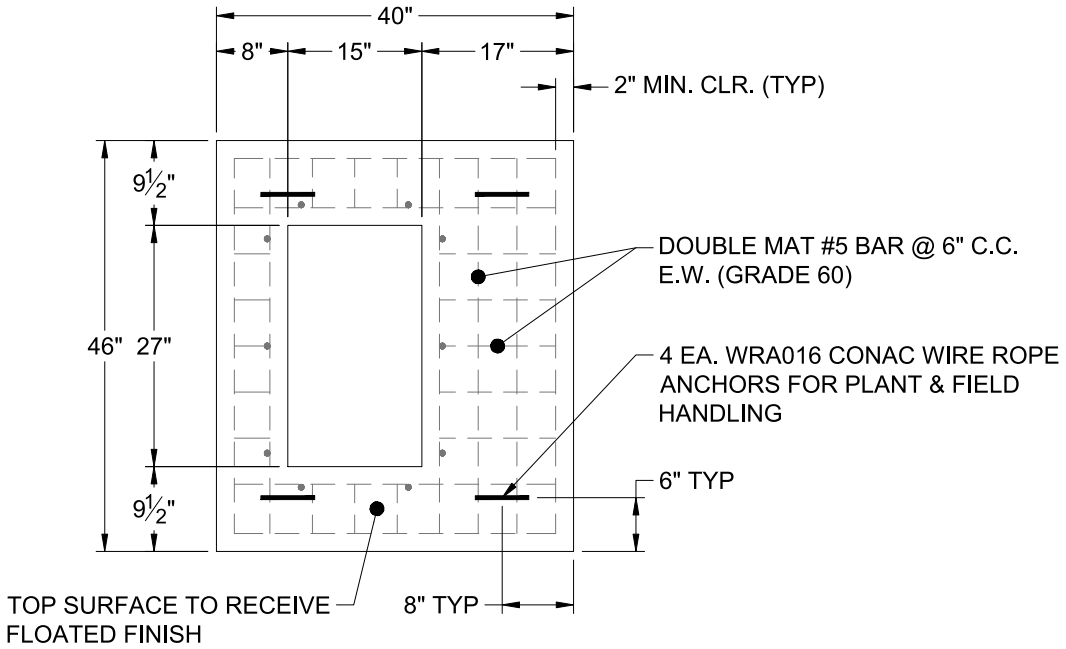

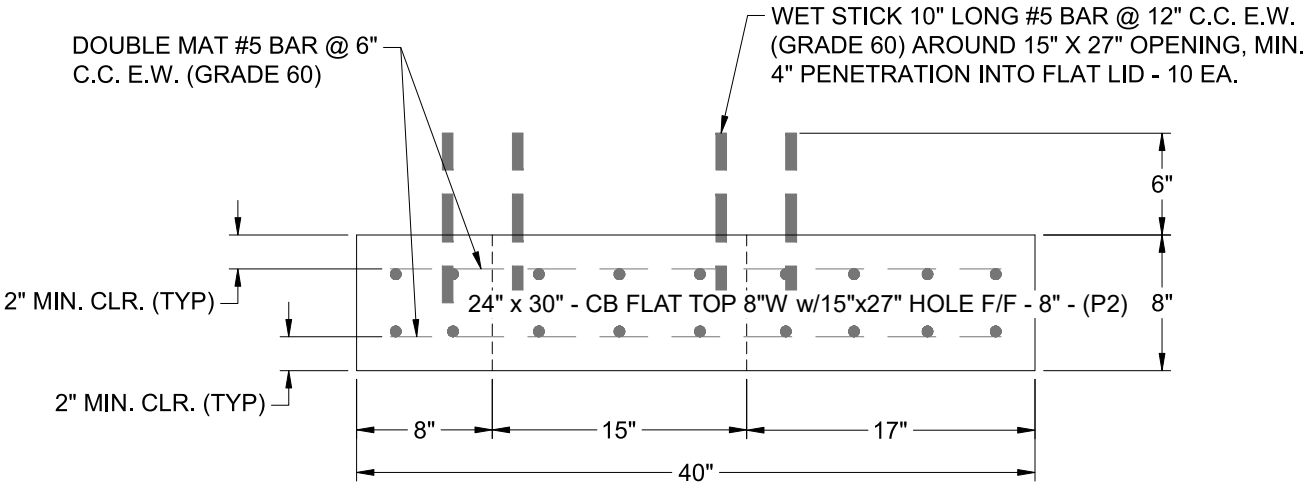

Coating (Int): Coating (Ext):	Seam Up: Flat Seam Dn: Flat	Wall Thickness: 8"	Height (Ext): 8"	Weight (Net): 963 lb Volume (Net): 0.25cu.yd

Job Name: 25-2952 - KYTC Jefferson Co Call 106 (251315) Job Location: Indiana, KY Contractor: Louisville Paving and Construction	Plant: 100 6/12/2026 3:12:20 PM	Tech: J. Horsley - A PC: J. Jarvis	

Structure ID: 23

P2 BX024024-08LD08-14 CB FLAT TOP 8"W (HOE KY-210) F/F

P3) 19.5" - CASTING (cast in) - 2.75"	0 lb
P2) 24" x 24" - CB FLAT TOP 8"W (HOE KY-210) F/F - 8"	943 lb
P1) 24" x 24" - BOX BASE 8inW, 8inF, Variable Ht F/n - 31"	3316 lb
1) This Structure Includes a Cast-in Item - HOE KY-210 Frame (Supplied By Others)	0 lb
1) 24" x 24" - Conseal CS-102 1.00"	0 lb
2) Hole - 20	0 lb
Structure Total:	4259 lb

Structure Notes:

** KYTC STATE PROJECT **

1. PER KYTC DBI TYPE 14 / ASTM C-913 SPECS
2. CONCRETE: 4,000 PSI AT 28 DAYS
3. REINFORCEMENT: #5 BAR @ 6" C.C. E.W. (GRADE 60) - 2" MIN. REBAR CLEARANCE (TYP)
4. HOE KY-210 FRAME & GRATE SUPPLIED BY OTHERS - FRAME TO BE CAST INTO FLAT LID
5. LIFTERS: 2 EA. 5CA14 CONAC A-ANCHORS FOR PLANT & FIELD HANDLING - INSTALLED AS SHOWN
6. TOP SURFACE TO RECEIVE LIGHT BRUSH FINISH

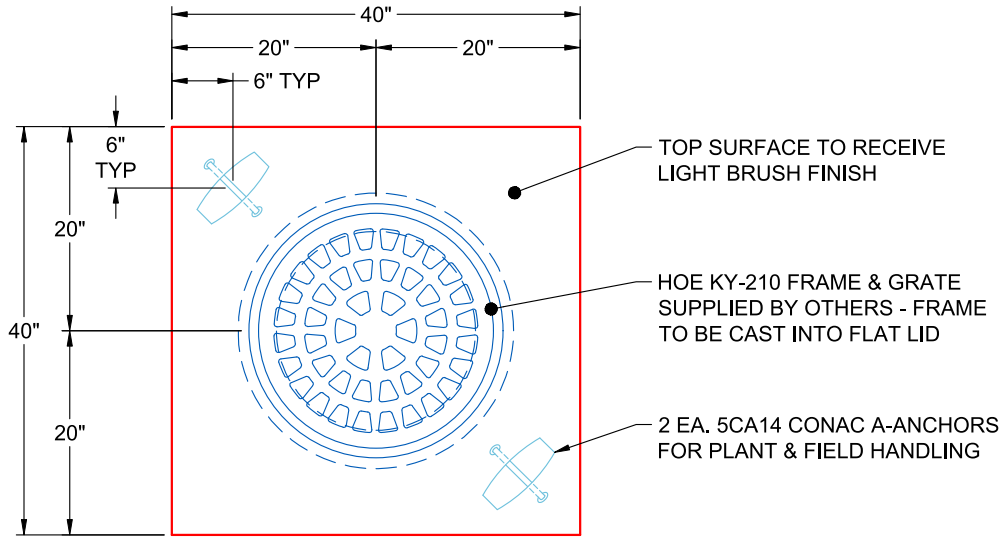

PLAN VIEW
(RIGHT SIDE UP)

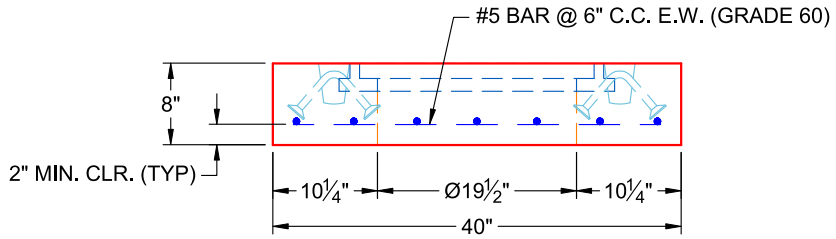

FRONT VIEW
(RIGHT SIDE UP)

Coating (Int): Coating (Ext):	Seam Up: Flat Seam Dn: Flat	Wall Thickness: 8"	Height (Ext): 8"	Weight (Net): 943 lb Volume (Net): 0.24cu.yd

Job Number:

25-2952

Job Name:

KYTC Jefferson Co Call 106 (251315)

Structure:

23

Note:

HOE KY-210 Frame Supplied By Others To Be Cast Into Flat Lid

Job Name: 26-2030 - KYTC McCracken Co. Call 111 (ID 264505)
Job Location: Paducah, KY
Contractor: Jim Smith Contracting Co, LLC

Plant: 100
6/12/2026 7:49:42 AM

Tech: J. Horsley
PC: J. Jarvis

Structure ID: 151+22 LT S-2 CBIB

P1 BX2424-08BAVF BOX BASE 8inW, 8inF, Variable Ht T/n

P5) 8" x 120" - CB INLET KY B 10' TOP F/G - 9"	1660 lb
P4) 24" x 120" - CB INLET KY B 10' BOTTOM RIGHT T/G - 17"	2650 lb
P3) 24" x 24" - FIELD ADJUSTMENT - 3"	0 lb
P2) 24" x 24" - BOX RISER 8inW F/G - 24"	2062 lb
P1) 24" x 24" - BOX BASE 8inW, 8inF, Variable Ht T/n - 44"	4684 lb
1) CASTING - HOE KY-345 SET (CBI B)	290 lb
2) 24" x 24" - Conseal CS-102 1.00"	0 lb
1) Hole - 18	0 lb
Structure Total:	11346 lb

Structure Notes: .
** KYTC STATE PROJECT **
1. PER KYTC CBI TYPE B / ASTM C913 SPEC'S.
2. CONCRETE = 4,000 PI AT 28 DAYS.
3. CASTING BT ICAST (HOE KY-345 F/G(CBI-B)
.
REINFORCING PER ASTM A615 (GRADE 60).
- TOP PHASE (As .62) #5 BARS AT 6" C.C.E.W.
- WALLS (As .31) #5 BARS AT 12" C.C.E.W.
- FLOOR (As .31) #5 BARS AT 12" C.C.E.W.

Rim: 374.92' Rim to Invert: 8.11' Slack: 0.32" Sump: 0" Step Position:

Position	Elev	Angle	Ext. (cw)	Pipe	Pipe OD	Connector	Hole	Horz Size	Up (_)	Offset
Invert 1	366.81'	0°	20"	15" CMP	16"	Hole 18	18"	18"	-1.5"	0"
Invert 2										
Invert 3										
Invert 4										
Invert 5										
Invert 6										
Invert 7										
Invert 8										

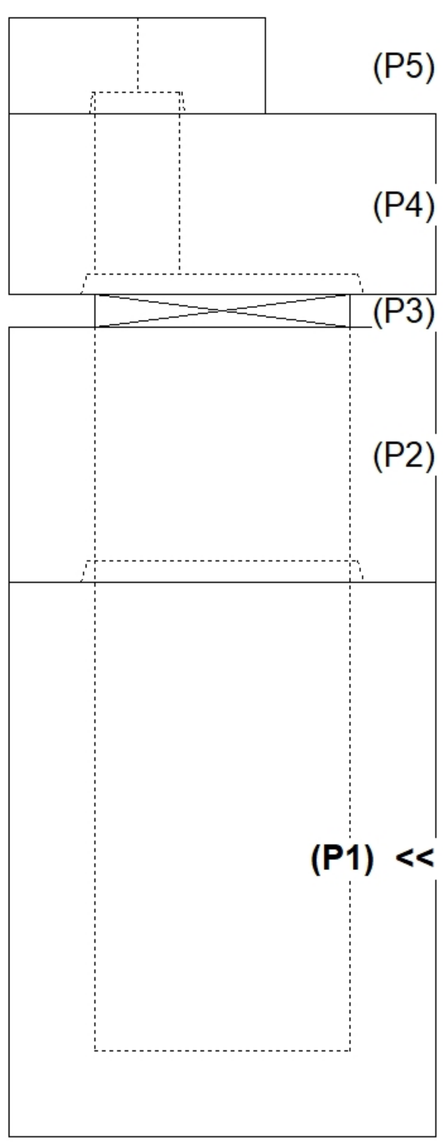

RIGHT-SIDE UP VIEW (int. dimensions)

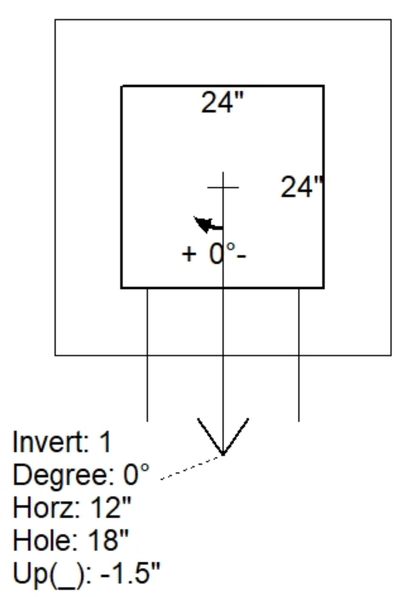

UPSIDE-DOWN VIEW (int. dimenions)

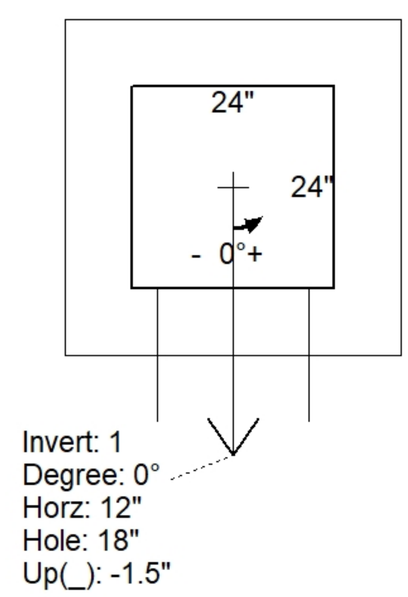

INSIDE WALL DIMENSIONS

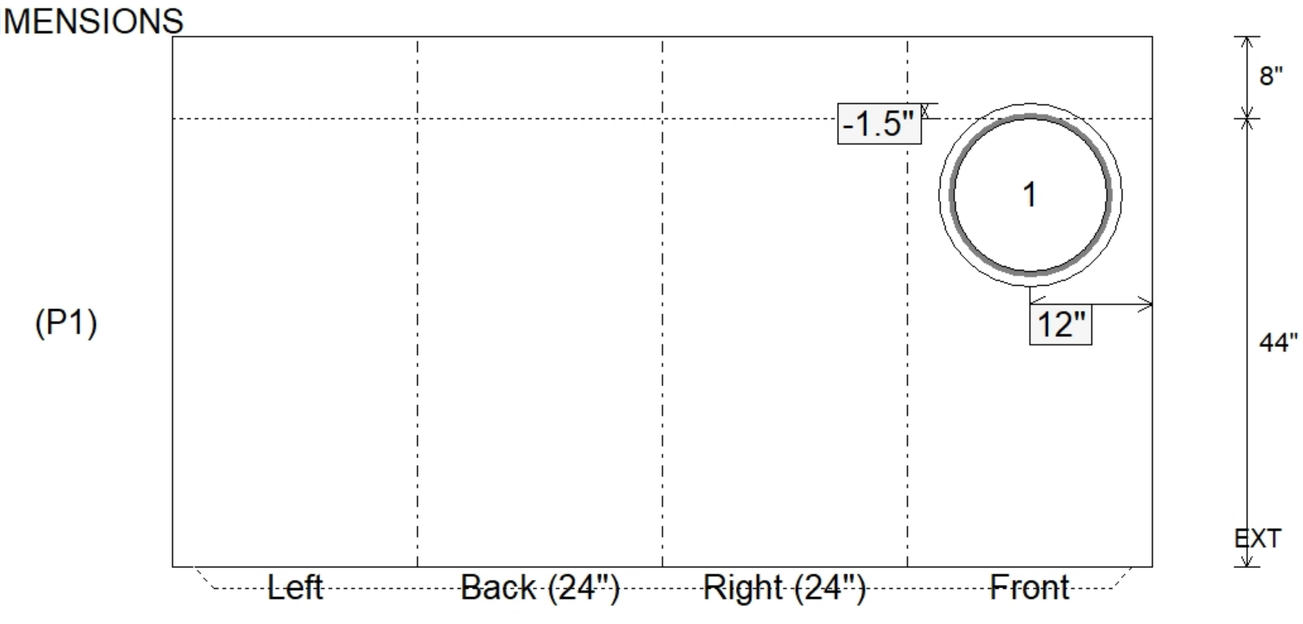

Coating (Int): Coating (Ext):	Seam Up: Tongue Seam Dn: n/a	Wall Thickness: 8" Floor Height: 8"	Height (Int): 44" Height (Ext): 52"	Weight (Net): 4684 lb Volume (Net): 1.2cu.yd

Job Name: 26-2030 - KYTC McCracken Co. Call 111 (ID 264505)
Job Location: Paducah, KY
Contractor: Jim Smith Contracting Co, LLC

Plant: 100
6/12/2026 7:49:41 AM

Tech: J. Horsley
PC: J. Jarvis

Structure ID: 151+22 RT S-3 CBIB

P1 BX2424-08BA36 BOX BASE 8inW, 8inF T/n

P5) 8" x 120" - CB INLET KY B 10' TOP F/G - 9"	1660 lb
P4) 24" x 120" - CB INLET KY B 10' BOTTOM LEFT T/G - 17"	2650 lb
P3) 24" x 24" - FIELD ADJUSTMENT - 2"	0 lb
P2) 24" x 24" - BOX RISER 8inW F/G - 36"	3093 lb
P1) 24" x 24" - BOX BASE 8inW, 8inF T/n - 36"	3486 lb
1) CASTING - HOE KY-345 SET (CBI B)	290 lb
2) 24" x 24" - Conseal CS-102 1.00"	0 lb
2) Hole - 22	0 lb
1) Hole - 18	0 lb
Structure Total:	11180 lb

Structure Notes: .
** KYTC STATE PROJECT **
1. PER KYTC CBI TYPE B / ASTM C913 SPEC'S.
2. CONCRETE = 4,000 PI AT 28 DAYS.
3. CASTING BT ICAST (HOE KY-345 F/G(CBI-B)
.
REINFORCING PER ASTM A615 (GRADE 60).
- TOP PHASE (As .62) #5 BARS AT 6" C.C.E.W.
- WALLS (As .31) #5 BARS AT 12" C.C.E.W.
- FLOOR (As .31) #5 BARS AT 12" C.C.E.W.

Rim: 375.16' Rim to Invert: 8.38' Slack: 0.56" Sump: 0" Step Position:

Position	Elev	Angle	Ext. (cw)	Pipe	Pipe OD	Connector	Hole	Horz Size	Up (_)	Offset
Invert 1	366.78'	180°	20"	18" CMP	19"	Hole 22	22"	22"	-2"	0"
Invert 2	366.78'	0°	20"	18" CMP	19"	Hole 22	22"	22"	-2"	0"
Invert 3	366.78'	90°	20"	15" CMP	16"	Hole 18	18"	18"	-1.5"	0"
Invert 4										
Invert 5										
Invert 6										
Invert 7										
Invert 8										

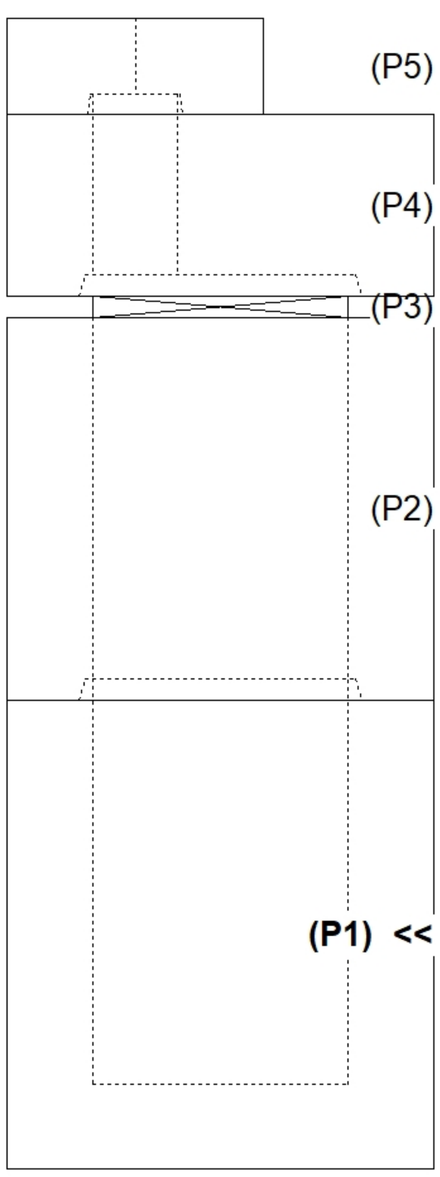

RIGHT-SIDE UP VIEW (int. dimensions)

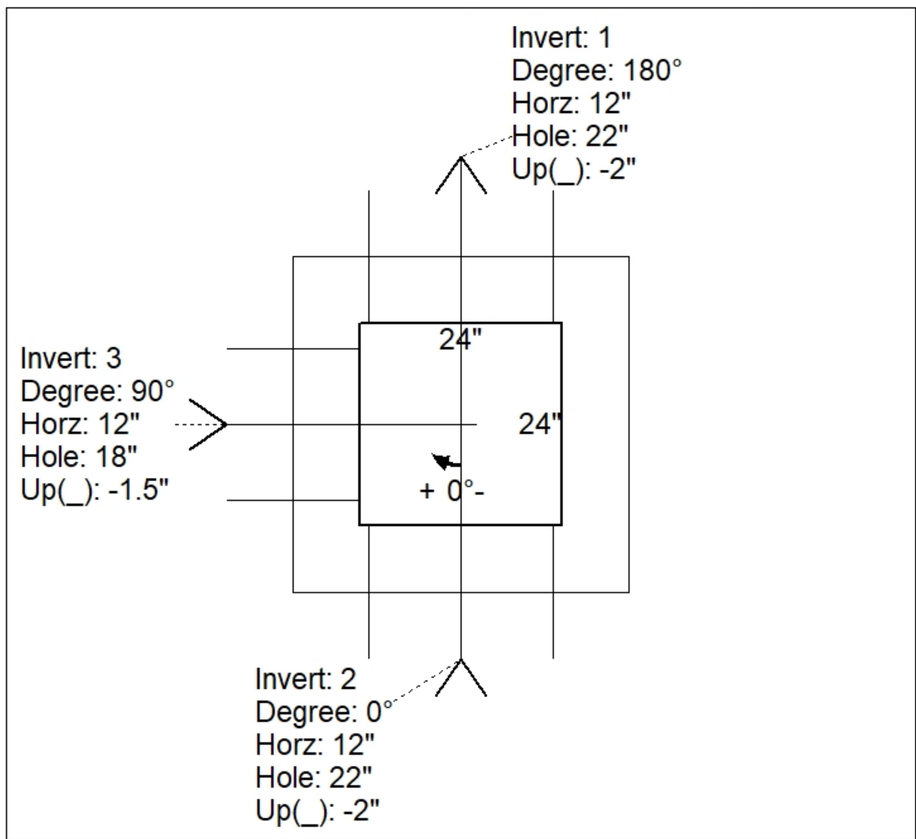

UPSIDE-DOWN VIEW (int. dimenions)

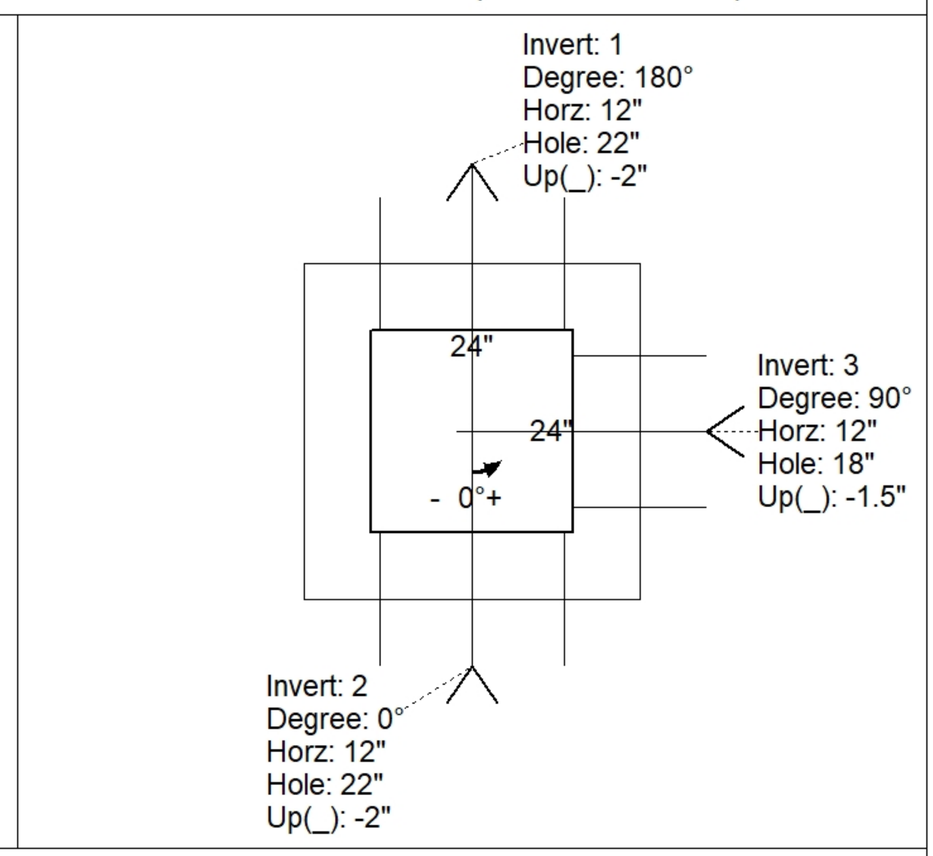

INSIDE WALL DIMENSIONS

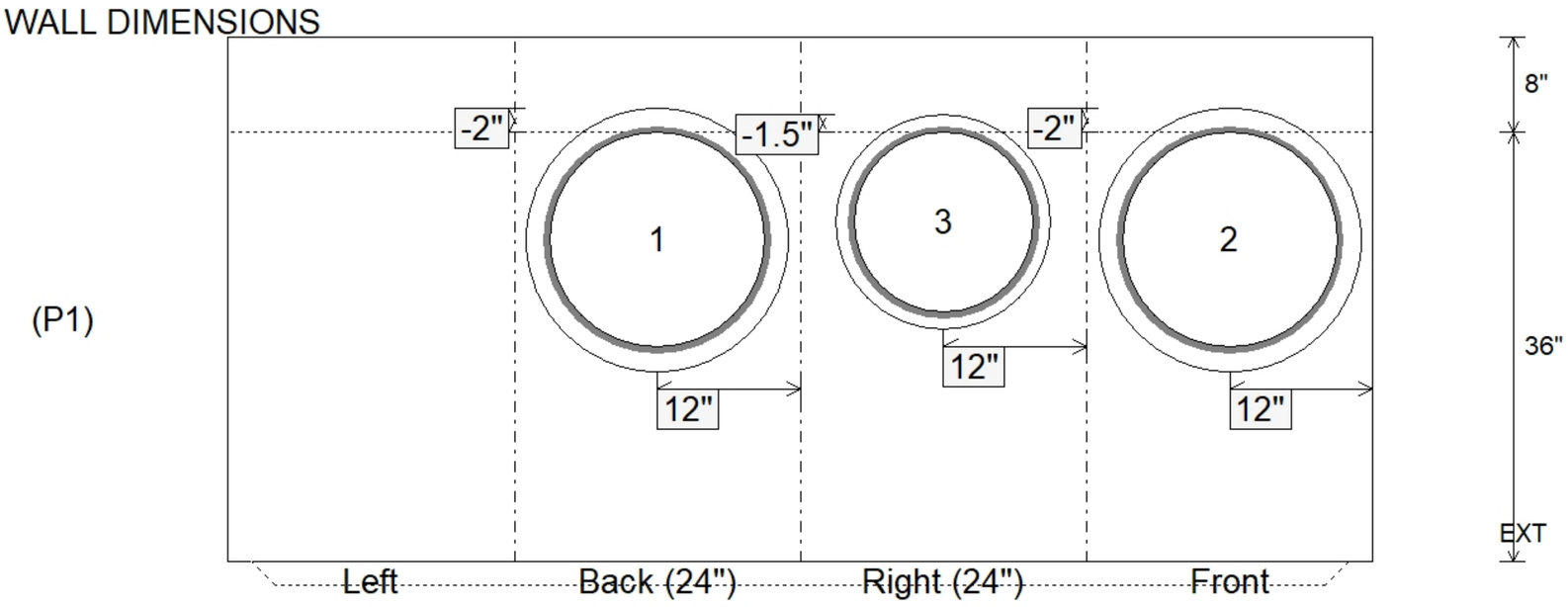

Coating (Int): Coating (Ext):	Seam Up: Tongue Seam Dn: n/a	Wall Thickness: 8" Floor Height: 8"	Height (Int): 36" Height (Ext): 44"	Weight (Net): 3486 lb Volume (Net): 0.89cu.yd