Job Name: 25-4547 - WWTP Improvements & Hydraulic Expansion Job Location: Shepherdsville, KY Contractor: Pace Contracting, LLC	Plant: 100 6/4/2026 3:35:44 PM	Tech: Jared - F PC: J Jarvis	

Structure ID: PROCESS RETURN P.S.

P2 MH084RS96 MH RISER T/G

P5) 48" x 60" - HATCH (CAST FLUSH) - 3"	100 lb
P4) 84" - MH FLAT TOP w/48"x60" Hatch F/G - 17"	5512 lb
P3) 84" - MH RISER Custom Ht T/G - 44"	8537 lb
P2) 84" - MH RISER T/G - 96"	17932 lb
P1) 84" - MH BASE w/FLANGE (12F/07EF) T/n - 77"	25218 lb
1) JOINT WRAP - 12" WD x 084" MH MAC WRAP	0 lb
1) HATCH (Alum.) - HALLIDAY W2S 48"x60"	126 lb
3) 84" - Conseal CS-231 1.00" (Double)	0 lb
1) 48" x 60" - Conseal CS-231 1.00" (Double)	0 lb
2) Z-Lok - C107-8	2 lb
1) PSX - 8QRS-S NYLO	6 lb
1) PSX - 16Y NYLO	8 lb
2) PSX - 12-06 NYLO	16 lb
1) Kor-N-Seal2 - S206-18L	6 lb
Structure Total:	57463 lb

Rim: 448.25' Rim to Invert: 12.25' Slack: 0" Sump: 87" Step Position:

Structure Notes: .
1. PER ASTM C478 SPECIFICATIONS.
2. CONCRETE = 4,000 PSI AT 28 DAYS.
3. HATCH SUPPLIED BY I-CAST (HALLIDAY W2S 48"X60").
.
REINFORCING PER ASTM A615 (GRADE 60).
- TOP SLAB (As .31) #5 BARS AT 6" C.C.E.W (DOUBLE MAT).
- RISER/WALLS (As .36)
- FLOOR (As .37) #5 BARS AT 10" C.C.E.W (DOUBLE MAT).

Position	Elev	Angle	Ext. (cw)	Pipe	Pipe OD	Connector	Hole	Horz Size	Up (_)	Offset
Invert 5	440.42'	0°	-12.125"	8" PVC SDR35	8.5"	Z-Lok C107-8	13.5"	14.173"	55.25"	-12"
Invert 6	440.42'	0°	12.125"	8" PVC SDR35	8.5"	Z-Lok C107-8	13.5"	14.173"	55.25"	12"
Invert 7	439.45'	0°	0"	4" DI	4.75"	PSX 8QRS-S NYLO	8"	8.012"	44.375"	0"
Invert 8	437.3'	90°	78.5"	10" DI	11.1"	PSX 16Y NYLO	16"	16.098"	17.625"	0"
Invert 9	442'	140°	122.125"	6" DI	6.875"	PSX 12-06 NYLO	12"	12.041"	74"	0"
Invert 10	440.25'	227°	198.125"	14" DI	15.3"	Kor-N-Seal2 S206-18L	18"	18.141"	54"	0"
Invert 11	436'	270°	235.625"	6" DI	6.875"	PSX 12-06 NYLO	12"	12.041"	2"	0"
Invert 12										

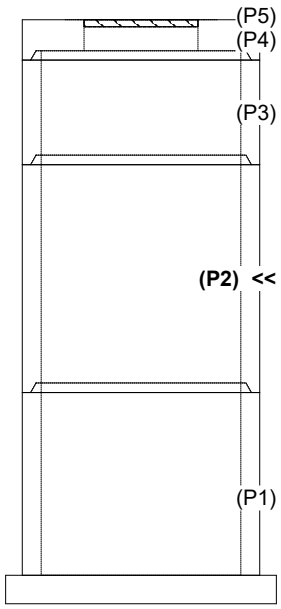

RIGHT-SIDE UP VIEW (int. dimensions)

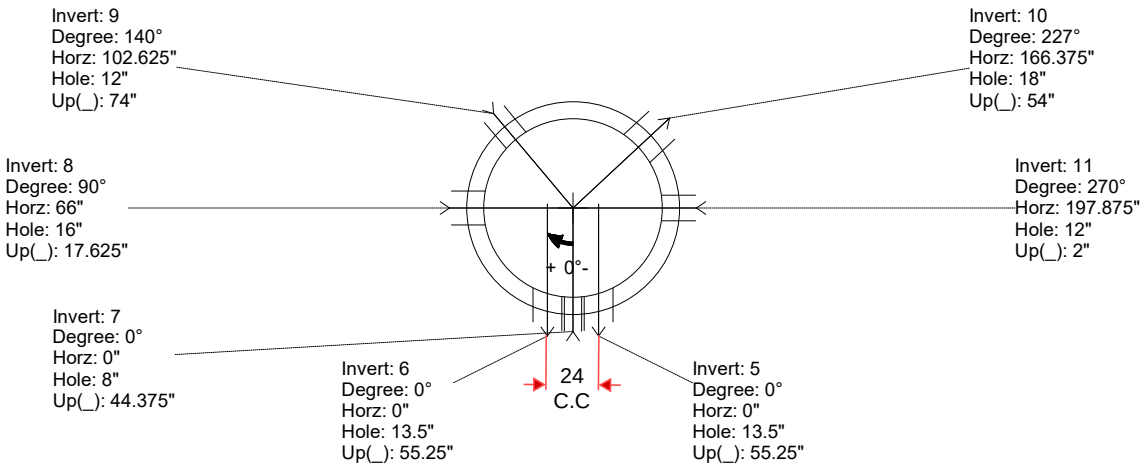

INSIDE WALL DIMENSIONS

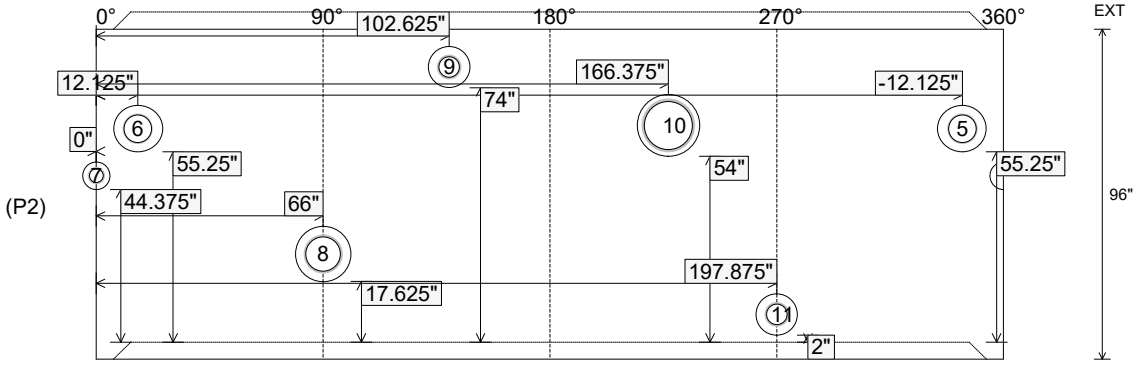

Coating (Int): Coating (Ext):	Seam Up: Tongue Seam Dn: Groove	Wall Thickness: 8" Floor Height: 0"	Height (Int): 96" Height (Ext): 96"	Weight (Net): 17932 lb Volume (Net): 4.58cu.yd