Job Name: 25-4547 - WWTP Improvements & Hydraulic Expansion Job Location: Shepherdsville, KY Contractor: Pace Contracting, LLC	Plant: 100 5/29/2026 3:21:16 PM	Tech: Jared - F PC: J Jarvis	

Structure ID: MH-PE

P1 MH120BVF **MH BASE T/n**

P4) 24" - CASTING HEIGHT - 7"	0 lb
P3) 120" - MH FLAT TOP w/ 24" ECC Hole F/G - 18"	16678 lb
P2) 120" - MH RISER Custom Ht T/G - 41"	15575 lb
P1) 120" - MH BASE T/n - 60"	34832 lb
1) Chimney Seal - Cretex Chimney Seal	10 lb
1) JOINT WRAP - 0.065"x6"x50' CONSEAL CS212	0 lb
1) JOINT WRAP PRIMER - CONSEAL CS-75 (1 gal.)	0 lb
1) CASTING - HOE MC-375 F/C Sanitary	271 lb
2) 120" - Conseal CS-102 1.00" (Double)	0 lb
3) Kor-N-Seal2 - S206-42	20 lb
8) MH Step ML-10-TDS-NCR - 10"	0 lb
Structure Total:	67385 lb

Structure Notes: .
1. PER ASTM C478 SPECIFICATIONS.
2. CONCRETE = 4,000 PSI AT 28 DAYS.
3. NO INVERT CHANNEL.
4. CASTING SUPPLIED BY I-CAST (HOE MC-375 F/C SANITARY).

.
REINFORCING PER ASTM A615 (GRADE 60).
- TOP SLAB (As .31) #5 BARS AT 6" C.C.E.W.
- RISER/WALLS (As .36)
- FLOOR (As .37) #5 BARS AT 10" C.C.E.W.

Rim: 449' Rim to Invert: 10' Slack: 0" Sump: 6" Step Position: 270°

Position	Elev	Angle	Ext. (cw)	Pipe	Pipe OD	Connector	Hole	Horz Size	Up (_)	Offset
Invert 1	439'	0°	0"	36" DI	38.5"	Kor-N-Seal2 S206-42	42"	42.909"	3"	0"
Invert 2	439'	135°	167.25"	36" DI	38.5"	Kor-N-Seal2 S206-42	42"	42.909"	3"	0"
Invert 3	439.07'	225°	278.875"	36" DI	38.5"	Kor-N-Seal2 S206-42	42"	42.909"	3.875"	0"
Invert 4										
Invert 5										
Invert 6										
Invert 7										
Invert 8										

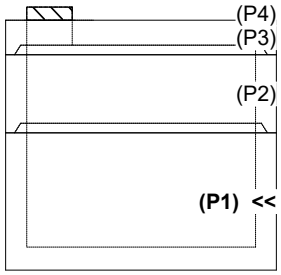

RIGHT-SIDE UP VIEW (int. dimensions)

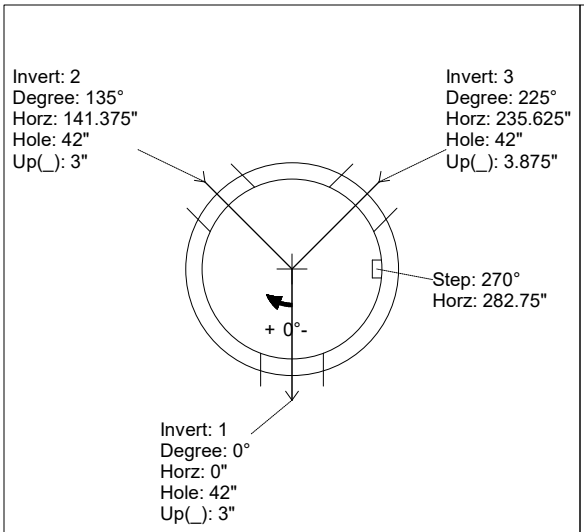

UPSIDE-DOWN VIEW (int. dimenions)

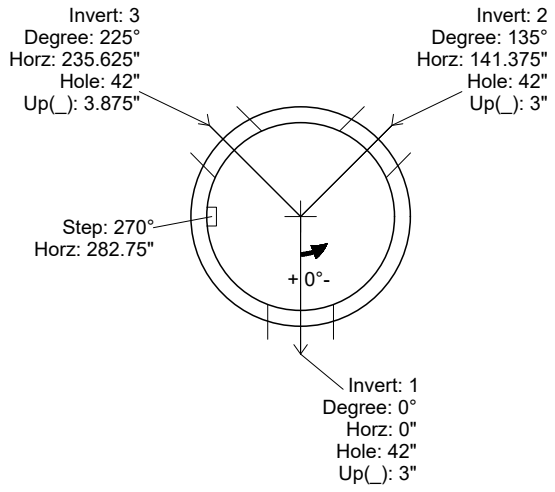

INSIDE WALL DIMENSIONS

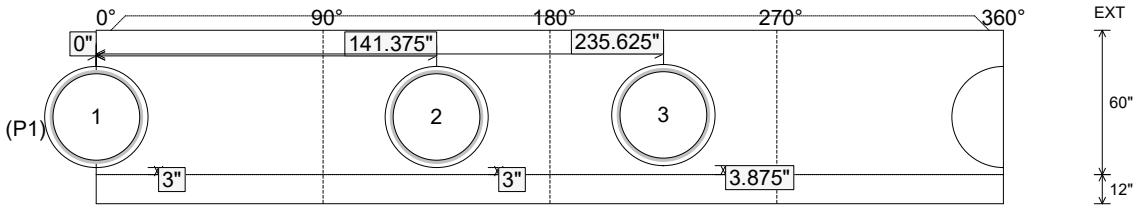

Coating (Int): Coating (Ext):	Seam Up: Tongue Seam Dn: n/a	Wall Thickness: 11" Floor Height: 12"	Height (Int): 60" Height (Ext): 72"	Weight (Net): 34832 lb Volume (Net): 8.9cu.yd

Job Name: 26-2485 855358 Fuqua Development Job Location: Nicholasville, KY Contractor: Contech Engineering Solutions	Plant: Beaver Dam 6/5/2026 8:57:15 AM	Tech: S. Felletter PC: C. Goff	

Structure ID: 20-CS-12

P2 MH144RSVF MH RISER Custom Ht T/G

P5) 24" - CASTING HEIGHT - 4"	0 lb
P4) 144" - MH FLAT TOP SPEC. (2 - 24"ø HOLES) F/G - 18"	23623 lb
P3) 144" - MH RISER Custom Ht T/G - 79"	38492 lb
P2) 144" - MH RISER Custom Ht T/G - 69"	37125 lb
P1) 144" - MH MONOBASE 14F, Custom Ht T/n - 24"	39578 lb
1) ASSEMBLY REQUIRED - BRACKETS ONLY	0 lb
1) CVSTENCILING	0 lb
3) 144" - Conseal CS-102 1.00"	0 lb
1) 24" - Conseal CS-102 1.00"	0 lb
2) Hole - 48	0 lb
Structure Total:	138818 lb

Rim: 1000.5' Rim to Invert: 7.25' Slack: 1.036" Sump: 108.036" Step Position:

Structure Notes: .
1. PER ASTM C478 SPECIFICATIONS.
2. CONCRETE = 4,000 PSI AT 28 DAYS.
3. 4" CASTING BY OTHERS
4. LIFTING ANCHORS TO BE INSTALLED ON THE OUTSIDE OF THE STRUCTURE
5. ICAST TO INSTALL BRACKETS ONLY
6. CONTECH'S LOGO AS WELL AS THE INLET AND OUTLET MUST BE STENCILED ONTO THE STRUCTURE

.
REINFORCING PER ASTM A615 (GRADE 60).
- TOP SLAB (As .62) #5 BARS AT 6" C.C.E.W.
- RISER/WALLS (As .36)
- FLOOR (As .47) #5 BARS AT 8" C.C.E.W.

Position	Elev	Angle	Ext. (cw)	Pipe	Pipe OD	Connector	Hole	Horz Size	Up (_)	Offset
Invert 1										
Invert 2										
Invert 3										
Invert 4										
Invert 5										
Invert 6										
Invert 7										
Invert 8										

RIGHT-SIDE UP VIEW (int. dimensions)

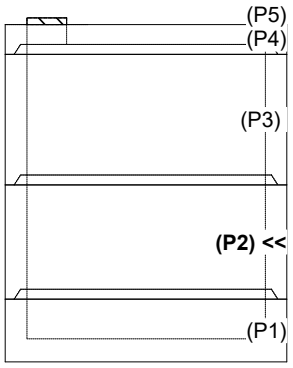

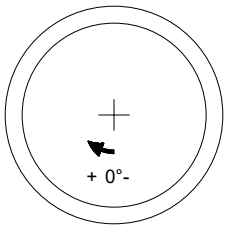

INSIDE WALL DIMENSIONS

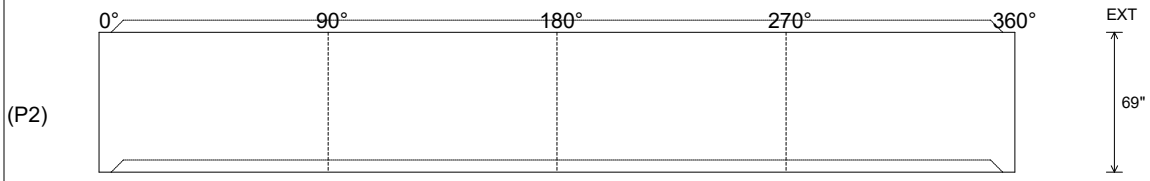

Coating (Int): Coating (Ext):	Seam Up: Tongue Seam Dn: Groove	Wall Thickness: 13" Floor Height: 0"	Height (Int): 69" Height (Ext): 69"	Weight (Net): 37125 lb Volume (Net): 9.48cu.yd

Job Name: 26-2080 - The Cumberland Job Location: Bowling Green, KY Contractor: J & J Concrete & Excavating, LLC	Plant: 100 6/22/2026 6:23:25 PM	Tech: Jared - A PC: E. Bradley	

Structure ID: C2 ST-CI

P1 MH048BAVF **MH BASE Custom Ht T/n**

P3) 24" x 36" - CASTING HEIGHT - 6"	0 lb
P2) 48" - MH FLAT TOP w/24"x36" Hole F/G - 12"	1300 lb
P1) 48" - MH BASE Custom Ht T/n - 40"	3493 lb
1) CASTING - HOE 525 SET (F/G/H)	442 lb
1) 48" - Conseal CS-102 1.00"	0 lb
1) 24" x 36" - Conseal CS-102 1.00"	0 lb
2) Hole - 30	0 lb
3) MH Step ML-10-TDS-NCR - 10"	0 lb
Structure Total:	5235 lb

Structure Notes:
1. PER ASTM C-478 SPECIFICATIONS
2. CONCRETE: 4,000 PSI AT 28 DAYS
3. REINFORCEMENT: PER ASTM A615
4. STEPS AT 63 DEGREES
5. HOE 525 FRAME, FLAT GRATE, & CURB HOOD SUPPLIED BY ICAST

Rim: 531.24' Rim to Invert: 4.8' Slack: 1.5" Sump: 1.9" Step Position: 63°

Position	Elev	Angle	Ext. (cw)	Pipe	Pipe OD	Connector	Hole	Horz Size	Up (_)	Offset
Invert 1	526.44'	0°	0"	24" HDPE	27.8"	Hole 30	30"	32.406"	0"	0"
Invert 2	526.44'	197°	99.75"	24" HDPE	27.8"	Hole 30	30"	32.406"	0"	0"
Invert 3										
Invert 4										
Invert 5										
Invert 6										
Invert 7										
Invert 8										

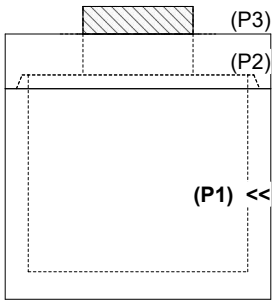

RIGHT-SIDE UP VIEW (int. dimensions)

UPSIDE-DOWN VIEW (int. dimenions)

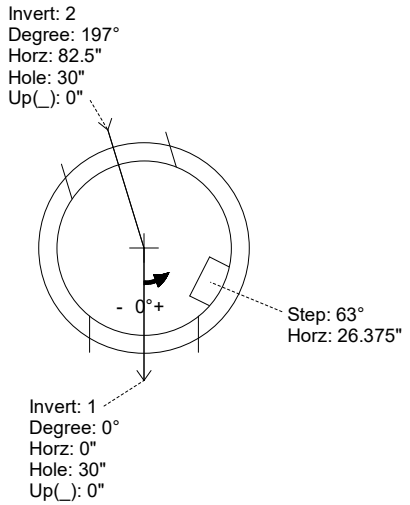

INSIDE WALL DIMENSIONS

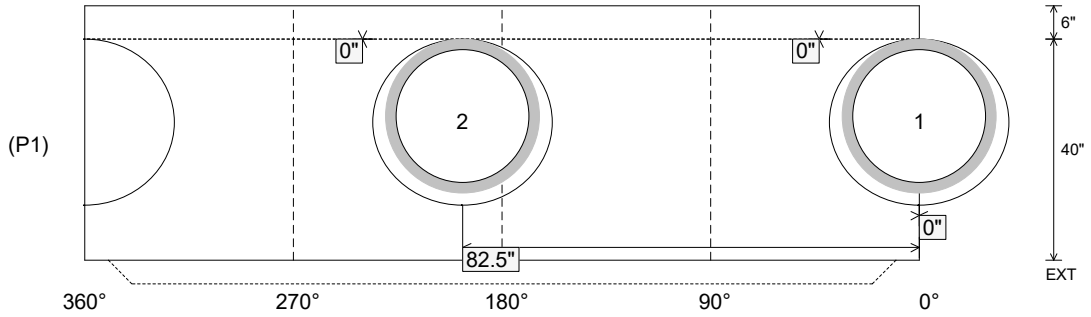

Coating (Int): Coating (Ext):	Seam Up: Tongue Seam Dn: n/a	Wall Thickness: 5" Floor Height: 6"	Height (Int): 40" Height (Ext): 46"	Weight (Net): 3493 lb Volume (Net): 0.89cu.yd

Job Name: 26-2080 - The Cumberland Job Location: Bowling Green, KY Contractor: J & J Concrete & Excavating, LLC	Plant: 100 6/22/2026 6:23:24 PM	Tech: Jared - A PC: E. Bradley	

Structure ID: B2 ST-CI

P1 MH048BA36 MH BASE T/n

P4) 24" x 36" - CASTING HEIGHT - 6"	0 lb
P3) 24" x 36" - GRADE RING F/F - 3"	306 lb
P2) 48" - MH FLAT TOP w/24"x36" Hole F/G - 12"	1300 lb
P1) 48" - MH BASE T/n - 36"	3575 lb
1) CASTING - HOE 525 SET (F/G/H)	442 lb
1) 48" - Conseal CS-102 1.00"	0 lb
2) 24" x 36" - Conseal CS-102 1.00"	0 lb
2) Hole - 20	0 lb
3) MH Step ML-10-TDS-NCR - 10"	0 lb
Structure Total:	5623 lb

Structure Notes:
1. PER ASTM C-478 SPECIFICATIONS
2. CONCRETE: 4,000 PSI AT 28 DAYS
3. REINFORCEMENT: PER ASTM A615
4. STEPS AT 242 DEGREES
5. HOE 525 FRAME, FLAT GRATE, & CURB HOOD SUPPLIED BY ICAST

Rim: 530.35' Rim to Invert: 4.93' Slack: 2.16" Sump: 0" Step Position: 242°

Position	Elev	Angle	Ext. (cw)	Pipe	Pipe OD	Connector	Hole	Horz Size	Up (_)	Offset
Invert 1	525.42'	0°	0"	15" HDPE	17.6"	Hole 20	20"	20.629"	-1.25"	0"
Invert 2	525.42'	152°	76.875"	15" HDPE	17.6"	Hole 20	20"	20.629"	-1.25"	0"
Invert 3										
Invert 4										
Invert 5										
Invert 6										
Invert 7										
Invert 8										

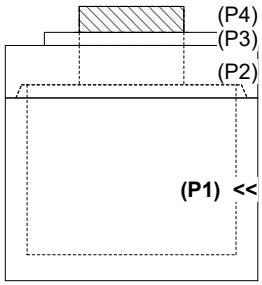

RIGHT-SIDE UP VIEW (int. dimensions)

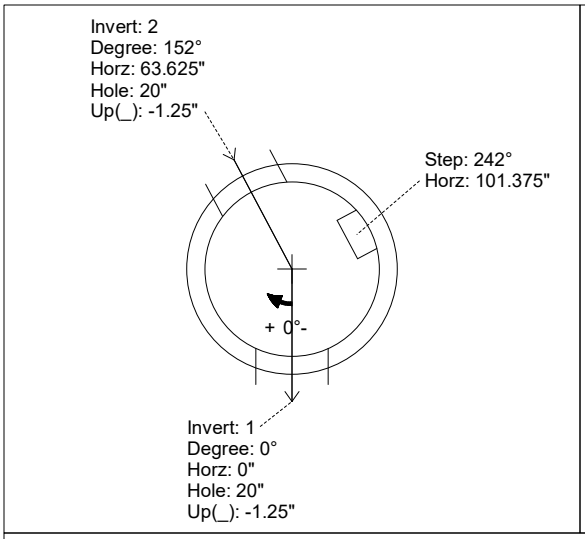

UPSIDE-DOWN VIEW (int. dimenions)

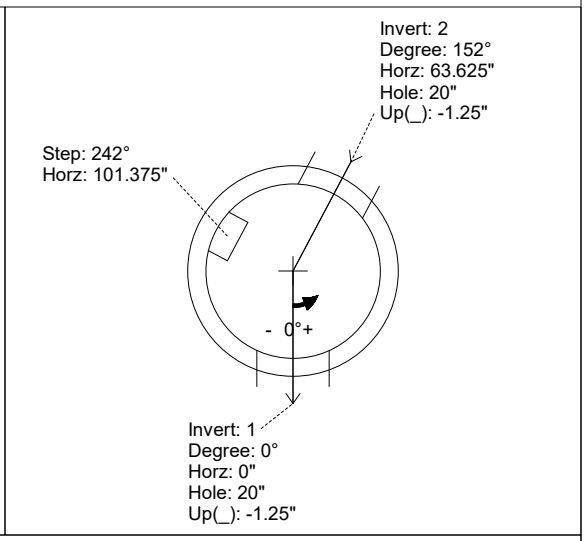

INSIDE WALL DIMENSIONS

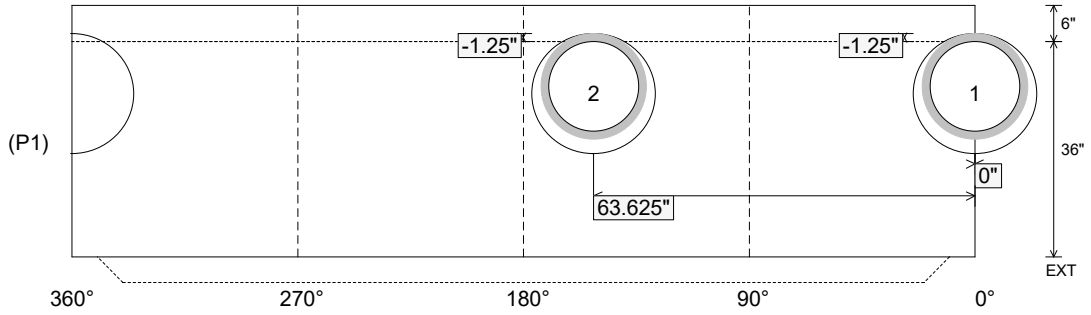

Coating (Int): Coating (Ext):	Seam Up: Tongue Seam Dn: n/a	Wall Thickness: 5" Floor Height: 6"	Height (Int): 36" Height (Ext): 42"	Weight (Net): 3575 lb Volume (Net): 0.91cu.yd

Job Name: 26-2697 - Prestonsburg Yard Vault Job Location: Prestonsburg, KY Contractor: Prestonsburg City Utilities	Plant: 100 6/25/2026 7:04:40 PM	Tech: Jared - F PC: M. Sullivan	

Structure ID: YARD VAULT 2

P2 MH048DHVF MH RISER T/F

P4) 30" x 30" - HATCH (CAST FLUSH) - 3"	100 lb
P3) 48" - MH FLAT TOP w/30"x30" Hole F/G - 12"	1350 lb
P2) 48" - MH RISER T/F - 48"	3287 lb
P1) 48" - P.I.P. BY OTHERS - BTM SLAB F/n - 0"	0 lb
1) HATCH (Alum.) - HALLIDAY W1S 30"x30"	62 lb
2) 48" - Conseal CS-102 1.00" (Double)	0 lb
1) 30" x 30" - Conseal CS-102 1.00" (Double)	0 lb
2) Hole - 10	0 lb
Structure Total:	4799 lb

Structure Notes: .
1. PER ASTM C478 SPECIFICATIONS.
2. CONCRETE = 4,000 PSI AT 28 DAYS.
3. HATCH SUPPLIED BY I-CAST (HALLIDAY W1S 30"x30")(CAST-IN).
.
REINFORCING PER ASTM A615 (GRADE 60).
- TOP SLAB (As .62) #5 BARS AT 6" C.C.E.W.
- RISER (As .12)

Rim: 5' Rim to Invert: 4' Slack: 0" Sump: 12" Step Position:

Position	Elev	Angle	Ext. (cw)	Pipe	Pipe OD	Connector	Hole	Horz Size	Up (_)	Offset
Invert 1	1'	0°	0"	6" PVC SDR35	6.25"	Hole 10	10"	10.074"	10"	0"
Invert 2	1'	180°	91.125"	6" PVC SDR35	6.25"	Hole 10	10"	10.074"	10"	0"
Invert 3										
Invert 4										
Invert 5										
Invert 6										
Invert 7										
Invert 8										

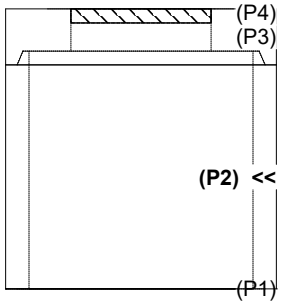

RIGHT-SIDE UP VIEW (int. dimensions)

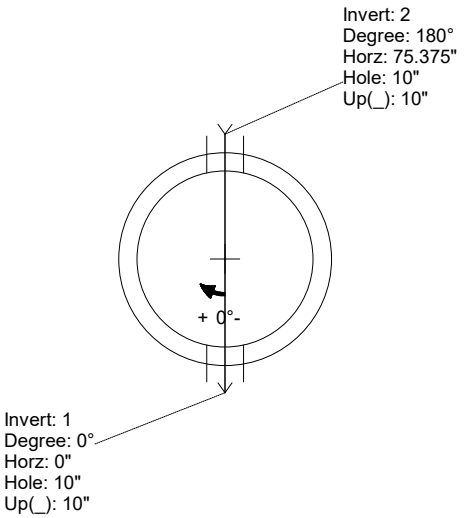

INSIDE WALL DIMENSIONS

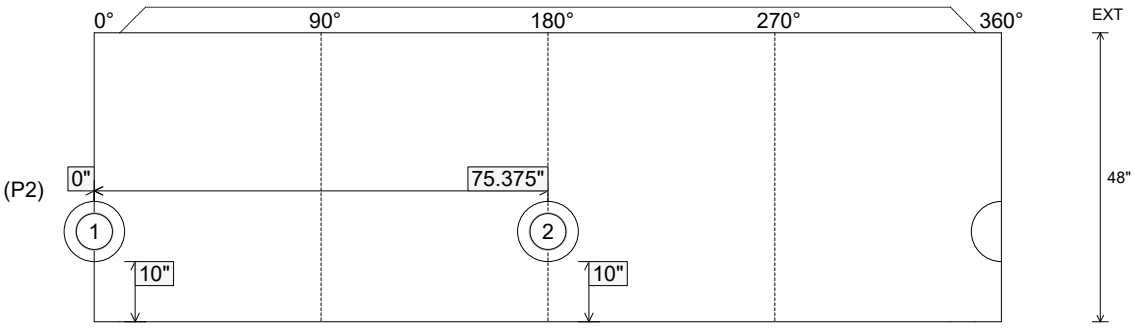

Coating (Int): Coating (Ext):	Seam Up: Tongue Seam Dn: Flat	Wall Thickness: 5" Floor Height: 0"	Height (Int): 48" Height (Ext): 48"	Weight (Net): 3287 lb Volume (Net): 0.84cu.yd

Job Name: 26-2697 - Prestonsburg Yard Vault Job Location: Prestonsburg, KY Contractor: Prestonsburg City Utilities	Plant: 100 6/25/2026 7:04:52 PM	Tech: Jared - F PC: M. Sullivan	

Structure ID: YARD VAULT 2

P3 MH048LD12S **MH FLAT TOP w/30"x30" Hole F/G**

P4) 30" x 30" - HATCH (CAST FLUSH) - 3"	100 lb
P3) 48" - MH FLAT TOP w/30"x30" Hole F/G - 12"	1350 lb
P2) 48" - MH RISER T/F - 48"	3287 lb
P1) 48" - P.I.P. BY OTHERS - BTM SLAB F/n - 0"	0 lb
1) HATCH (Alum.) - HALLIDAY W1S 30"x30"	62 lb
2) 48" - Conseal CS-102 1.00" (Double)	0 lb
1) 30" x 30" - Conseal CS-102 1.00" (Double)	0 lb
2) Hole - 10	0 lb
Structure Total:	4799 lb

Structure Notes: .
1. PER ASTM C478 SPECIFICATIONS.
2. CONCRETE = 4,000 PSI AT 28 DAYS.
3. HATCH SUPPLIED BY I-CAST (HALLIDAY W1S 30"x30")(CAST-IN).
.
REINFORCING PER ASTM A615 (GRADE 60).
- TOP SLAB (As .62) #5 BARS AT 6" C.C.E.W.
- RISER (As .12)

NOTES:
1. PER ASTM C-478 LATEST REVISION
2. CONCRETE: 4,000 PSI AT 28 DAYS.
3. REINFORCEMENT: #5 BAR @ 6" C.C.E.W. PER ASTM A615 (GRADE 60)
5. JOINT SEALANT – 1" CS-102-DOUBLE
6. HATCH: W1S 30"X30" HATCH IS PROVIDED BY ICAST.
7. HATCH TO BE CAST INTO TOP SLAB.

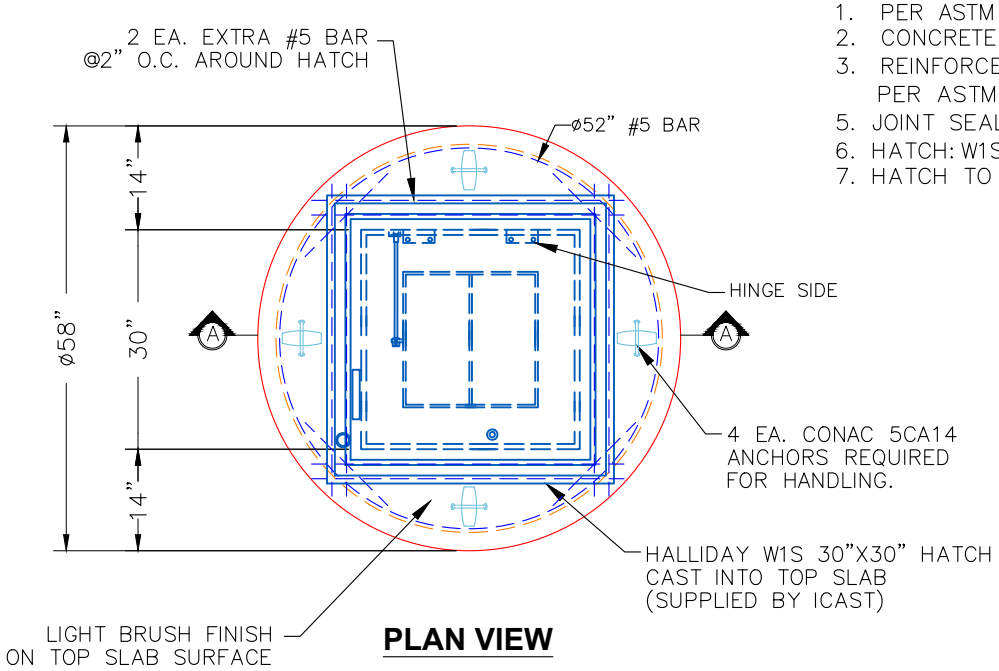

PLAN VIEW

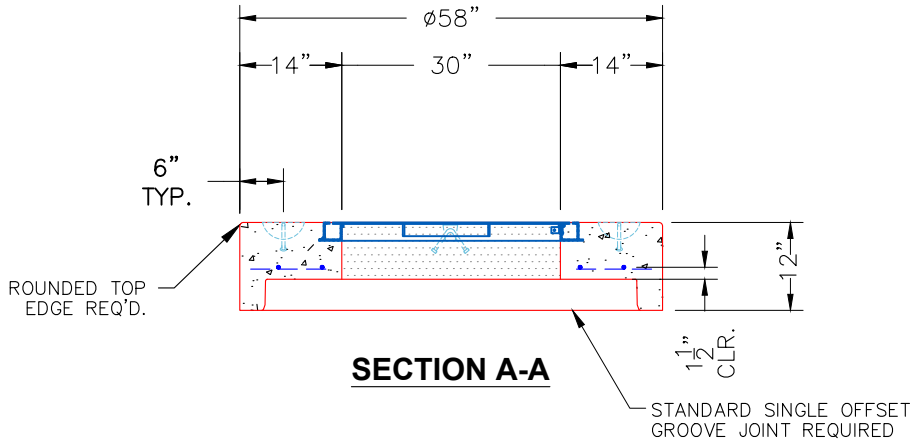

SECTION A-A

Coating (Int): Coating (Ext):	Seam Up: Flat Seam Dn: Groove	Wall Thickness: 5"	Height (Ext): 12"	Weight (Net): 1350 lb Volume (Net): 0.33cu.yd

Job Name: 26-2697 - Prestonsburg Yard Vault Job Location: Prestonsburg, KY Contractor: Prestonsburg City Utilities	Plant: 100 6/25/2026 7:04:40 PM	Tech: Jared - F PC: M. Sullivan	

Structure ID: YARD VAULT 1

P2 MH048DHVF **MH RISER T/F**

P4) 30" x 30" - HATCH (CAST FLUSH) - 3"	100 lb
P3) 48" - MH FLAT TOP w/30"x30" Hole F/G - 12"	1350 lb
P2) 48" - MH RISER T/F - 48"	3287 lb
P1) 48" - P.I.P. BY OTHERS - BTM SLAB F/n - 0"	0 lb
1) HATCH (Alum.) - HALLIDAY W1S 30"x30"	62 lb
2) 48" - Conseal CS-102 1.00" (Double)	0 lb
1) 30" x 30" - Conseal CS-102 1.00" (Double)	0 lb
2) Hole - 10	0 lb
Structure Total:	4799 lb

Structure Notes: .
1. PER ASTM C478 SPECIFICATIONS.
2. CONCRETE = 4,000 PSI AT 28 DAYS.
3. HATCH SUPPLIED BY I-CAST (HALLIDAY W1S 30"x30")(CAST-IN).
.
REINFORCING PER ASTM A615 (GRADE 60).
- TOP SLAB (As .62) #5 BARS AT 6" C.C.E.W.
- RISER (As .12)

Rim: 5' Rim to Invert: 4' Slack: 0" Sump: 12" Step Position:

Position	Elev	Angle	Ext. (cw)	Pipe	Pipe OD	Connector	Hole	Horz Size	Up (_)	Offset
Invert 1	1'	0°	0"	6" PVC SDR35	6.25"	Hole 10	10"	10.074"	10"	0"
Invert 2	1'	180°	91.125"	6" PVC SDR35	6.25"	Hole 10	10"	10.074"	10"	0"
Invert 3										
Invert 4										
Invert 5										
Invert 6										
Invert 7										
Invert 8										

RIGHT-SIDE UP VIEW (int. dimensions)

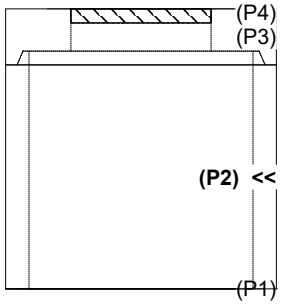

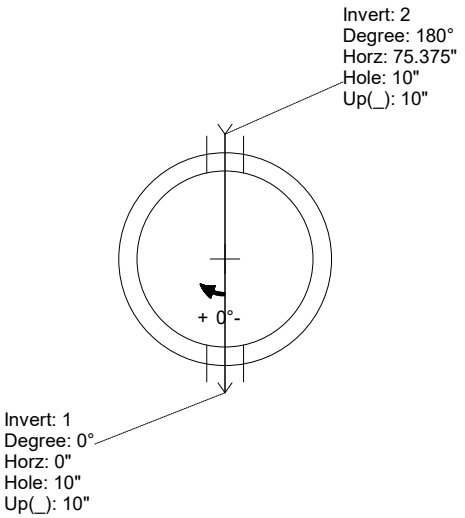

INSIDE WALL DIMENSIONS

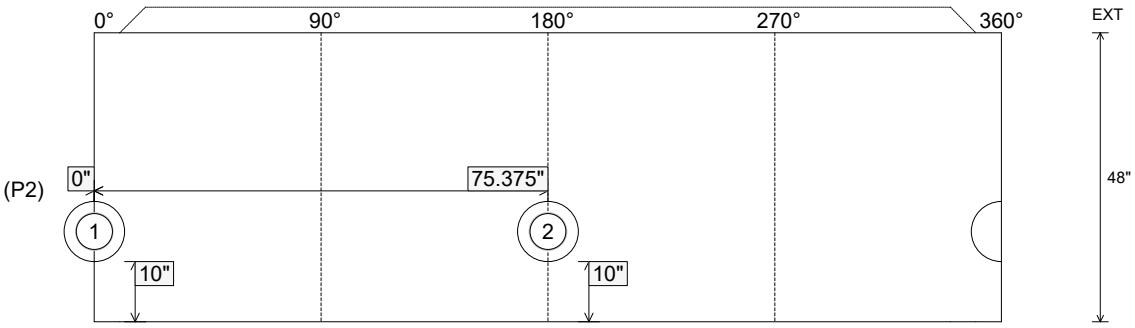

Coating (Int): Coating (Ext):	Seam Up: Tongue Seam Dn: Flat	Wall Thickness: 5" Floor Height: 0"	Height (Int): 48" Height (Ext): 48"	Weight (Net): 3287 lb Volume (Net): 0.84cu.yd

Job Name: 26-2697 - Prestonsburg Yard Vault Job Location: Prestonsburg, KY Contractor: Prestonsburg City Utilities	Plant: 100 6/25/2026 7:04:52 PM	Tech: Jared - F PC: M. Sullivan	

Structure ID: YARD VAULT 1

P3 MH048LD12S **MH FLAT TOP w/30"x30" Hole F/G**

P4) 30" x 30" - HATCH (CAST FLUSH) - 3"	100 lb
P3) 48" - MH FLAT TOP w/30"x30" Hole F/G - 12"	1350 lb
P2) 48" - MH RISER T/F - 48"	3287 lb
P1) 48" - P.I.P. BY OTHERS - BTM SLAB F/n - 0"	0 lb
1) HATCH (Alum.) - HALLIDAY W1S 30"x30"	62 lb
2) 48" - Conseal CS-102 1.00" (Double)	0 lb
1) 30" x 30" - Conseal CS-102 1.00" (Double)	0 lb
2) Hole - 10	0 lb
Structure Total:	4799 lb

Structure Notes: .
1. PER ASTM C478 SPECIFICATIONS.
2. CONCRETE = 4,000 PSI AT 28 DAYS.
3. HATCH SUPPLIED BY I-CAST (HALLIDAY W1S 30"x30")(CAST-IN).
.
REINFORCING PER ASTM A615 (GRADE 60).
- TOP SLAB (As .62) #5 BARS AT 6" C.C.E.W.
- RISER (As .12)

NOTES:
1. PER ASTM C-478 LATEST REVISION
2. CONCRETE: 4,000 PSI AT 28 DAYS.
3. REINFORCEMENT: #5 BAR @ 6" C.C.E.W. PER ASTM A615 (GRADE 60)
5. JOINT SEALANT – 1" CS-102-DOUBLE
6. HATCH: W1S 30"X30" HATCH IS PROVIDED BY ICAST.
7. HATCH TO BE CAST INTO TOP SLAB.

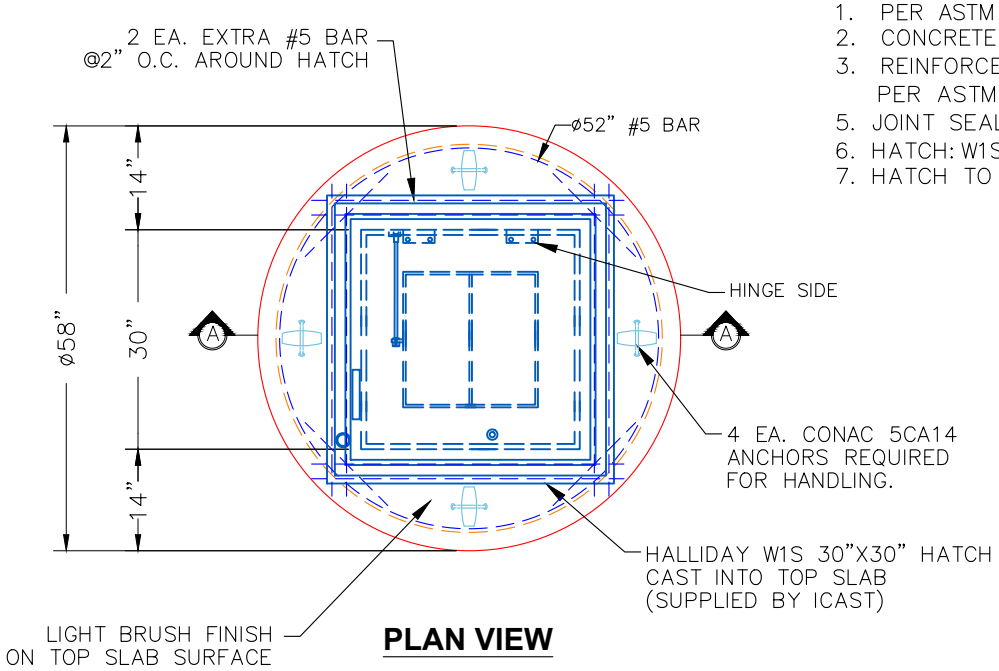

PLAN VIEW

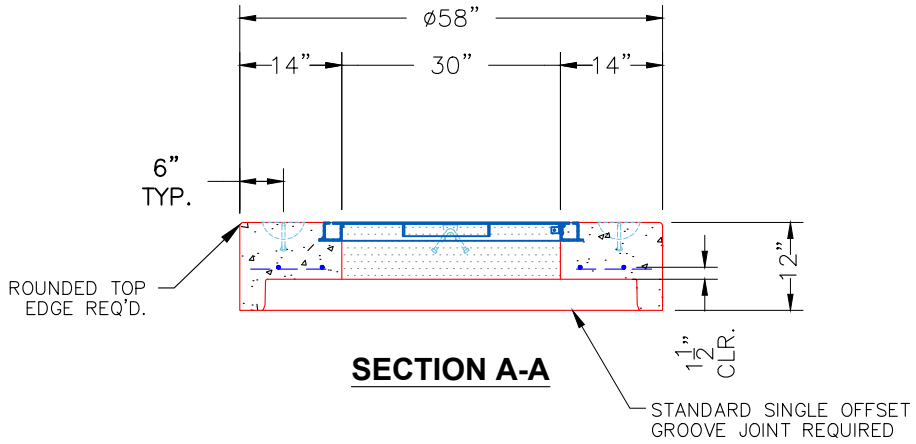

SECTION A-A

Coating (Int): Coating (Ext):	Seam Up: Flat Seam Dn: Groove	Wall Thickness: 5"	Height (Ext): 12"	Weight (Net): 1350 lb Volume (Net): 0.33cu.yd

Job Name: 26-2731 870553 Hampton Inn O'Fallon Job Location: CPU Contractor: Contech Engineering Solutions	Plant: Beaver Dam 6/23/2026 1:17:41 PM	Tech: S. Felletter PC: C. Goff	

Structure ID: 10-CS-4

P4 MH048LD12-30 MH FLAT LID w/30in ECC Hole F/G

P5) 30" - CASTING HEIGHT - 4"	0 lb
P4) 48" - MH FLAT LID w/30in ECC Hole F/G - 12"	1413 lb
P3) 48" - MH RISER T/G - 24"	1677 lb
P2) 48" - MH RISER T/G - 48"	3182 lb
P1) 48" - MH BASE T/n - 36"	3845 lb
1) ASSEMBLY REQUIRED	0 lb
1) CVSTENCILING	0 lb
3) 48" - Conseal CS-102 1.00"	0 lb
2) PSX - 16M NYLO	16 lb
Structure Total:	10133 lb

Structure Notes: .
4" CASTING BY OTHERS
.
LIFTING ANCHORS TO BE INSTALLED ON THE OUTSIDE OF THE STRUCTURE
.
ICAST TO INSTALL THE INTERNALS
.
BASE AND P2 RISER TO BE MECHANICALLY ATTACHED PRIOR TO INSTALLATION OF INTERNALS
.
CONTECH'S LOGO AS WELL AS THE INLET AND OUTLET MUST BE STENCILED ONTO THE STRUCTURE

NOTES:
1. MANUFACTURED TO ASTM C-478 (LATEST REVISION).
2. CONCRETE: 4,000 PSI AT 28 DAYS.
3. REINFORCING: #5 BAR @ 6" C.C. E.W. (GRADE 60).

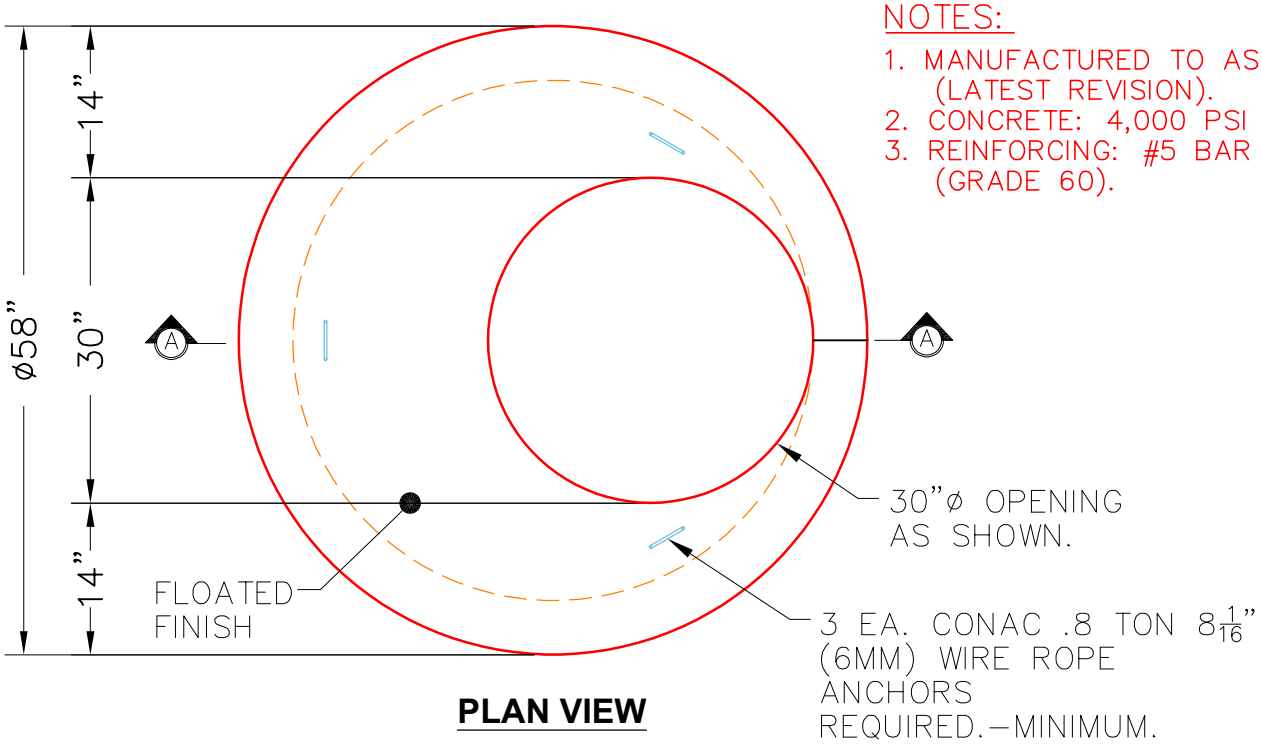

PLAN VIEW

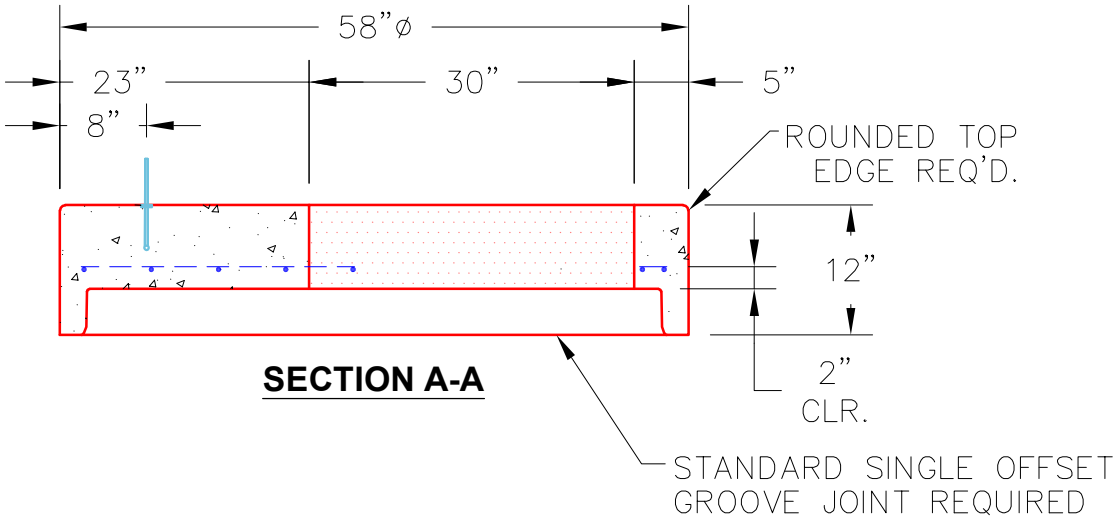

SECTION A-A

Coating (Int): Coating (Ext):	Seam Up: Flat Seam Dn: Groove	Wall Thickness: 5"	Height (Ext): 12"	Weight (Net): 1413 lb Volume (Net): 0.36cu.yd

Job Name: 25-1401 Irwin Landing Ph. 1 Job Location: Murfreesboro, TN Contractor: Bear Construction LLC	Plant: Beaver Dam 6/9/2026 10:40:20 AM	Tech: S. Felletter PC: Erica Bradley	

Structure ID: R14

P2 MH048LD12-28SQ MH FLAT TOP w/28"x28" Hole F/G

P3) 28" x 28" - CASTING HEIGHT - 5"	0 lb
P2) 48" - MH FLAT TOP w/28"x28" Hole F/G - 12"	1368 lb
P1) 48" - MH BASE Custom Ht T/n - 71"	5591 lb
1) 48" - STORM INVERT CHANNEL - 1/4 HEIGHT	1075 lb
1) CASTING - JBS 3104-V SINGLE SET	250 lb
1) 48" - Conseal CS-102 1.00"	0 lb
1) 28" x 28" - Conseal CS-102 1.00"	0 lb
3) Hole - 26	0 lb
6) MH Step ML-10-TDS-NCR - 10"	0 lb
Structure Total:	8284 lb

Structure Notes: .
1. PER ASTM C478 SPECIFICATIONS.
2. CONCRETE = 4,000 PSI AT 28 DAYS.
3. CASTING BY ICAST (JBS-3104 SINGLE SET).
.
REINFORCING PER ASTM A615 (GRADE 60).
- TOP SLAB (As .62) #5 BARS AT 6" C.C.E.W.
- RISER/WALLS (As .12)
- FLOOR (As .31) #5 BARS AT 12" C.C.E.W.

NOTES:
1. MANUFACTURED TO ASTM C-478 (LATEST REVISION).
2. CONCRETE: 4,000 PSI AT 28 DAYS.
3. REINFORCING: #5 BAR @ 6" C.C. E.W. (GRADE 60).

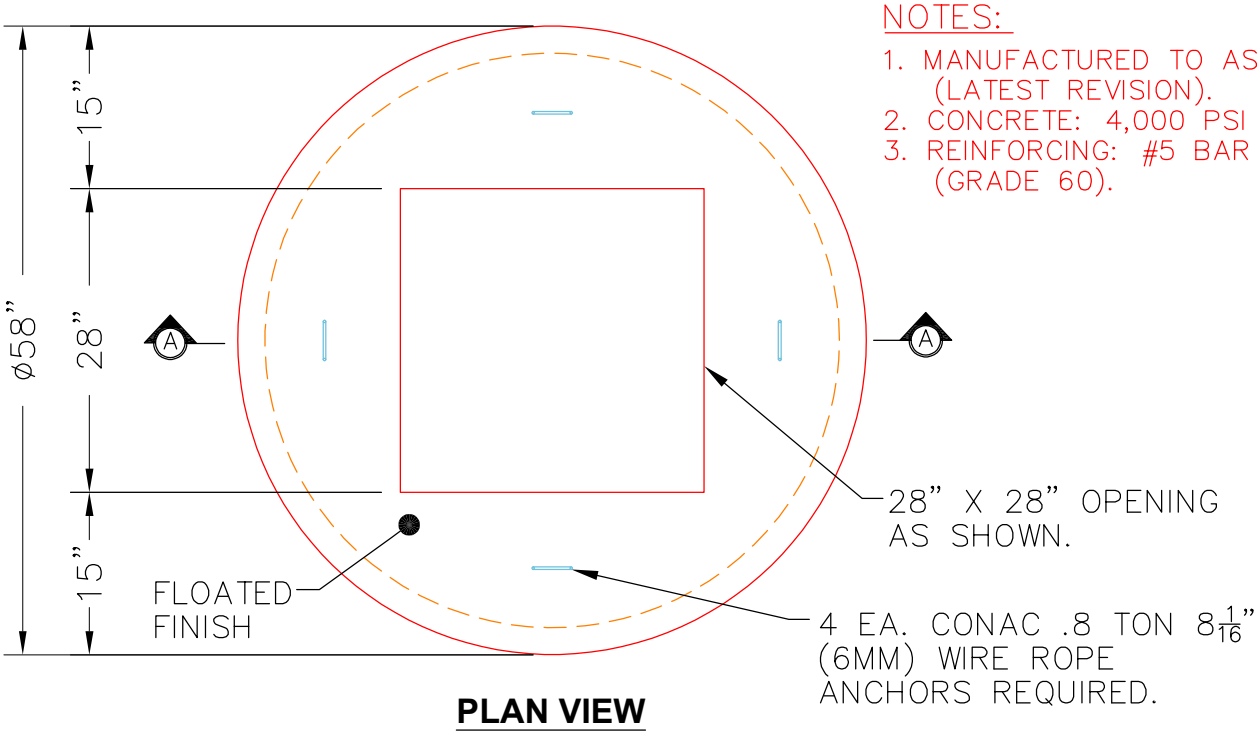

PLAN VIEW

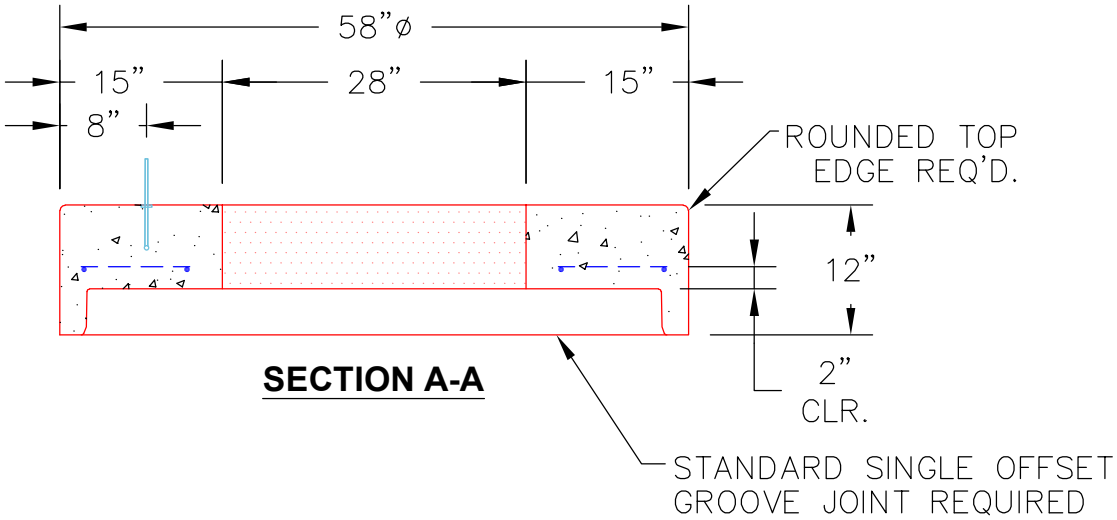

SECTION A-A

Coating (Int): Coating (Ext):	Seam Up: Flat Seam Dn: Groove	Wall Thickness: 5"	Height (Ext): 12"	Weight (Net): 1368 lb Volume (Net): 0.35cu.yd

Job Name: 25-1401 Irwin Landing Ph. 1 Job Location: Murfreesboro, TN Contractor: Bear Construction LLC	Plant: Beaver Dam 6/9/2026 10:37:01 AM	Tech: S. Felletter PC: Erica Bradley	

Structure ID: R14

P1 MH048BAVF **MH BASE Custom Ht T/n**

P3) 28" x 28" - CASTING HEIGHT - 5"	0 lb
P2) 48" - MH FLAT TOP w/28"x28" Hole F/G - 12"	1368 lb
P1) 48" - MH BASE Custom Ht T/n - 71"	5591 lb
1) 48" - STORM INVERT CHANNEL - 1/4 HEIGHT	1075 lb
1) CASTING - JBS 3104-V SINGLE SET	250 lb
1) 48" - Conseal CS-102 1.00"	0 lb
1) 28" x 28" - Conseal CS-102 1.00"	0 lb
3) Hole - 26	0 lb
6) MH Step ML-10-TDS-NCR - 10"	0 lb
Structure Total:	8284 lb

Structure Notes: .
1. PER ASTM C478 SPECIFICATIONS.
2. CONCRETE = 4,000 PSI AT 28 DAYS.
3. CASTING BY ICAST (JBS-3104 SINGLE SET).
.
REINFORCING PER ASTM A615 (GRADE 60).
- TOP SLAB (As .62) #5 BARS AT 6" C.C.E.W.
- RISER/WALLS (As .12)
- FLOOR (As .31) #5 BARS AT 12" C.C.E.W.

Rim: 575.67' Rim to Invert: 7.17' Slack: 0.54" Sump: 2.5" Step Position: 270°

Position	Elev	Angle	Ext. (cw)	Pipe	Pipe OD	Connector	Hole	Horz Size	Up (_)	Offset
Invert 1	568.5'	0°	0"	18" RCP B WALL	23"	Hole 26	26"	27.476"	0"	0"
Invert 2	571.87'	90°	45.553"	18" RCP B WALL	23"	Hole 26	26"	27.476"	40.44"	0"
Invert 3	568.5'	180°	91.106"	18" RCP B WALL	23"	Hole 26	26"	27.476"	0"	0"
Invert 4										
Invert 5										
Invert 6										
Invert 7										
Invert 8										

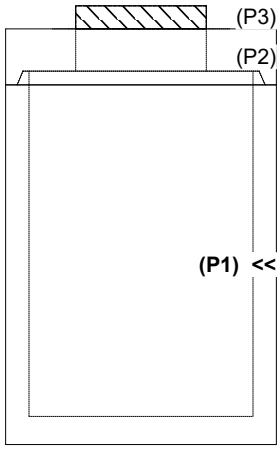

RIGHT-SIDE UP VIEW (int. dimensions)

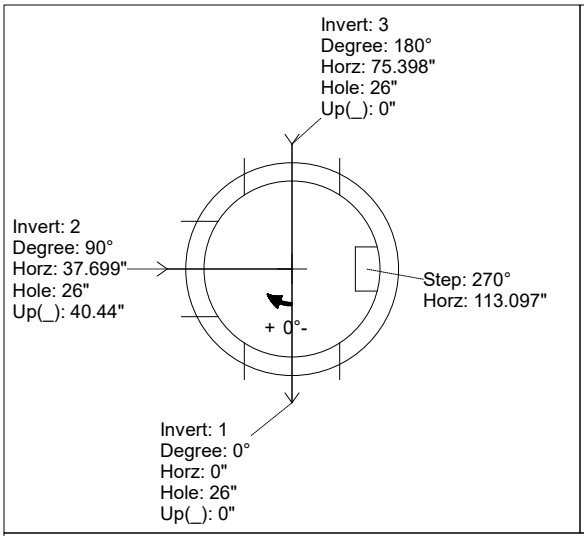

UPSIDE-DOWN VIEW (int. dimenions)

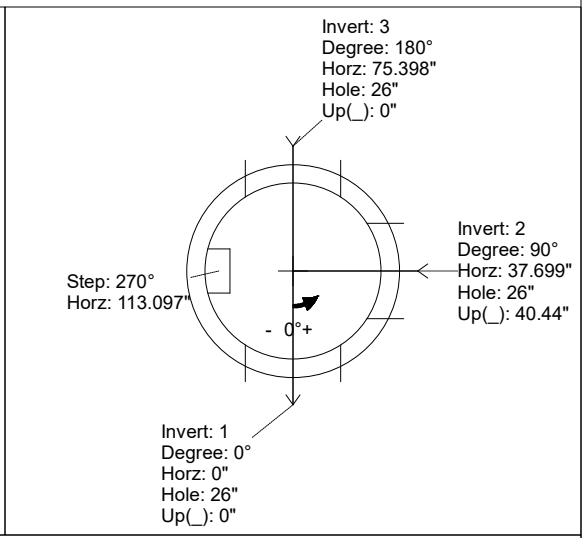

INSIDE WALL DIMENSIONS

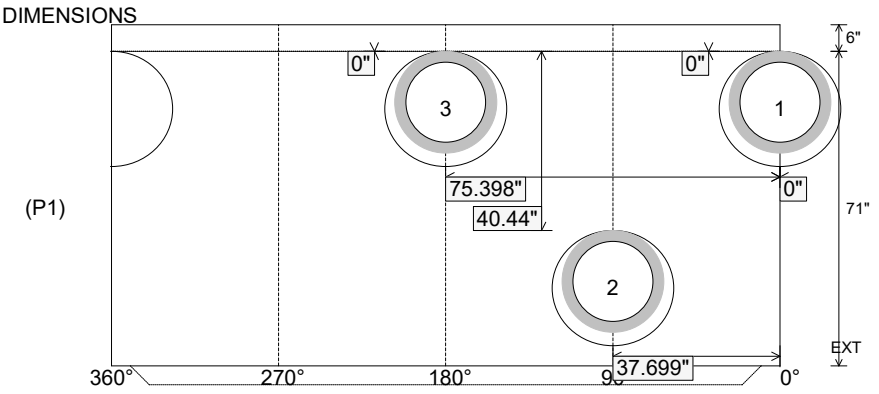

Coating (Int): Coating (Ext):	Seam Up: Tongue Seam Dn: n/a	Wall Thickness: 5" Floor Height: 6"	Height (Int): 71" Height (Ext): 77"	Weight (Net): 5591 lb Volume (Net): 1.43cu.yd

Job Name: 25-1401 Irwin Landing Ph. 1 Job Location: Murfreesboro, TN Contractor: Bear Construction LLC	Plant: Beaver Dam 6/9/2026 10:37:01 AM	Tech: S. Felletter PC: Erica Bradley	

Structure ID: R14

P1 MH048BAVF **MH BASE Custom Ht T/n**

P3) 28" x 28" - CASTING HEIGHT - 5"	0 lb
P2) 48" - MH FLAT TOP w/28"x28" Hole F/G - 12"	1368 lb
P1) 48" - MH BASE Custom Ht T/n - 71"	5591 lb
1) 48" - STORM INVERT CHANNEL - 1/4 HEIGHT	1075 lb
1) CASTING - JBS 3104-V SINGLE SET	250 lb
1) 48" - Conseal CS-102 1.00"	0 lb
1) 28" x 28" - Conseal CS-102 1.00"	0 lb
3) Hole - 26	0 lb
6) MH Step ML-10-TDS-NCR - 10"	0 lb
Structure Total:	8284 lb

Structure Notes: .
1. PER ASTM C478 SPECIFICATIONS.
2. CONCRETE = 4,000 PSI AT 28 DAYS.
3. CASTING BY ICAST (JBS-3104 SINGLE SET).
.
REINFORCING PER ASTM A615 (GRADE 60).
- TOP SLAB (As .62) #5 BARS AT 6" C.C.E.W.
- RISER/WALLS (As .12)
- FLOOR (As .31) #5 BARS AT 12" C.C.E.W.

Invert channel drawing
1/4 Height storm invert

Rim: 575.67' Rim to Invert: 7.17' Slack: 0.54" Sump: 2.5" Step Position: 270°

Position	Elev	Angle	Ext. (cw)	Pipe	Pipe OD	Connector	Hole	Horz Size	Up (_)	Offset
Invert 1	568.5'	0°	0"	18" RCP B WALL	23"	Hole 26	26"	27.476"	0"	0"
Invert 2	571.87'	90°	45.553"	18" RCP B WALL	23"	Hole 26	26"	27.476"	40.44"	0"
Invert 3	568.5'	180°	91.106"	18" RCP B WALL	23"	Hole 26	26"	27.476"	0"	0"
Invert 4										
Invert 5										
Invert 6										
Invert 7										
Invert 8										

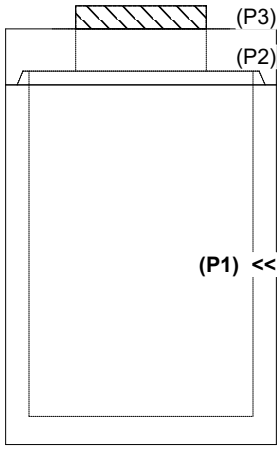

RIGHT-SIDE UP VIEW (int. dimensions)

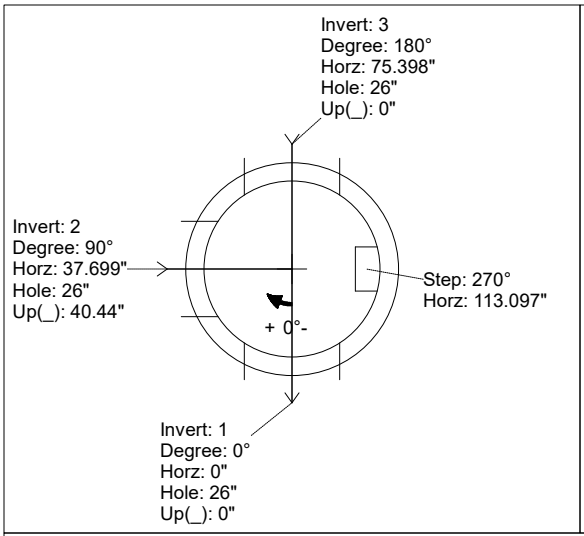

UPSIDE-DOWN VIEW (int. dimenions)

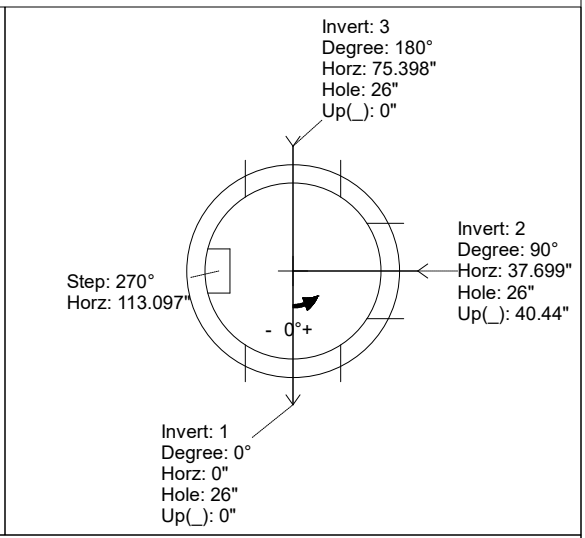

INSIDE WALL DIMENSIONS

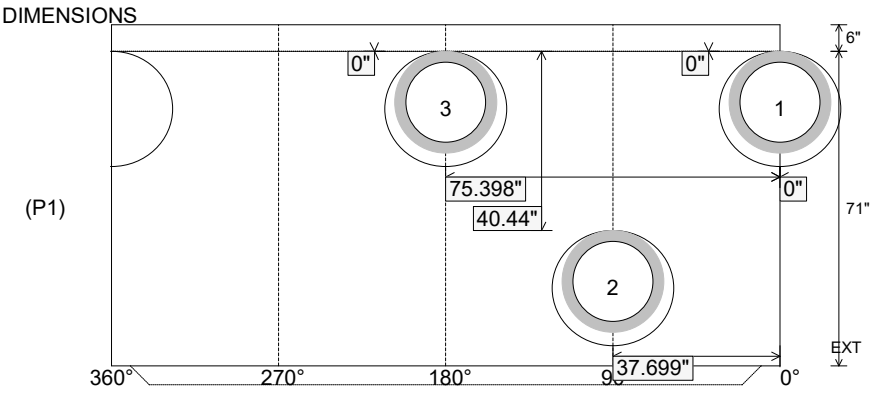

Coating (Int): Coating (Ext):	Seam Up: Tongue Seam Dn: n/a	Wall Thickness: 5" Floor Height: 6"	Height (Int): 71" Height (Ext): 77"	Weight (Net): 5591 lb Volume (Net): 1.43cu.yd

Job Name: 25-1401 Irwin Landing Ph. 1 Job Location: Murfreesboro, TN Contractor: Bear Construction LLC	Plant: Beaver Dam 6/9/2026 10:37:00 AM	Tech: S. Felletter PC: Erica Bradley	

Structure ID: R13

P1 MH048BAVF **MH BASE Custom Ht T/n**

P3) 28" x 28" - CASTING HEIGHT - 5"	0 lb
P2) 48" - MH FLAT TOP w/28"x28" Hole F/G - 12"	1368 lb
P1) 48" - MH BASE Custom Ht T/n - 65.5"	5206 lb
1) 48" - STORM INVERT CHANNEL - 1/4 HEIGHT	1075 lb
1) CASTING - JBS 3104-V SINGLE SET	250 lb
1) 48" - Conseal CS-102 1.00"	0 lb
1) 28" x 28" - Conseal CS-102 1.00"	0 lb
3) Hole - 26	0 lb
5) MH Step ML-10-TDS-NCR - 10"	0 lb
Structure Total:	7899 lb

Structure Notes: .
1. PER ASTM C478 SPECIFICATIONS.
2. CONCRETE = 4,000 PSI AT 28 DAYS.
3. CASTING BY ICAST (JBS-3104 SINGLE SET).
.
REINFORCING PER ASTM A615 (GRADE 60).
- TOP SLAB (As .62) #5 BARS AT 6" C.C.E.W..
- RISER/WALLS (As .12)
- FLOOR (As .31) #5 BARS AT 12" C.C.E.W.

Rim: 574.67' Rim to Invert: 6.67' Slack: 0.04" Sump: 2.5" Step Position: 67°

Position	Elev	Angle	Ext. (cw)	Pipe	Pipe OD	Connector	Hole	Horz Size	Up (_)	Offset
Invert 1	568'	0°	0"	18" RCP B WALL	23"	Hole 26	26"	27.476"	0"	0"
Invert 2	570.75'	134°	67.823"	18" RCP B WALL	23"	Hole 26	26"	27.476"	33"	0"
Invert 3	568'	226°	114.389"	18" RCP B WALL	23"	Hole 26	26"	27.476"	0"	0"
Invert 4										
Invert 5										
Invert 6										
Invert 7										
Invert 8										

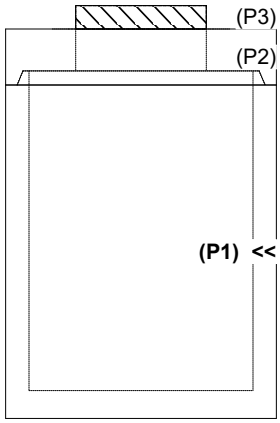

RIGHT-SIDE UP VIEW (int. dimensions)

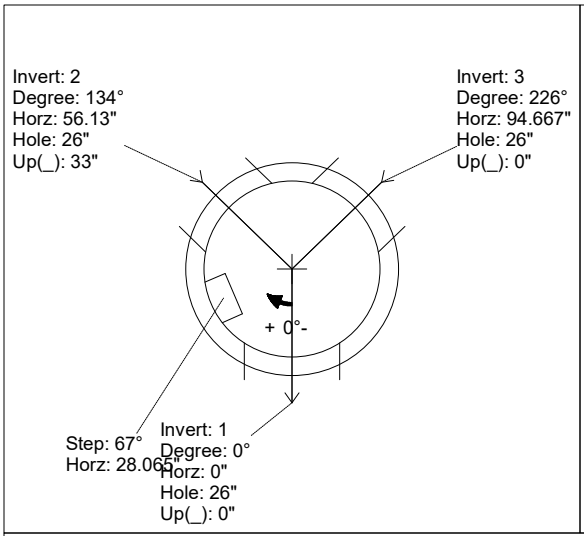

UPSIDE-DOWN VIEW (int. dimenions)

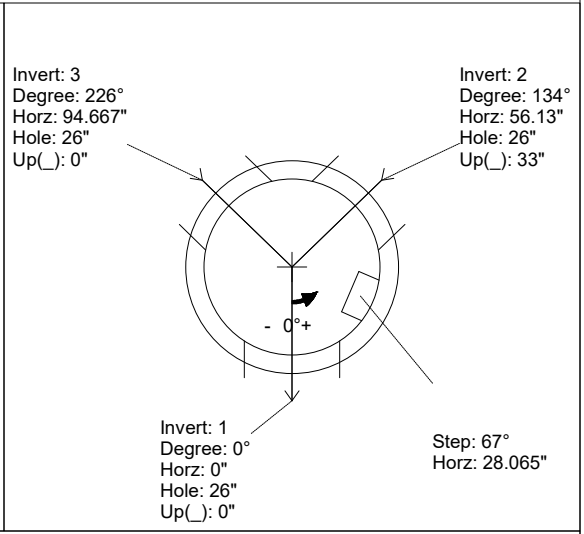

INSIDE WALL DIMENSIONS

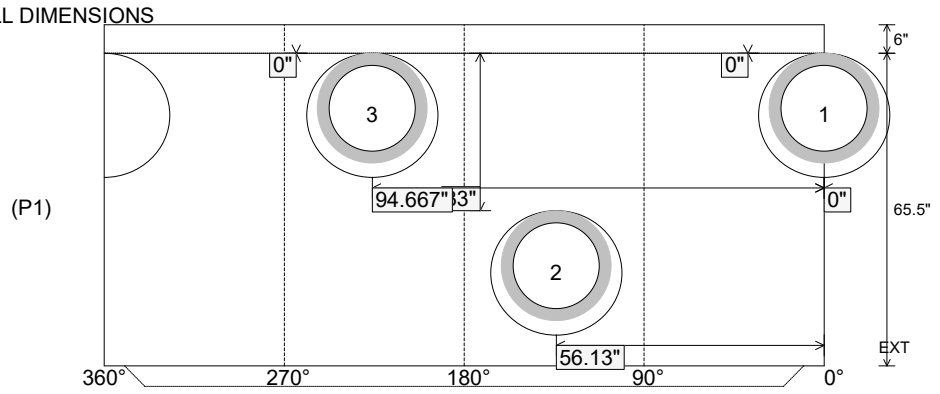

Coating (Int): Coating (Ext):	Seam Up: Tongue Seam Dn: n/a	Wall Thickness: 5" Floor Height: 6"	Height (Int): 65.5" Height (Ext): 71.5"	Weight (Net): 5206 lb Volume (Net): 1.33cu.yd

Job Name: 25-1401 Irwin Landing Ph. 1 Job Location: Murfreesboro, TN Contractor: Bear Construction LLC	Plant: Beaver Dam 6/9/2026 10:37:00 AM	Tech: S. Felletter PC: Erica Bradley	

Structure ID: R13

P1 MH048BAVF **MH BASE Custom Ht T/n**

P3) 28" x 28" - CASTING HEIGHT - 5"	0 lb
P2) 48" - MH FLAT TOP w/28"x28" Hole F/G - 12"	1368 lb
P1) 48" - MH BASE Custom Ht T/n - 65.5"	5206 lb
1) 48" - STORM INVERT CHANNEL - 1/4 HEIGHT	1075 lb
1) CASTING - JBS 3104-V SINGLE SET	250 lb
1) 48" - Conseal CS-102 1.00"	0 lb
1) 28" x 28" - Conseal CS-102 1.00"	0 lb
3) Hole - 26	0 lb
5) MH Step ML-10-TDS-NCR - 10"	0 lb
Structure Total:	7899 lb

Structure Notes: .
1. PER ASTM C478 SPECIFICATIONS.
2. CONCRETE = 4,000 PSI AT 28 DAYS.
3. CASTING BY ICAST (JBS-3104 SINGLE SET).
.
REINFORCING PER ASTM A615 (GRADE 60).
- TOP SLAB (As .62) #5 BARS AT 6" C.C.E.W..
- RISER/WALLS (As .12)
- FLOOR (As .31) #5 BARS AT 12" C.C.E.W.

Invert channel drawing
1/4 Height storm invert

Rim: 574.67' Rim to Invert: 6.67' Slack: 0.04" Sump: 2.5" Step Position: 67°

Position	Elev	Angle	Ext. (cw)	Pipe	Pipe OD	Connector	Hole	Horz Size	Up (_)	Offset
Invert 1	568'	0°	0"	18" RCP B WALL	23"	Hole 26	26"	27.476"	0"	0"
Invert 2	570.75'	134°	67.823"	18" RCP B WALL	23"	Hole 26	26"	27.476"	33"	0"
Invert 3	568'	226°	114.389"	18" RCP B WALL	23"	Hole 26	26"	27.476"	0"	0"
Invert 4										
Invert 5										
Invert 6										
Invert 7										
Invert 8										

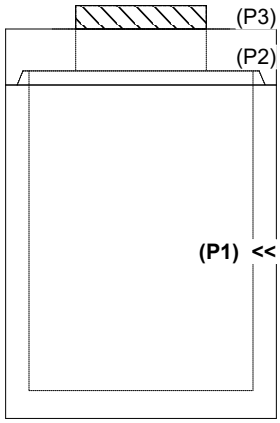

RIGHT-SIDE UP VIEW (int. dimensions)

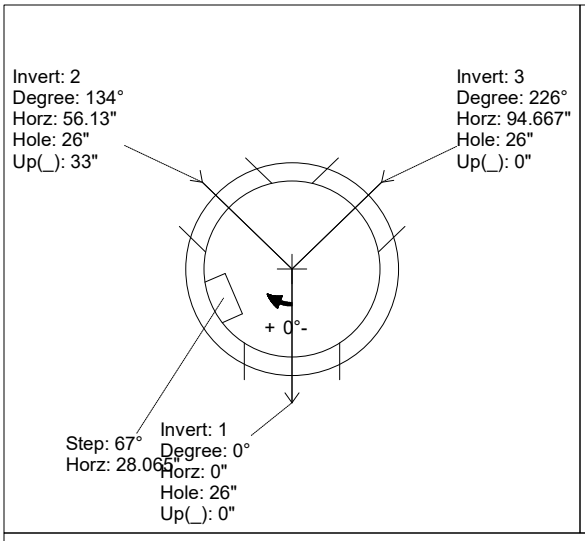

UPSIDE-DOWN VIEW (int. dimenions)

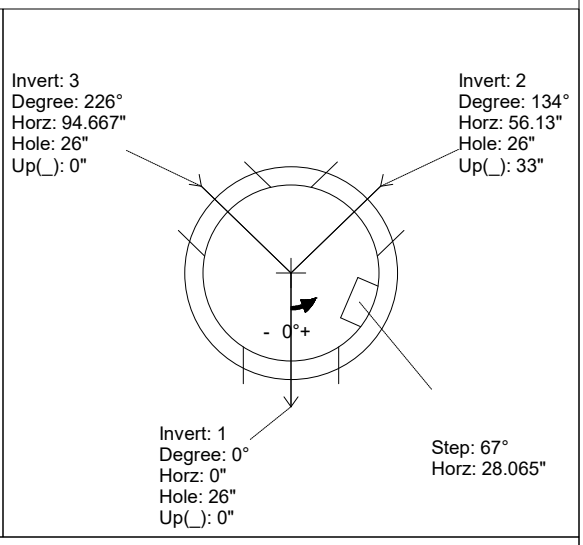

INSIDE WALL DIMENSIONS

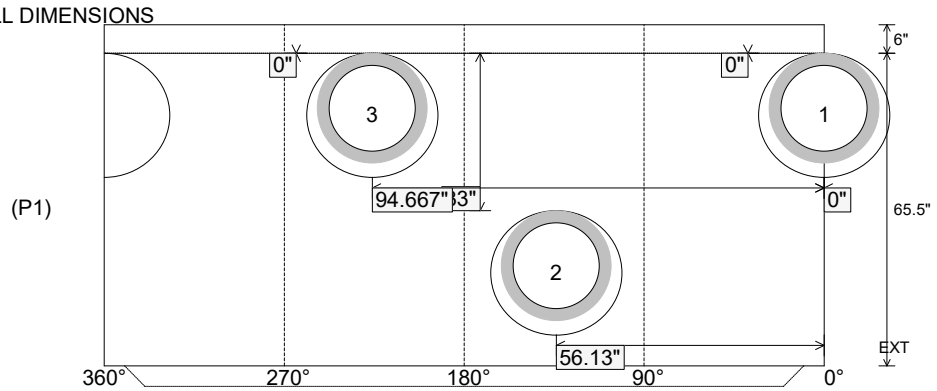

Coating (Int): Coating (Ext):	Seam Up: Tongue Seam Dn: n/a	Wall Thickness: 5" Floor Height: 6"	Height (Int): 65.5" Height (Ext): 71.5"	Weight (Net): 5206 lb Volume (Net): 1.33cu.yd

Job Name: 25-2952 - KYTC Jefferson Co Call 106 (251315) Job Location: Indiana, KY Contractor: Louisville Paving and Construction	Plant: 100 6/12/2026 3:09:39 PM	Tech: J. Horsley - A PC: J. Jarvis	

Structure ID: 22

P1 MH048BAVF **MH BASE Custom Ht T/n**

P3) 24" - CASTING HEIGHT - 4"	0 lb
P2) 48" - MH FLAT LID w/24in ECC Hole F/G - 12"	1561 lb
P1) 48" - MH BASE Custom Ht T/n - 44"	4024 lb
1) 48" - Conseal CS-102 1.00"	0 lb
1) 24" - Conseal CS-102 1.00"	0 lb
2) Hole - 20	0 lb
1) Hole - 18	0 lb
3) MH Step ML-10-TDS-NCR - 10"	0 lb
Structure Total:	5585 lb

Structure Notes:

** KYTC STATE PROJECT **

1. PER KYTC MANHOLE TYPE A / ASTM C-478 SPECS
2. CONCRETE: 4,000 PSI AT 28 DAYS
3. REINFORCEMENT: PER ASTM A615
4. NO STORM INVERT
5. STEPS AT 90 DEGREES
6. HOE KY-206 FRAME & COVER "STORM" SUPPLIED BY OTHERS

Rim: 564.34' Rim to Invert: 4.75' Slack: 0" Sump: 3" Step Position: 90°

Position	Elev	Angle	Ext. (cw)	Pipe	Pipe OD	Connector	Hole	Horz Size	Up (_)	Offset
Invert 1	559.59'	0°	0"	15" HDPE	17.6"	Hole 20	20"	20.629"	0.5"	0"
Invert 2	559.59'	180°	91.125"	15" HDPE	17.6"	Hole 20	20"	20.629"	0.5"	0"
Invert 3	559.59'	240°	121.5"	12" HDPE	14.5"	Hole 18	18"	18.451"	0"	0"
Invert 4										
Invert 5										
Invert 6										
Invert 7										
Invert 8										

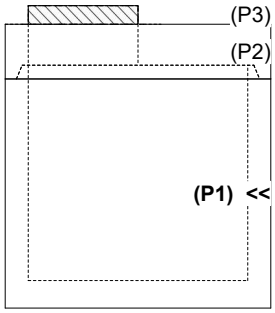

RIGHT-SIDE UP VIEW (int. dimensions)

UPSIDE-DOWN VIEW (int. dimenions)

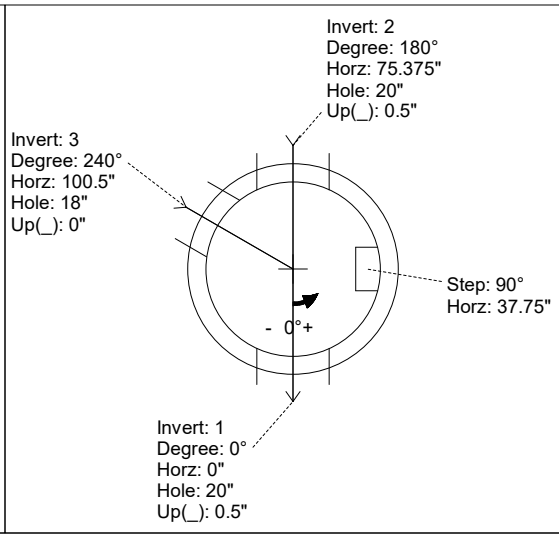

INSIDE WALL DIMENSIONS

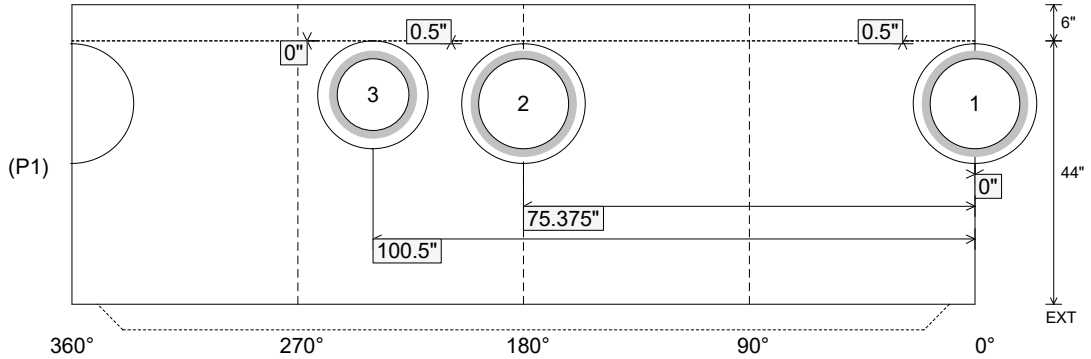

Coating (Int): Coating (Ext):	Seam Up: Tongue Seam Dn: n/a	Wall Thickness: 5" Floor Height: 6"	Height (Int): 44" Height (Ext): 50"	Weight (Net): 4024 lb Volume (Net): 1.03cu.yd

Job Name: 25-3575 - Berry Global North Parking Lot Consolidation Job Location: Evansville, IN 47710 Contractor: Deig Bros Lumber & Construction Co, Inc.	Plant: 100 6/16/2026 8:47:29 PM	Tech: Jared - F PC: A. Chambers	

Structure ID: CI106

P1 MH048BA66 MH BASE T/n

P3) 24" x 36" - CASTING HEIGHT - 6"	0 lb
P2) 48" - MH FLAT TOP w/24"x36" Hole F/G - 12"	1300 lb
P1) 48" - MH BASE T/n - 66"	5776 lb
1) CASTING - HOE 525 SET FLAT GRATE (F/G/H)	442 lb
1) CASTING - BMP SNOUT 18R w/ KIT	25 lb
1) 48" - Conseal CS-102 1.00"	0 lb
1) 24" x 36" - Conseal CS-102 1.00"	0 lb
1) Hole - 22	0 lb
Structure Total:	7543 lb

Structure Notes: .
1. PER ASTM C478 SPECIFICATIONS.
2. CONCRETE = 4,000 PSI AT 28 DAYS.
3. NO STEPS AND NO INVERT CHANNEL.
4. CASTING BY ICAST (HOE 525 SET FLAT GRATE (F/G/H)).
5. 18R SNOUT SUPPLIED BY ICAST.

.
REINFORCING PER ASTM A615 (GRADE 60).
- TOP SLAB (As .62) #5 BARS AT 6" C.C.E.W..
- RISER/WALLS (As .12)
- FLOOR (As .31) #5 BARS AT 12" C.C.E.W.

Rim: 385.64' Rim to Invert: 3.51' Slack: 0.12" Sump: 42" Step Position:

Position	Elev	Angle	Ext. (cw)	Pipe	Pipe OD	Connector	Hole	Horz Size	Up (_)	Offset
Invert 1	382.13'	0°	0"	15" RCP B WALL	19.5"	Hole 22	22"	22.854"	39.75"	0"
Invert 2										
Invert 3										
Invert 4										
Invert 5										
Invert 6										
Invert 7										
Invert 8										

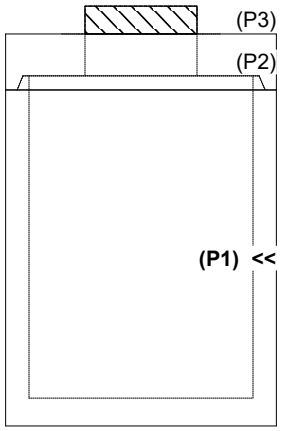

RIGHT-SIDE UP VIEW (int. dimensions)

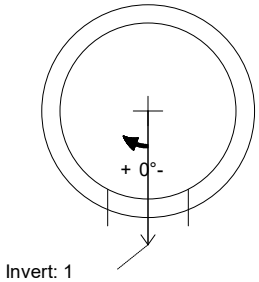

Invert: 1
Degree: 0°
Horz: 0"
Hole: 22"
Up(_): 39.75"

UPSIDE-DOWN VIEW (int. dimenions)

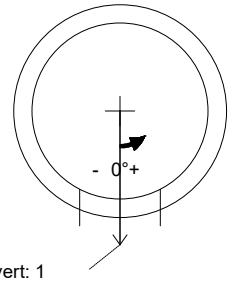

Invert: 1
Degree: 0°
Horz: 0"
Hole: 22"
Up(_): 39.75"

INSIDE WALL DIMENSIONS

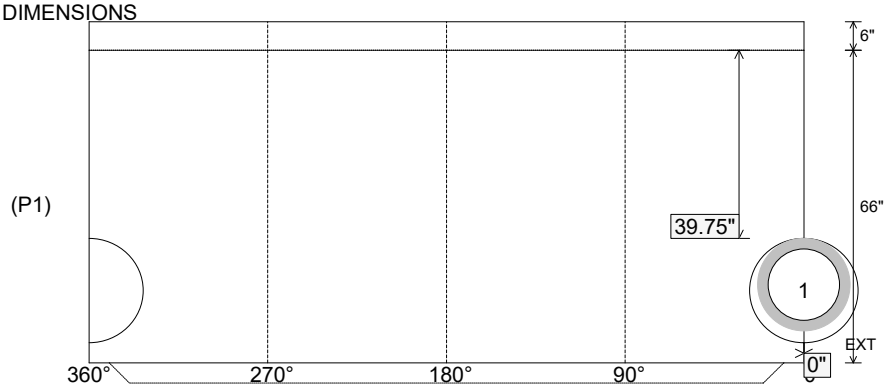

Coating (Int): Coating (Ext):	Seam Up: Tongue Seam Dn: n/a	Wall Thickness: 5" Floor Height: 6"	Height (Int): 66" Height (Ext): 72"	Weight (Net): 5776 lb Volume (Net): 1.48cu.yd

Job Name: 26-1051 - HAMPTON 500 Job Location: Hampton Station, TN Contractor: TVA	Plant: 100 6/18/2026 11:09:49 AM	Tech: Jared - F PC: A. Chambers	

Structure ID: 16 (20)

P1 MH048BA30 MH BASE F/n

P4) 24" - CASTING HEIGHT - 1.25"	0 lb
P3) 24" - GRADE RING F/F - 6"	405 lb
P2) 48" - MH FLAT TOP w/ 24" Center Hole F/F - 7"	1700 lb
P1) 48" - MH BASE F/n - 30"	3229 lb
1) CASTING - EJ 6488 O Beehive Grate	250 lb
1) 48" - Conseal CS-102 1.00"	0 lb
2) 24" - Conseal CS-102 1.00"	0 lb
1) Hole - 24	0 lb
2) MH Step ML-10-TDS-NCR - 10"	0 lb
Structure Total:	5584 lb

Structure Notes: .
1. PER ASTM C478 SPECIFICATIONS.
2. CONCRETE = 4,000 PSI AT 28 DAYS.
3. NO INVERT CHANNEL.
4. CASTING BY ICAST (EJ 6488 O BEEHIVE GRATE).

.
REINFORCING PER ASTM A615 (GRADE 60).
- TOP SLAB (As .62) #5 BARS AT 6" C.C.E.W..
- RISER/WALLS (As .12)
- FLOOR (As .31) #5 BARS AT 12" C.C.E.W.

Rim: 506.8' Rim to Invert: 3.6' Slack: 0.55" Sump: 1.6" Step Position: 180°

Position	Elev	Angle	Ext. (cw)	Pipe	Pipe OD	Connector	Hole	Horz Size	Up (_)	Offset
Invert 1	503.2'	0°	0"	18" HDPE	21.2"	Hole 24	24"	25.133"	0"	0"
Invert 2										
Invert 3										
Invert 4										
Invert 5										
Invert 6										
Invert 7										
Invert 8										

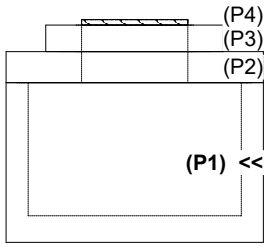

RIGHT-SIDE UP VIEW (int. dimensions)

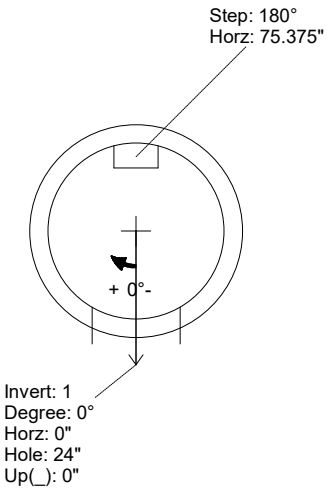

UPSIDE-DOWN VIEW (int. dimenions)

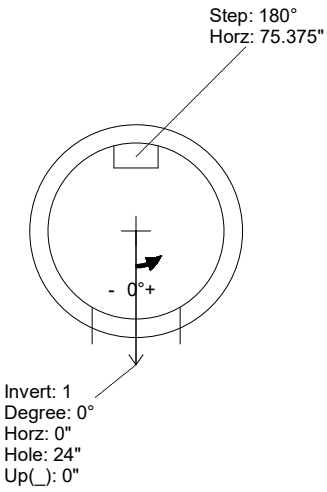

INSIDE WALL DIMENSIONS

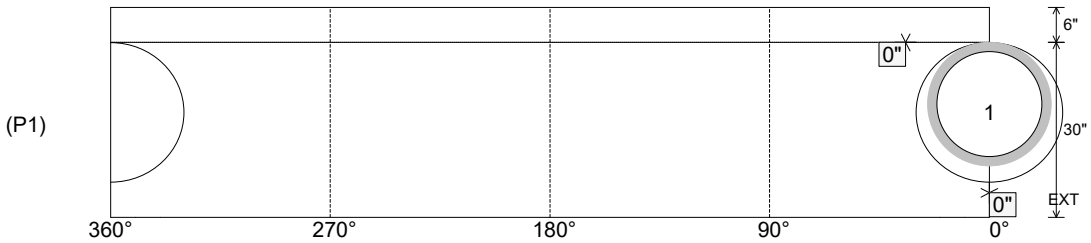

Coating (Int): Coating (Ext):	Seam Up: Flat Seam Dn: n/a	Wall Thickness: 5" Floor Height: 6"	Height (Int): 30" Height (Ext): 36"	Weight (Net): 3229 lb Volume (Net): 0.82cu.yd

Job Name: 26-1051 - HAMPTON 500 Job Location: Hampton Station, TN Contractor: TVA	Plant: 100 6/18/2026 11:09:47 AM	Tech: Jared - F PC: A. Chambers	

Structure ID: 13 (17)

P1 MH048BA30 MH BASE F/n

P4) 24" - CASTING HEIGHT - 1.25"	0 lb
P3) 24" - GRADE RING F/F - 6"	405 lb
P2) 48" - MH FLAT TOP w/ 24" Center Hole F/F - 7"	1700 lb
P1) 48" - MH BASE F/n - 30"	3229 lb
1) CASTING - EJ 6488 O Beehive Grate	250 lb
1) 48" - Conseal CS-102 1.00"	0 lb
2) 24" - Conseal CS-102 1.00"	0 lb
1) Hole - 24	0 lb
2) MH Step ML-10-TDS-NCR - 10"	0 lb
Structure Total:	5584 lb

Structure Notes: .
1. PER ASTM C478 SPECIFICATIONS.
2. CONCRETE = 4,000 PSI AT 28 DAYS.
3. NO INVERT CHANNEL.
4. CASTING BY ICAST (EJ 6488 O BEEHIVE GRATE).

.
REINFORCING PER ASTM A615 (GRADE 60).
- TOP SLAB (As .62) #5 BARS AT 6" C.C.E.W..
- RISER/WALLS (As .12)
- FLOOR (As .31) #5 BARS AT 12" C.C.E.W.

Rim: 506.8' Rim to Invert: 3.6' Slack: 0.55" Sump: 1.6" Step Position: 180°

Position	Elev	Angle	Ext. (cw)	Pipe	Pipe OD	Connector	Hole	Horz Size	Up (_)	Offset
Invert 1	503.2'	0°	0"	18" HDPE	21.2"	Hole 24	24"	25.133"	0"	0"
Invert 2										
Invert 3										
Invert 4										
Invert 5										
Invert 6										
Invert 7										
Invert 8										

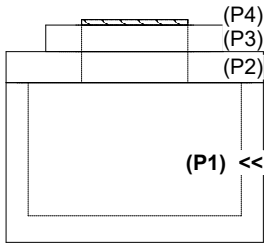

RIGHT-SIDE UP VIEW (int. dimensions)

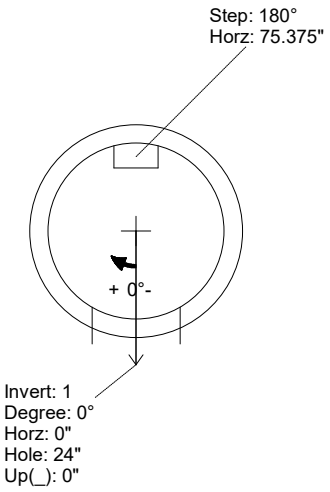

UPSIDE-DOWN VIEW (int. dimenions)

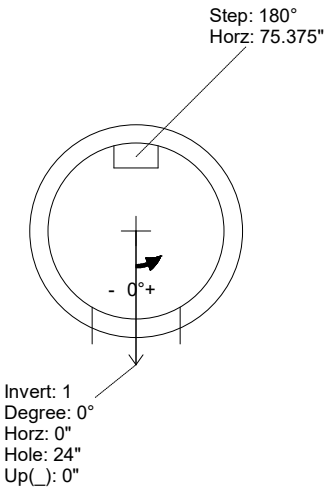

INSIDE WALL DIMENSIONS

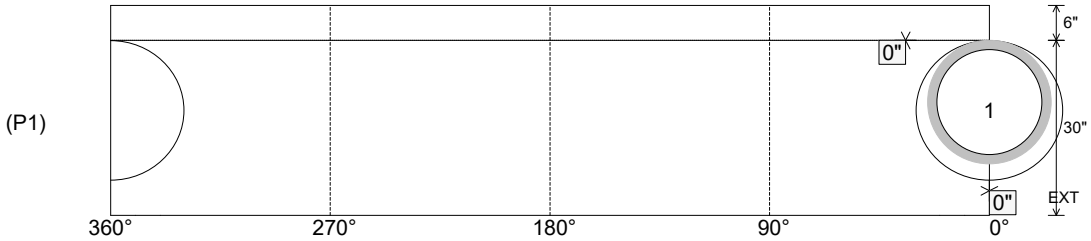

Coating (Int): Coating (Ext):	Seam Up: Flat Seam Dn: n/a	Wall Thickness: 5" Floor Height: 6"	Height (Int): 30" Height (Ext): 36"	Weight (Net): 3229 lb Volume (Net): 0.82cu.yd

Job Name: 26-1899 - Gateway 65 Industrial Road Job Location: Franklin, KY Contractor: RD Sitework LLC	Plant: 100 6/4/2026 4:34:06 PM	Tech: Jared - F PC: E. Bardley	

Structure ID: 23 ST-CI

P1 MH048BA42 MH BASE T/n

P3) 24" x 36" - CASTING HEIGHT - 6"	0 lb
P2) 48" - MH FLAT TOP w/24"x36" Hole F/G - 12"	1300 lb
P1) 48" - MH BASE T/n - 42"	4100 lb
1) CASTING - HOE 525 SET FLAT GRATE (F/G/H)	442 lb
1) 48" - Conseal CS-102 1.00"	0 lb
1) 24" x 36" - Conseal CS-102 1.00"	0 lb
1) Hole - 22	0 lb
Structure Total:	5842 lb

Structure Notes: .
1. PER ASTM C478 SPECIFICATIONS.
2. CONCRETE = 4,000 PSI AT 28 DAYS.
3. NO STEPS AND NO INVERT CHANNEL.
4. CASTING BY ICAST (HOE 525 SET FLAT GRATE (F/G/H)).
5. CITY OF BGKY-CBI TYPE F.
.
REINFORCING PER ASTM A615 (GRADE 60).
- TOP SLAB (As .62) #5 BARS AT 6" C.C.E.W..
- RISER/WALLS (As .12)
- FLOOR (As .31) #5 BARS AT 12" C.C.E.W.

Rim: 686.05' Rim to Invert: 5' Slack: 0" Sump: 0" Step Position:

Position	Elev	Angle	Ext. (cw)	Pipe	Pipe OD	Connector	Hole	Horz Size	Up (_)	Offset
Invert 1	681.05'	0°	0"	15" RCP B WALL	19.5"	Hole 22	22"	22.854"	-2.25"	0"
Invert 2										
Invert 3										
Invert 4										
Invert 5										
Invert 6										
Invert 7										
Invert 8										

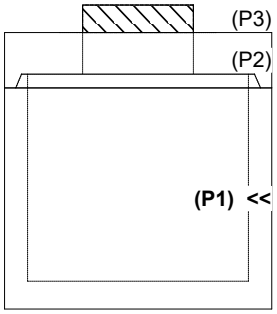

RIGHT-SIDE UP VIEW (int. dimensions)

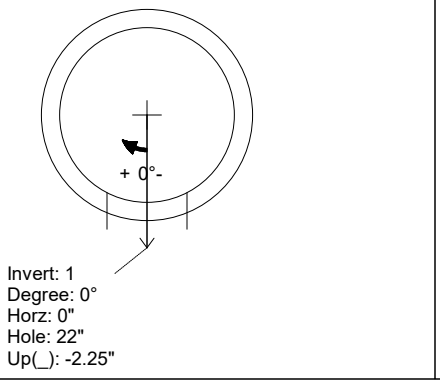

UPSIDE-DOWN VIEW (int. dimenions)

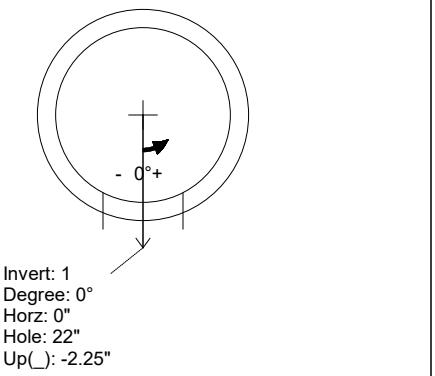

INSIDE WALL DIMENSIONS

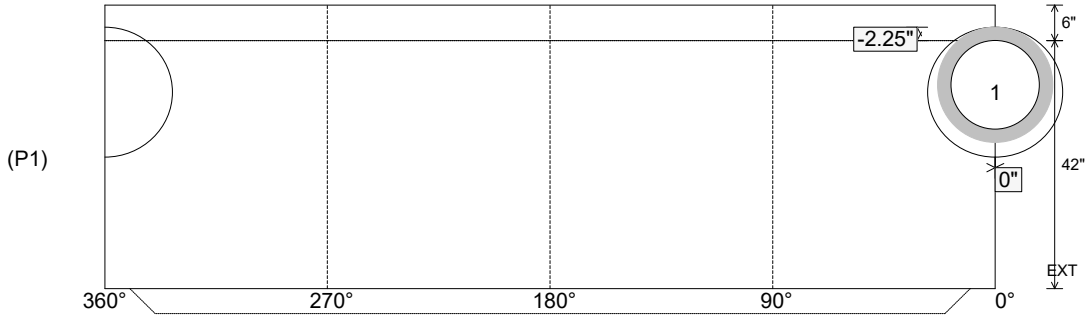

Coating (Int): Coating (Ext):	Seam Up: Tongue Seam Dn: n/a	Wall Thickness: 5" Floor Height: 6"	Height (Int): 42" Height (Ext): 48"	Weight (Net): 4100 lb Volume (Net): 1.05cu.yd

Job Name: 26-1899 - Gateway 65 Industrial Road Job Location: Franklin, KY Contractor: RD Sitework LLC	Plant: 100 6/4/2026 4:34:05 PM	Tech: Jared - F PC: E. Bardley	

Structure ID: 22 ST-CI

P1 MH048BAVF **MH BASE Custom Ht T/n**

P3) 24" x 36" - CASTING HEIGHT - 6"	0 lb
P2) 48" - MH FLAT TOP w/24"x36" Hole F/G - 12"	1300 lb
P1) 48" - MH BASE Custom Ht T/n - 45"	4145 lb
1) CASTING - HOE 525 SET FLAT GRATE (F/G/H)	442 lb
1) 48" - Conseal CS-102 1.00"	0 lb
1) 24" x 36" - Conseal CS-102 1.00"	0 lb
2) Hole - 22	0 lb
Structure Total:	5887 lb

Structure Notes: .
1. PER ASTM C478 SPECIFICATIONS.
2. CONCRETE = 4,000 PSI AT 28 DAYS.
3. NO STEPS AND NO INVERT CHANNEL.
4. CASTING BY ICAST (HOE 525 SET FLAT GRATE (F/G/H)).
5. CITY OF BGKY-CBI TYPE F.

.
REINFORCING PER ASTM A615 (GRADE 60).
- TOP SLAB (As .62) #5 BARS AT 6" C.C.E.W..
- RISER/WALLS (As .12)
- FLOOR (As .31) #5 BARS AT 12" C.C.E.W.

Rim: 685.88' Rim to Invert: 5.29' Slack: 0.48" Sump: 0" Step Position:

Position	Elev	Angle	Ext. (cw)	Pipe	Pipe OD	Connector	Hole	Horz Size	Up (_)	Offset
Invert 1	680.59'	0°	0"	15" RCP B WALL	19.5"	Hole 22	22"	22.854"	-2.25"	0"
Invert 2	680.59'	270°	136.625"	15" RCP B WALL	19.5"	Hole 22	22"	22.854"	-2.25"	0"
Invert 3										
Invert 4										
Invert 5										
Invert 6										
Invert 7										
Invert 8										

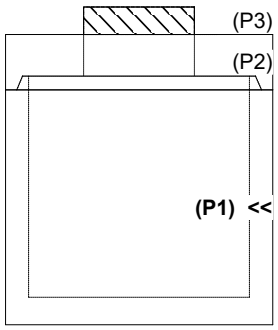

RIGHT-SIDE UP VIEW (int. dimensions)

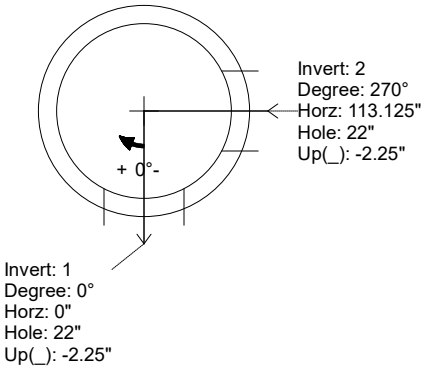

UPSIDE-DOWN VIEW (int. dimenions)

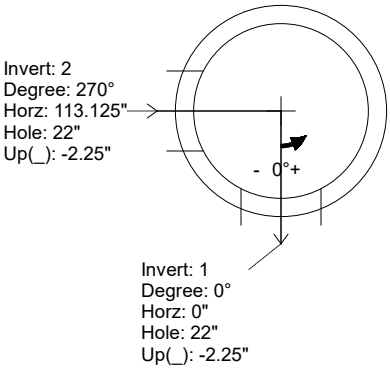

INSIDE WALL DIMENSIONS

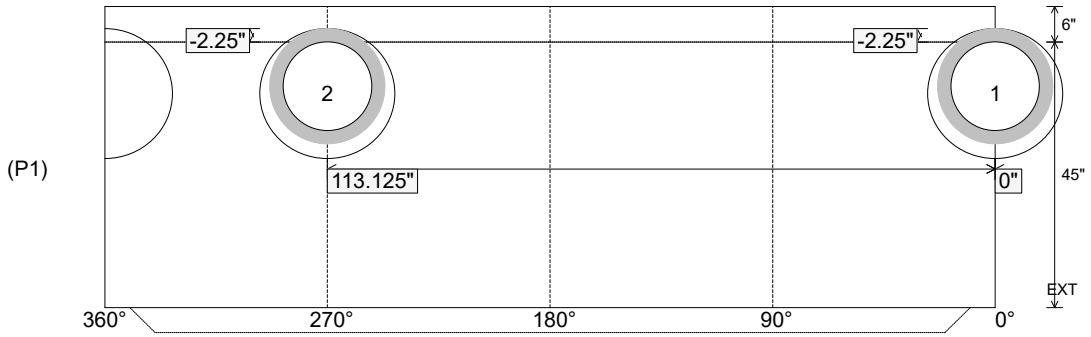

Coating (Int): Coating (Ext):	Seam Up: Tongue Seam Dn: n/a	Wall Thickness: 5" Floor Height: 6"	Height (Int): 45" Height (Ext): 51"	Weight (Net): 4145 lb Volume (Net): 1.06cu.yd

Job Name: 26-1899 - Gateway 65 Industrial Road Job Location: Franklin, KY Contractor: RD Sitework LLC	Plant: 100 6/4/2026 4:34:05 PM	Tech: Jared - F PC: E. Bardley	

Structure ID: 21 ST-CI

P1 MH048BA42 MH BASE T/n

P3) 24" x 36" - CASTING HEIGHT - 6"	0 lb
P2) 48" - MH FLAT TOP w/24"x36" Hole F/G - 12"	1300 lb
P1) 48" - MH BASE T/n - 42"	3935 lb
1) CASTING - HOE 525 SET FLAT GRATE (F/G/H)	442 lb
1) 48" - Conseal CS-102 1.00"	0 lb
1) 24" x 36" - Conseal CS-102 1.00"	0 lb
2) Hole - 22	0 lb
Structure Total:	5677 lb

Structure Notes: .
1. PER ASTM C478 SPECIFICATIONS.
2. CONCRETE = 4,000 PSI AT 28 DAYS.
3. NO STEPS AND NO INVERT CHANNEL.
4. CASTING BY ICAST (HOE 525 SET FLAT GRATE (F/G/H)).
5. CITY OF BGKY-CBI TYPE F.

.
REINFORCING PER ASTM A615 (GRADE 60).
- TOP SLAB (As .62) #5 BARS AT 6" C.C.E.W..
- RISER/WALLS (As .12)
- FLOOR (As .31) #5 BARS AT 12" C.C.E.W.

Rim: 681' Rim to Invert: 5' Slack: 0" Sump: 0" Step Position:

Position	Elev	Angle	Ext. (cw)	Pipe	Pipe OD	Connector	Hole	Horz Size	Up (_)	Offset
Invert 1	676'	0°	0"	15" RCP B WALL	19.5"	Hole 22	22"	22.854"	-2.25"	0"
Invert 2	676'	180°	91.125"	15" RCP B WALL	19.5"	Hole 22	22"	22.854"	-2.25"	0"
Invert 3										
Invert 4										
Invert 5										
Invert 6										
Invert 7										
Invert 8										

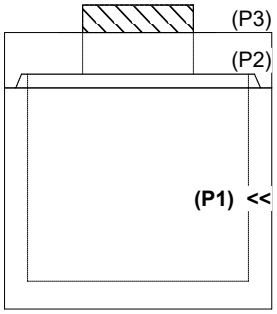

RIGHT-SIDE UP VIEW (int. dimensions)

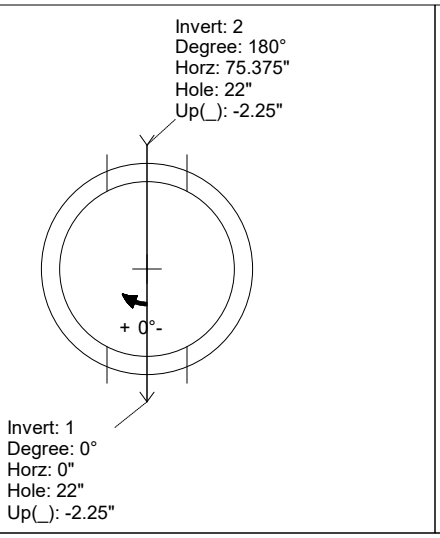

UPSIDE-DOWN VIEW (int. dimenions)

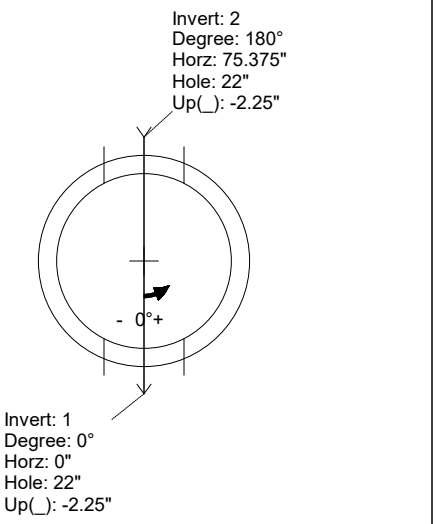

INSIDE WALL DIMENSIONS

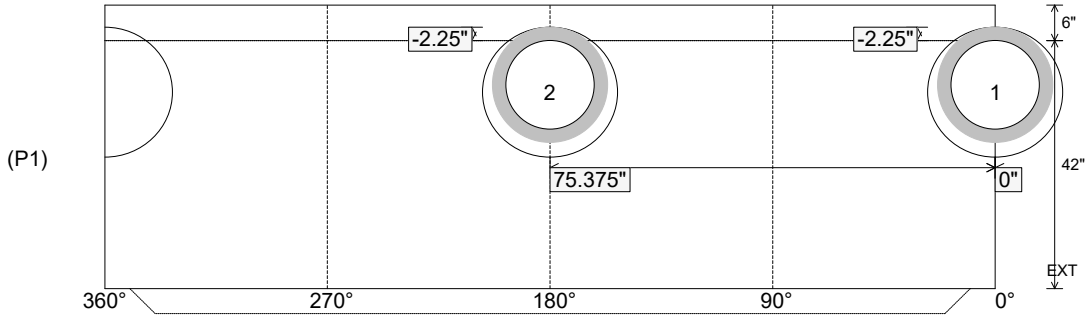

Coating (Int): Coating (Ext):	Seam Up: Tongue Seam Dn: n/a	Wall Thickness: 5" Floor Height: 6"	Height (Int): 42" Height (Ext): 48"	Weight (Net): 3935 lb Volume (Net): 1cu.yd

Job Name: 25-1401 Irwin Landing Ph. 1 Job Location: Murfreesboro, TN Contractor: Bear Construction LLC	Plant: Beaver Dam 6/9/2026 10:40:15 AM	Tech: S. Felletter PC: Erica Bradley	

Structure ID: R2

P2 MH060LD08-28SQ **MH FLAT TOP w/28"x28" Hole F/F**

P3) 28" x 28" - CASTING HEIGHT - 5"	0 lb
P2) 60" - MH FLAT TOP w/28"x28" Hole F/F - 8"	2217 lb
P1) 60" - MH BASE F/n - 72"	9218 lb
1) 60" - STORM INVERT CHANNEL - 1/4 HEIGHT	1700 lb
1) CASTING - JBS 3104-V SINGLE SET	250 lb
1) 60" - Conseal CS-102 1.00"	0 lb
1) 28" x 28" - Conseal CS-102 1.00"	0 lb
1) Hole - 34	0 lb
2) Hole - 26	0 lb
6) MH Step ML-10-TDS-NCR - 10"	0 lb
Structure Total:	13385 lb

Structure Notes: .
1. PER ASTM C478 SPECIFICATIONS.
2. CONCRETE = 4,000 PSI AT 28 DAYS.
3. CASTING BY ICAST (JBS-3104 SINGLE SET).
.
REINFORCING PER ASTM A615 (GRADE 60).
- TOP SLAB (As .62) #5 BARS AT 6" C.C.E.W..
- RISER/WALLS (As .18)
- FLOOR (As .37) #5 BARS AT 10" C.C.E.W.

NOTES:
1. MANUFACTURED TO ASTM C-478 (LATEST REVISION).
2. CONCRETE: 4,000 PSI AT 28 DAYS.
3. REINFORCING: #5 BAR @ 6" C.C. E.W. (GRADE 60).

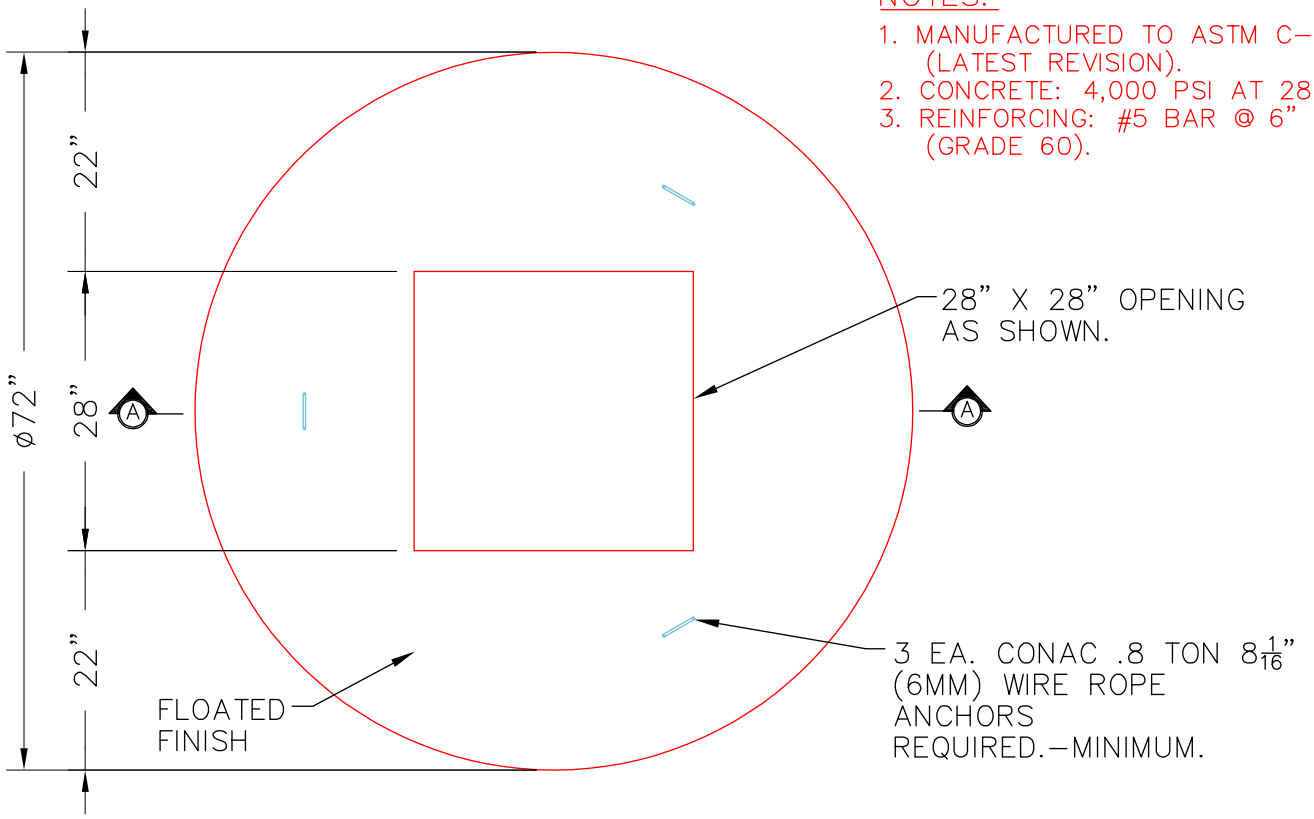

PLAN VIEW

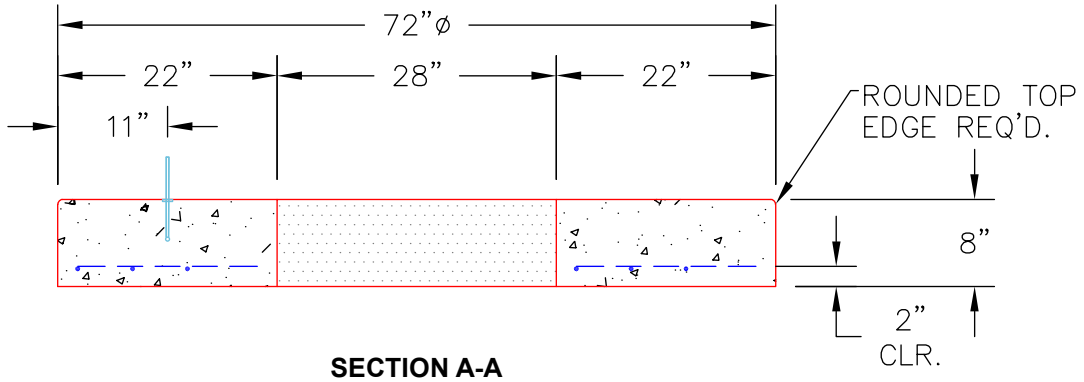

SECTION A-A

Coating (Int): Coating (Ext):	Seam Up: Flat Seam Dn: Flat	Wall Thickness: 6"	Height (Ext): 8"	Weight (Net): 2217 lb Volume (Net): 0.57cu.yd

Job Name: 25-3062 Portland Bypass Job Location: Portland, TN Contractor: Scotty's Contracting & Stone, LLC	Plant: Beaver Dam 6/1/2026 8:24:11 AM	Tech: J. Coppage PC: C. Goff	

Structure ID: CB-6

P2 MH060LD10SP **MH FLAT TOP - TDOT NO 12 (28"x34" Hole)**

P3) 28" x 34" - CASTING HEIGHT - 7"	0 lb
P2) 60" - MH FLAT TOP - TDOT NO 12 (28"x34" Hole) - 10"	3417 lb
P1) 60" - MH BASE Custom Ht - 65"	8492 lb
1) CASTING - JBS-3123 MODIFIED SET	250 lb
1) 60" - Conseal CS-102 1.00"	0 lb
1) 28" x 34" - Conseal CS-102 1.00"	0 lb
2) Hole - 39	0 lb
1) Hole - 6	0 lb

Structure Total:	12159 lb

Structure Notes:
1. PER TDOT D-CB-12RB / ASTM C478 SPEC'S.
2. CONCRETE = 4,000 PSI AT 28 DAYS.
3. NO INVERT CHANNEL.
4. JBS 3123 MOD SINGLE SET BY ICAST
5. REINFORCING PER ASTM A615 (GRADE 60).

** PER TDOT STD DRAWING D-CB-12RB **
- TOP SLAB - DBL MAT #5 BARS.
- RISER (As .18)
- FLOOR (As .62) #5 BARS AT 6" C.C.E.W.

NOTES:
1. MANUFACTURED TO ASTM C-478 (LATEST REVISION).
2. CONCRETE: 4,000 PSI AT 28 DAYS.
3. REINFORCING: PER TDOT DRAWING D-CB-12RA OR D-RL-1 FOR WWM OPTION.

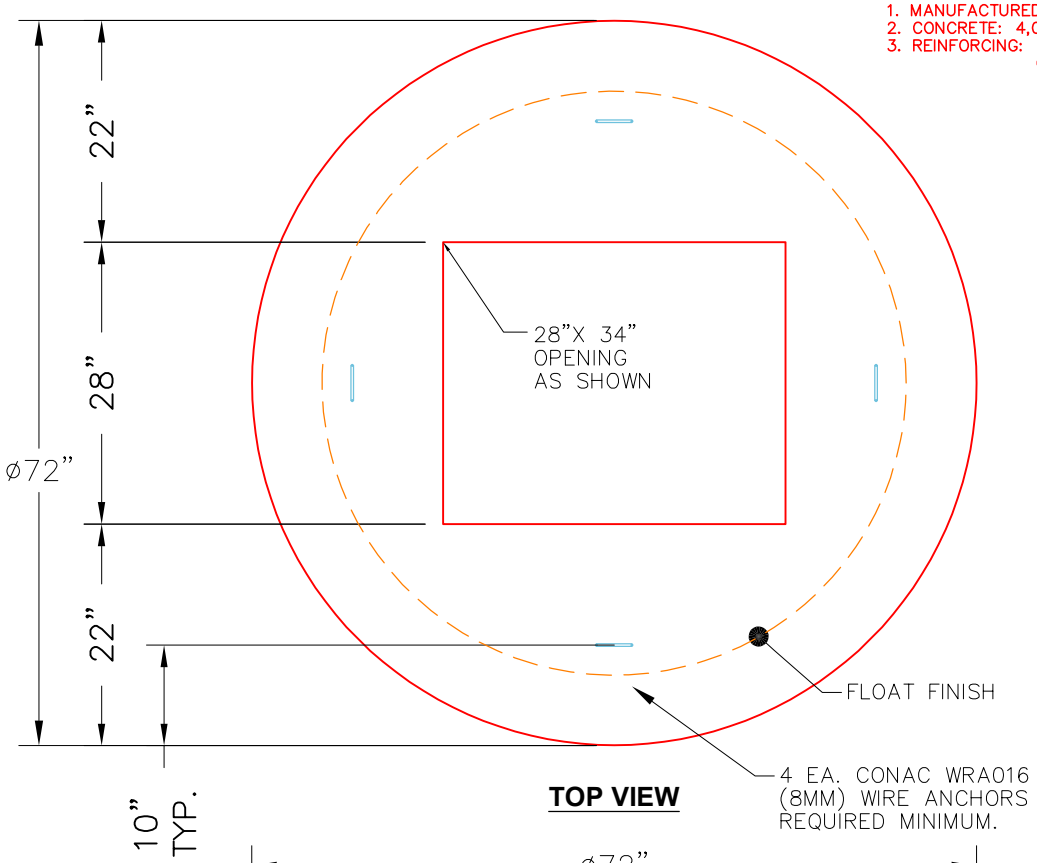

TOP VIEW

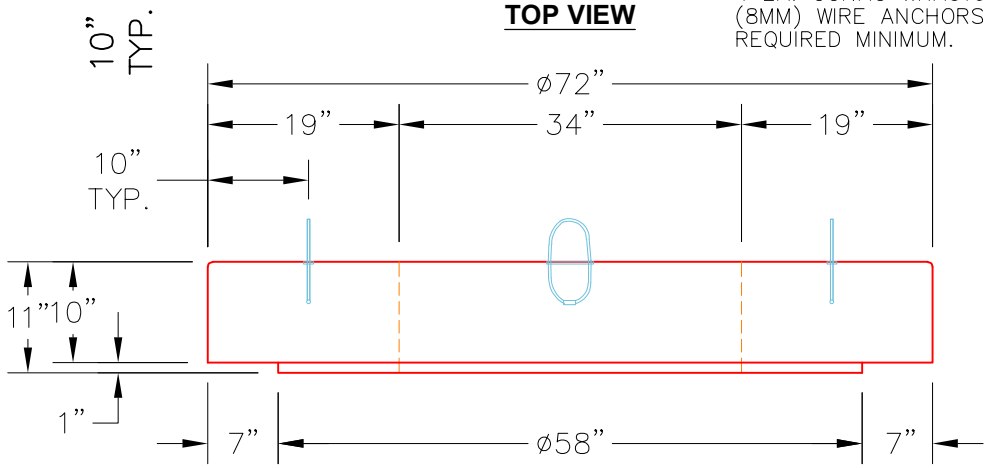

FRONT VIEW

Coating (Int): Coating (Ext):	Seam Up: Flat Seam Dn: Flat	Wall Thickness: 6"	Height (Ext): 10"	Weight (Net): 3417 lb Volume (Net): 0.87cu.yd

Job Name: 25-3062 Portland Bypass Job Location: Portland, TN Contractor: Scotty's Contracting & Stone, LLC	Plant: Beaver Dam 6/1/2026 8:22:40 AM	Tech: J. Coppage PC: C. Goff	

Structure ID: CB-5

P1 MH060BA60 MH BASE

P4) 28" x 34" - CASTING HEIGHT - 7"	0 lb
P3) 60" - MH FLAT TOP - TDOT NO 12 (28"x34" Hole) - 10"	3417 lb
P2) 60" - MH RISER SPECIAL/CUST. HT - 44"	4579 lb
P1) 60" - MH BASE - 60"	7136 lb
1) CASTING - JBS-3123 MODIFIED SET	250 lb
2) 60" - Conseal CS-102 1.00"	0 lb
1) 28" x 34" - Conseal CS-102 1.00"	0 lb
2) Hole - 46	0 lb
1) Hole - 6	0 lb
Structure Total:	15382 lb

Structure Notes:
1. PER TDOT D-CB-12RB / ASTM C478 SPEC'S.
2. CONCRETE = 4,000 PSI AT 28 DAYS.
3. JBS 3123 MOD SINGLE SET BY ICAST
4. REINFORCING PER ASTM A615 (GRADE 60).
** PER TDOT STD DRAWING D-CB-12RB **
- TOP SLAB - DBL MAT #5 BARS.
- RISER (As .18)
- FLOOR (As .62) #5 BARS AT 6" C.C.E.W.

Rim: 792.82' Rim to Invert: 9.83' Slack: 0.96" Sump: 4" Step Position:

Position	Elev	Angle	Ext. (cw)	Pipe	Pipe OD	Connector	Hole	Horz Size	Up (_)	Offset
Invert 1	782.99'	0°	0"	36" RCP B WALL	44"	Hole 46	46"	52.418"	0"	0"
Invert 2	782.99'	180°	113.097"	36" RCP B WALL	44"	Hole 46	46"	52.418"	0"	0"
Invert 3										
Invert 4										
Invert 5										
Invert 6										
Invert 7										
Invert 8										

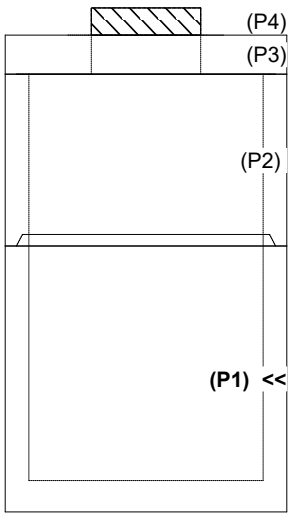

RIGHT-SIDE UP VIEW (int. dimensions)

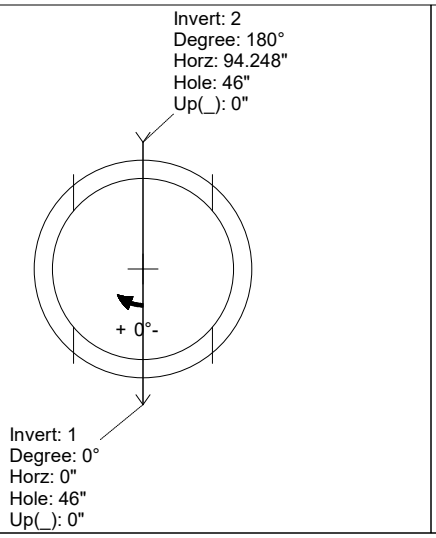

UPSIDE-DOWN VIEW (int. dimenions)

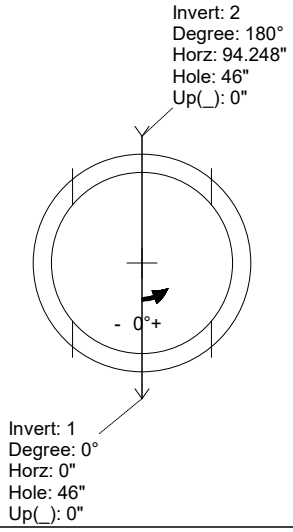

INSIDE WALL DIMENSIONS

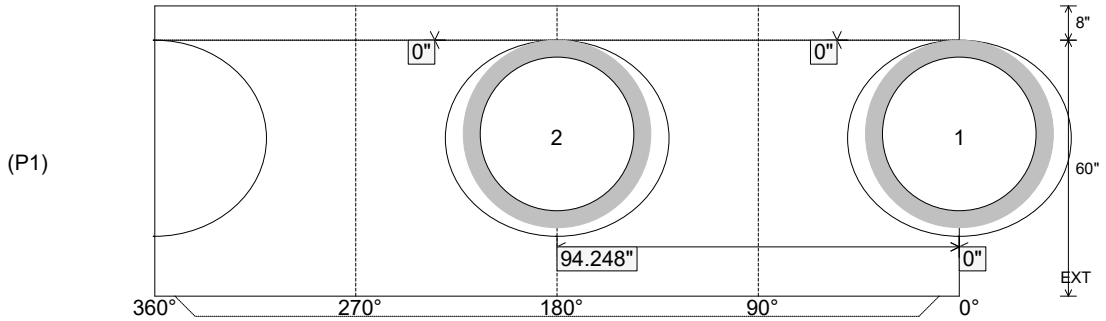

Coating (Int): Coating (Ext):	Seam Up: Tongue Seam Dn: n/a	Wall Thickness: 6" Floor Height: 8"	Height (Int): 60" Height (Ext): 68"	Weight (Net): 7136 lb Volume (Net): 1.82cu.yd

Job Name: 25-3062 Portland Bypass Job Location: Portland, TN Contractor: Scotty's Contracting & Stone, LLC	Plant: Beaver Dam 6/1/2026 8:24:49 AM	Tech: J. Coppage PC: C. Goff	

Structure ID: CB-5

P2 MH060RSVFS MH RISER SPECIAL/CUST. HT

P4) 28" x 34" - CASTING HEIGHT - 7"	0 lb
P3) 60" - MH FLAT TOP - TDOT NO 12 (28"x34" Hole) - 10"	3417 lb
P2) 60" - MH RISER SPECIAL/CUST. HT - 44"	4579 lb
P1) 60" - MH BASE - 60"	7136 lb
1) CASTING - JBS-3123 MODIFIED SET	250 lb
2) 60" - Conseal CS-102 1.00"	0 lb
1) 28" x 34" - Conseal CS-102 1.00"	0 lb
2) Hole - 46	0 lb
1) Hole - 6	0 lb
Structure Total:	15382 lb

Structure Notes:
1. PER TDOT D-CB-12RB / ASTM C478 SPEC'S.
2. CONCRETE = 4,000 PSI AT 28 DAYS.
3. JBS 3123 MOD SINGLE SET BY ICAST
4. REINFORCING PER ASTM A615 (GRADE 60).
** PER TDOT STD DRAWING D-CB-12RB **
- TOP SLAB - DBL MAT #5 BARS.
- RISER (As .18)
- FLOOR (As .62) #5 BARS AT 6" C.C.E.W.

Rim: 792.82' Rim to Invert: 9.83' Slack: 0.96" Sump: 4" Step Position:

Position	Elev	Angle	Ext. (cw)	Pipe	Pipe OD	Connector	Hole	Horz Size	Up (_)	Offset
Invert 1										
Invert 2										
Invert 3	789.82'	180°	113.097"	4" HDPE (perf pipe)	4.8"	Hole 6	6"	6.01"	20.81"	0"
Invert 4										
Invert 5										
Invert 6										
Invert 7										
Invert 8										

RIGHT-SIDE UP VIEW (int. dimensions)

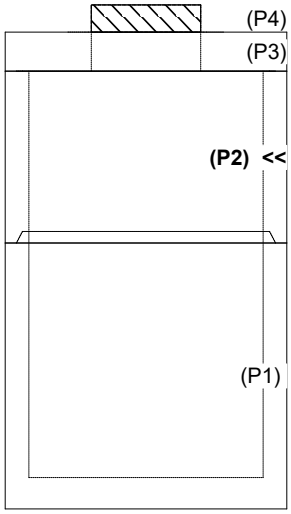

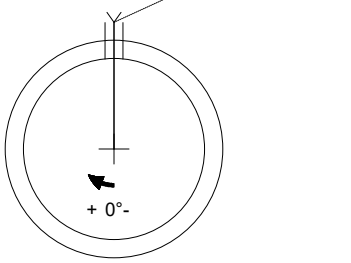

INSIDE WALL DIMENSIONS

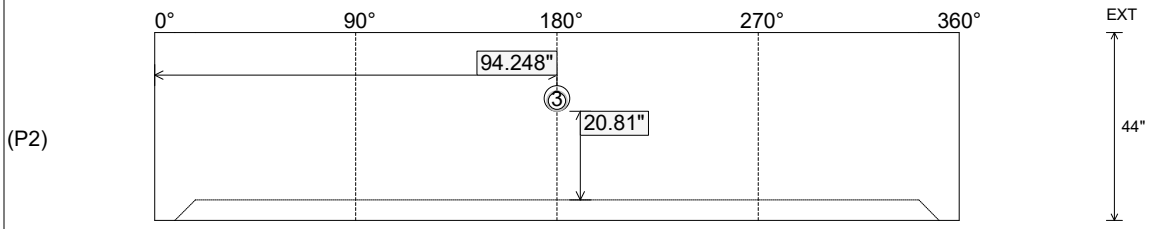

Coating (Int): Coating (Ext):	Seam Up: Flat Seam Dn: Groove	Wall Thickness: 6" Floor Height: 0"	Height (Int): 44" Height (Ext): 44"	Weight (Net): 4579 lb Volume (Net): 1.17cu.yd

Job Name: 26-1051 - HAMPTON 500 Job Location: Hampton Station, TN Contractor: TVA	Plant: 100 6/18/2026 11:09:43 AM	Tech: Jared - F PC: A. Chambers	

Structure ID: 5 (9)

P1 MH060BAVF **MH BASE Custom Ht T/n**

P4) 24" - CASTING HEIGHT - 1.25"	0 lb
P3) 24" - GRADE RING F/F - 6"	405 lb
P2) 60" - MH FLAT TOP w/24" Ctr. Hole F/G - 13"	2674 lb
P1) 60" - MH BASE Custom Ht T/n - 63"	7627 lb
1) CASTING - EJ 6488 O Beehive Grate	250 lb
1) 60" - Conseal CS-102 1.00"	0 lb
2) 24" - Conseal CS-102 1.00"	0 lb
2) Hole - 44	0 lb
5) MH Step ML-10-TDS-NCR - 10"	0 lb
Structure Total:	10956 lb

Structure Notes: .
1. PER ASTM C478 SPECIFICATIONS.
2. CONCRETE = 4,000 PSI AT 28 DAYS.
3. NO INVERT CHANNEL.
4. CASTING BY ICAST (EJ 6488 O BEEHIVE GRATE).

.
REINFORCING PER ASTM A615 (GRADE 60).
- TOP SLAB (As .62) #5 BARS AT 6" C.C.E.W..
- RISER/WALLS (As .18)
- FLOOR (As .37) #5 BARS AT 10" C.C.E.W.

Rim: 506.8' Rim to Invert: 6.7' Slack: 0" Sump: 2.85" Step Position: 90°

Position	Elev	Angle	Ext. (cw)	Pipe	Pipe OD	Connector	Hole	Horz Size	Up (_)	Offset
Invert 1	500.1'	0°	0"	36" HDPE	41.7"	Hole 44	44"	49.393"	0"	0"
Invert 2	500.1'	180°	113.125"	36" HDPE	41.7"	Hole 44	44"	49.393"	0"	0"
Invert 3										
Invert 4										
Invert 5										
Invert 6										
Invert 7										
Invert 8										

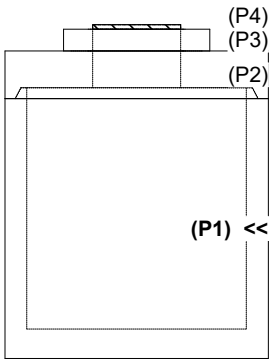

RIGHT-SIDE UP VIEW (int. dimensions)

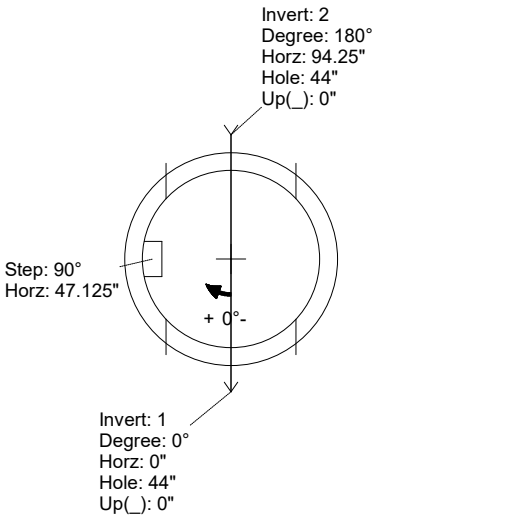

UPSIDE-DOWN VIEW (int. dimenions)

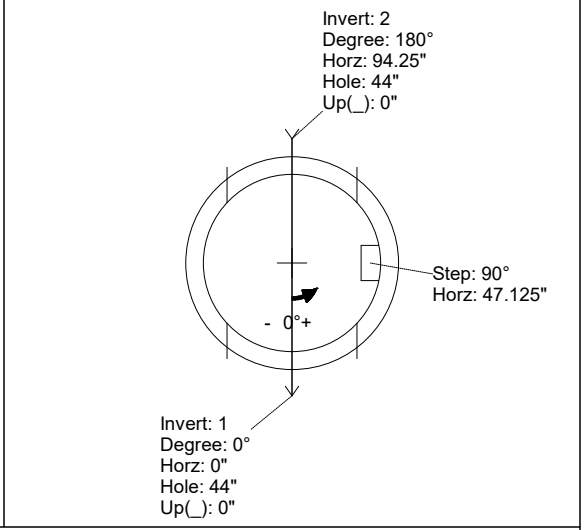

INSIDE WALL DIMENSIONS

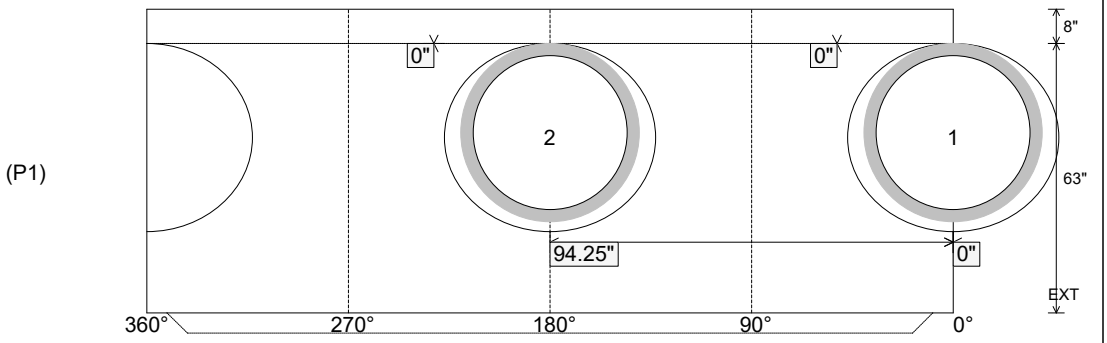

Coating (Int): Coating (Ext):	Seam Up: Tongue Seam Dn: n/a	Wall Thickness: 6" Floor Height: 8"	Height (Int): 63" Height (Ext): 71"	Weight (Net): 7627 lb Volume (Net): 1.95cu.yd

Job Name: 26-2744 904618 Jeffersonville HS Job Location: Jeffersonville, IN Contractor: Contech Engineering Solutions	Plant: 6/24/2026 2:29:51 PM	Tech: S. Felletter PC: C. Goff	

Structure ID: 10-CS-6

P1 MH072BA24 MH BASE T/n

P5) 30" - CASTING HEIGHT - 4"	0 lb
P4) 72" - MH FLAT TOP SPEC. (30" ECC HOLE) F/G - 15"	4661 lb
P3) 72" - MH RISER T/G - 12"	1749 lb
P2) 72" - MH RISER T/G - 84"	11003 lb
P1) 72" - MH BASE T/n - 24"	7398 lb
1) ASSEMBLY REQUIRED	0 lb
1) CVSTENCILING	0 lb
3) 72" - Conseal CS-102 1.00"	0 lb
2) Hole - 36	0 lb
Structure Total:	24811 lb

Structure Notes: .
4" CASTING BY OTHERS
.
LIFTING ANCHORS TO BE INSTALLED ON THE OUTSIDE OF THE STRUCTURE
.
ICAST TO INSTALL THE INTERNALS
.
CONTECH'S LOGO AS WELL AS THE INLET AND OUTLET MUST BE STENCILED ONTO THE STRUCTURE

Rim: 483' Rim to Invert: 6.14' Slack: 4.796" Sump: 70.116" Step Position: 90°

Position	Elev	Angle	Ext. (cw)	Pipe	Pipe OD	Connector	Hole	Horz Size	Up (_)	Offset
Invert 1										
Invert 2										
Invert 3										
Invert 4										
Invert 5										
Invert 6										
Invert 7										
Invert 8										

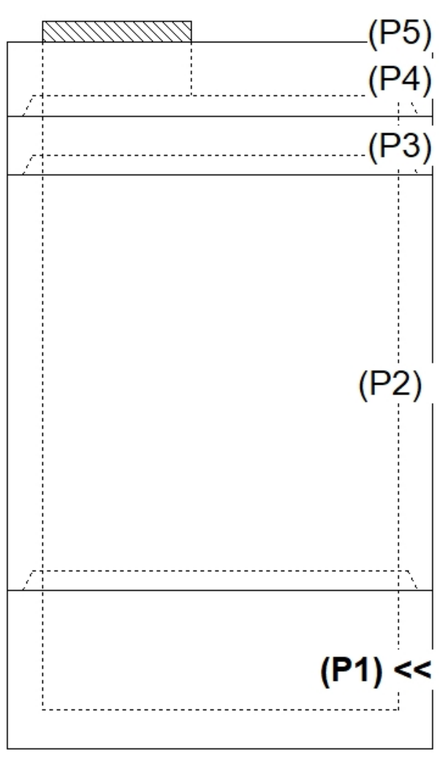

RIGHT-SIDE UP VIEW (int. dimensions)

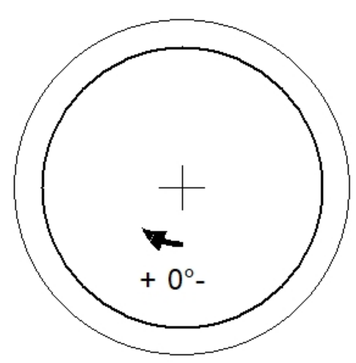

UPSIDE-DOWN VIEW (int. dimenions)

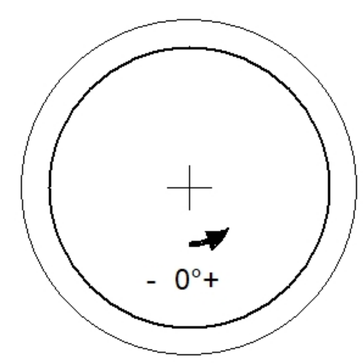

INSIDE WALL DIMENSIONS

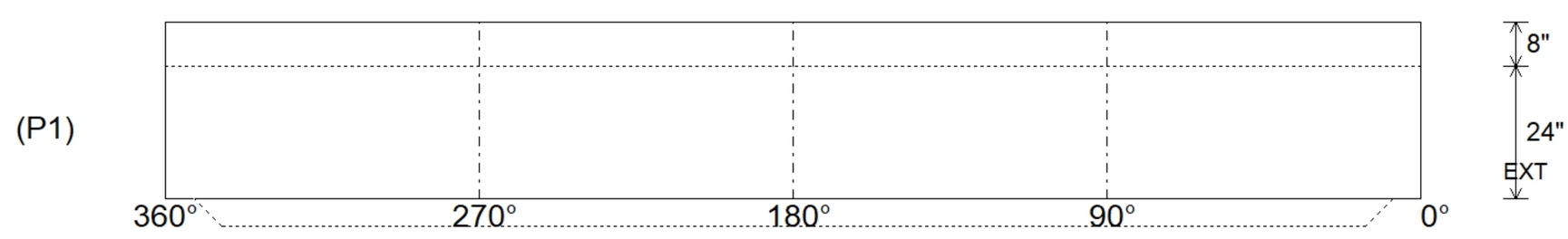

Coating (Int): Coating (Ext):	Seam Up: Tongue Seam Dn: n/a	Wall Thickness: 7" Floor Height: 8"	Height (Int): 24" Height (Ext): 32"	Weight (Net): 7398 lb Volume (Net): 1.89cu.yd

Job Name: 25-3062 Portland Bypass Job Location: Portland, TN Contractor: Scotty's Contracting & Stone, LLC	Plant: Beaver Dam 6/1/2026 8:22:49 AM	Tech: J. Coppage PC: C. Goff	

Structure ID: CB-15

P1 MH072BAVF **MH BASE Custom Ht**

P3) 28" x 34" - CASTING HEIGHT - 7"	0 lb
P2) 72" - MH FLAT TOP - TDOT NO 12 (28"x34" Hole) - 10"	4406 lb
P1) 72" - MH BASE Custom Ht - 75"	12276 lb
1) CASTING - JBS-3123 MODIFIED SET	250 lb
1) 72" - Conseal CS-102 1.00"	0 lb
1) 28" x 34" - Conseal CS-102 1.00"	0 lb
2) Hole - 58 x 42	0 lb
1) Hole - 6	0 lb

Structure Total:	16932 lb

Structure Notes:
1. PER TDOT D-CB-12RB / ASTM C478 SPEC'S.
2. CONCRETE = 4,000 PSI AT 28 DAYS.
3. JBS 3123 MOD SINGLE SET BY ICAST
4. REINFORCING PER ASTM A615 (GRADE 60).

** PER TDOT STD DRAWING D-CB-12RB **
- TOP SLAB - DBL MAT #5 BARS.
- RISER (As .18)
- FLOOR (As .62) #5 BARS AT 6" C.C.E.W.

Rim: 812.48' Rim to Invert: 7.31' Slack: 0.22" Sump: 4.5" Step Position:

Position	Elev	Angle	Ext. (cw)	Pipe	Pipe OD	Connector	Hole	Horz Size	Up (_)	Offset
Invert 1	805.17'	0°	0"	45" x 29" ELL RCP	54" x 38"	Hole 58 x 42	58" x 42"	67.436"	0"	0"
Invert 2	805.17'	180°	135.088"	45" x 29" ELL RCP	54" x 38"	Hole 58 x 42	58" x 42"	67.436"	0"	0"
Invert 3	809.48'	90°	67.544"	4" HDPE (perf pipe)	4.8"	Hole 6	6"	6.007"	55.82"	0"
Invert 4										
Invert 5										
Invert 6										
Invert 7										
Invert 8										

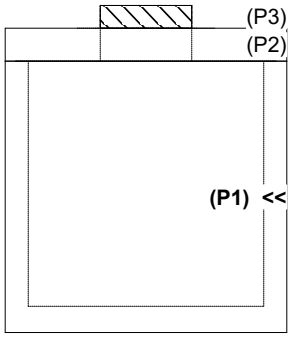

RIGHT-SIDE UP VIEW (int. dimensions)

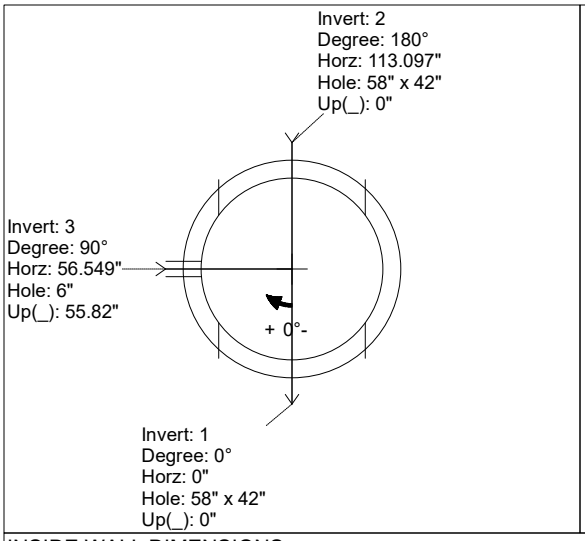

UPSIDE-DOWN VIEW (int. dimenions)

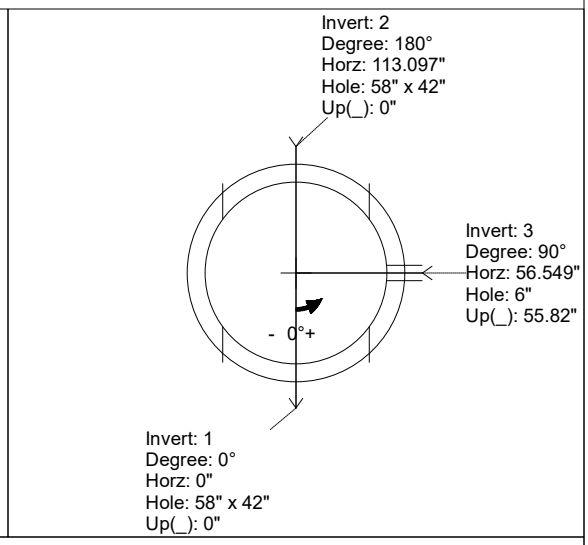

INSIDE WALL DIMENSIONS

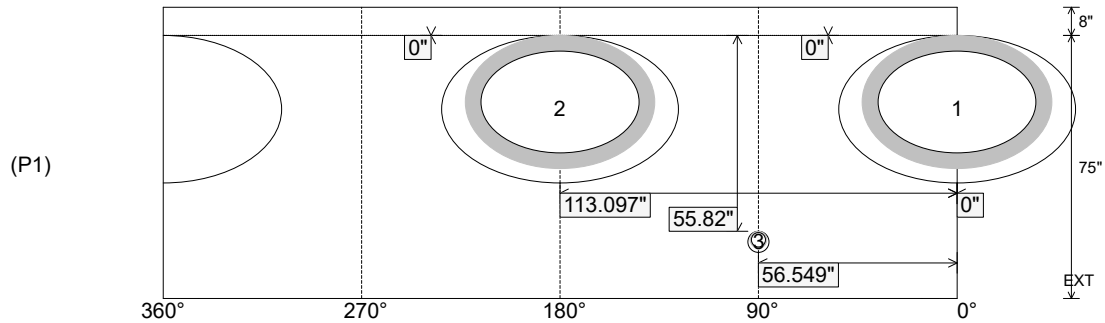

Coating (Int): Coating (Ext):	Seam Up: Flat Seam Dn: n/a	Wall Thickness: 7" Floor Height: 8"	Height (Int): 75" Height (Ext): 83"	Weight (Net): 12276 lb Volume (Net): 3.14cu.yd

Job Name: 25-3062 Portland Bypass Job Location: Portland, TN Contractor: Scotty's Contracting & Stone, LLC	Plant: Beaver Dam 6/1/2026 8:24:13 AM	Tech: J. Coppage PC: C. Goff	

Structure ID: CB-15

P2 MH072LD10SP **MH FLAT TOP - TDOT NO 12 (28"x34" Hole)**

P3) 28" x 34" - CASTING HEIGHT - 7"	0 lb
P2) 72" - MH FLAT TOP - TDOT NO 12 (28"x34" Hole) - 10"	4406 lb
P1) 72" - MH BASE Custom Ht - 75"	12276 lb
1) CASTING - JBS-3123 MODIFIED SET	250 lb
1) 72" - Conseal CS-102 1.00"	0 lb
1) 28" x 34" - Conseal CS-102 1.00"	0 lb
2) Hole - 58 x 42	0 lb
1) Hole - 6	0 lb

Structure Total:	16932 lb

Structure Notes:
1. PER TDOT D-CB-12RB / ASTM C478 SPEC'S.
2. CONCRETE = 4,000 PSI AT 28 DAYS.
3. JBS 3123 MOD SINGLE SET BY ICAST
4. REINFORCING PER ASTM A615 (GRADE 60).

** PER TDOT STD DRAWING D-CB-12RB **
- TOP SLAB - DBL MAT #5 BARS.
- RISER (As .18)
- FLOOR (As .62) #5 BARS AT 6" C.C.E.W.

NOTES:
1. MANUFACTURED TO ASTM C-478 (LATEST REVISION).
2. CONCRETE: 4,000 PSI AT 28 DAYS.
3. REINFORCING: PER TDOT DRAWING D-CB-12RA OR D-RL-1 FOR WWM OPTION.

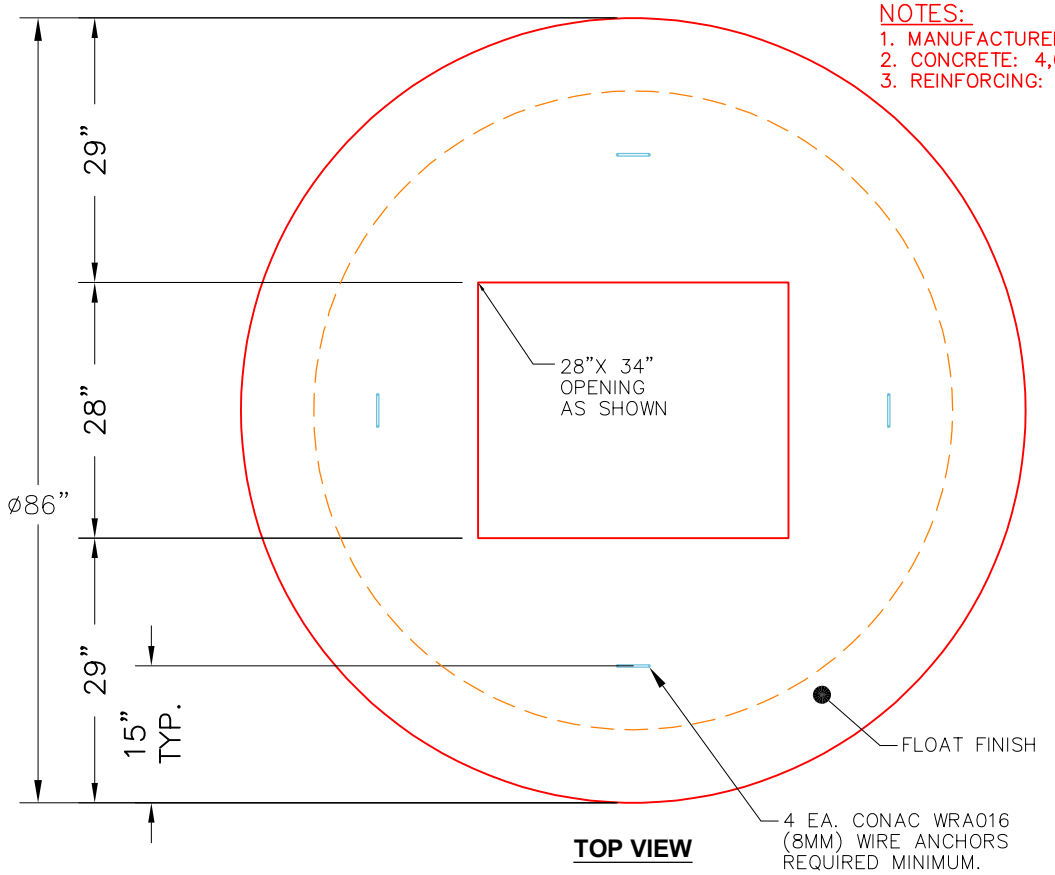

TOP VIEW

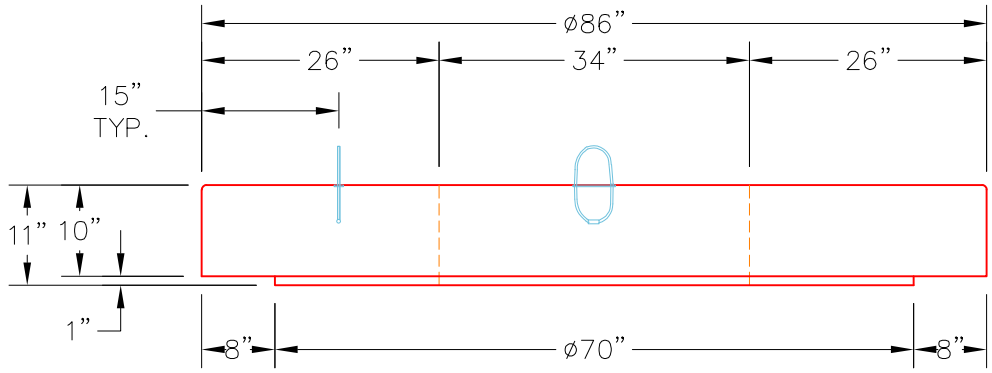

FRONT VIEW

Coating (Int): Coating (Ext):	Seam Up: Flat Seam Dn: Flat	Wall Thickness: 7"	Height (Ext): 10"	Weight (Net): 4406 lb Volume (Net): 1.12cu.yd

Job Name: 25-3062 Portland Bypass Job Location: Portland, TN Contractor: Scotty's Contracting & Stone, LLC	Plant: Beaver Dam 6/1/2026 8:23:08 AM	Tech: J. Coppage PC: C. Goff	

Structure ID: CB-34

P1 MH084BAVF MH BASE Custom Ht

P4) 28" x 34" - CASTING HEIGHT - 7"	0 lb
P3) 84" - MH FLAT TOP - TDOT NO 31RC (28"x34" HOLE) - 10"	5411 lb
P2) 84" - MH RISER - 36"	6966 lb
P1) 84" - MH BASE Custom Ht - 71"	15202 lb
1) CASTING - JBS-3123 MODIFIED SET	250 lb
2) 84" - Conseal CS-102 1.00"	0 lb
1) 28" x 34" - Conseal CS-102 1.00"	0 lb
2) Hole - 54	0 lb
1) Hole - 32	0 lb
1) Hole - 6	0 lb
Structure Total:	27829 lb

Structure Notes:
1. PER TDOT D-CB-12RC / ASTM C478 SPEC'S.
2. CONCRETE = 4,000 PSI AT 28 DAYS.
3. JBS 3123 MOD SINGLE SET BY ICAST
4. REINFORCING PER ASTM A615 (GRADE 60).
** PER TDOT STD DRAWING D-CB-12RC **
- TOP SLAB - DBL MAT #5 BARS.
- RISER (As .18)
- FLOOR (As .62) #5 BARS AT 6" C.C.E.W.

Rim: 814.57' Rim to Invert: 10.03' Slack: 0.86" Sump: 4.5" Step Position:

Position	Elev	Angle	Ext. (cw)	Pipe	Pipe OD	Connector	Hole	Horz Size	Up (_)	Offset
Invert 1	804.54'	0°	0"	42" RCP B WALL	51"	Hole 54	54"	58.651"	0"	0"
Invert 2	804.54'	90°	78.54"	24" RCP B WALL	30"	Hole 32	32"	32.829"	1.5"	0"
Invert 3	805.01'	180°	157.08"	42" RCP B WALL	51"	Hole 54	54"	58.651"	5.64"	0"
Invert 4										
Invert 5										
Invert 6										
Invert 7										
Invert 8										

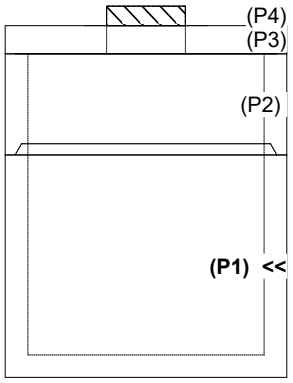

RIGHT-SIDE UP VIEW (int. dimensions)

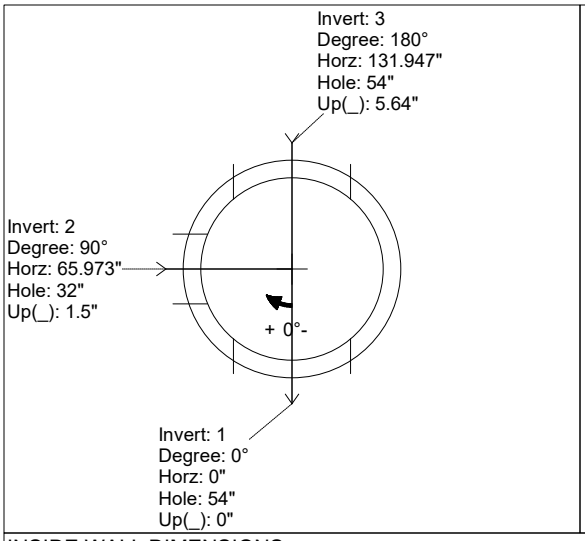

UPSIDE-DOWN VIEW (int. dimenions)

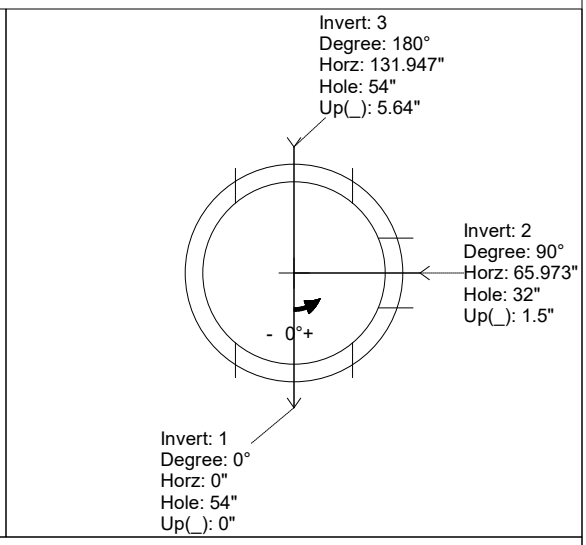

INSIDE WALL DIMENSIONS

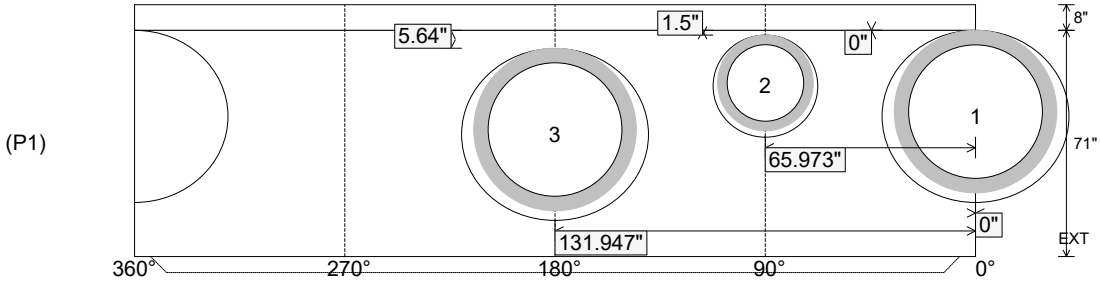

Coating (Int): Coating (Ext):	Seam Up: Tongue Seam Dn: n/a	Wall Thickness: 8" Floor Height: 8"	Height (Int): 71" Height (Ext): 79"	Weight (Net): 15202 lb Volume (Net): 3.88cu.yd

Job Name: 26-1066 - Gunning Pump Station & Force Main Job Location: Bardstown, KY Contractor: Connhurst, LLC	Plant: 100 6/2/2026 10:56:58 AM	Tech: Jared - F PC: E. Bradley	

Structure ID: W W (15)

P4 MH096RS36 MH RISER T/G

P6) 36" x 72" - HATCH (CAST FLUSH) - 0"	100 lb
P5) 96" - MH FLAT TOP w/36"x72" Hatch F/G - 17"	8315 lb
P4) 96" - MH RISER T/G - 36"	8968 lb
P3) 96" - MH RISER T/G - 96"	23694 lb
P2) 96" - MH RISER T/G - 84"	20688 lb
P1) 96" - MH BASE EF Cust. Ht. 12"F (14"EF =142"OD) T/n - 79"	35627 lb
1) JOINT WRAP - 12" WD x 096" MAC WRAP	0 lb
1) SPECIAL Internal Coating	0 lb
4) 96" - Conseal CS-231 1.00" (Double)	0 lb
1) 36" x 72" - Conseal CS-231 1.00" (Double)	0 lb
2) Hole - 12	0 lb
1) PSX - 8QRS DD	6 lb
1) PSX - 16M DD	8 lb
1) PSX - 12M DD	8 lb

Structure Total:	97415 lb

Rim: 559' Rim to Invert: 17.3' Slack: 0" Sump: 104.4" Step Position:

Structure Notes: .
1. PER ASTM C478 SPECIFICATIONS.
2. CONCRETE = 4,000 PSI AT 28 DAYS.
3. NO STEPS AND NO INVERT CHANNEL.
4. HATCH SUPPLIED BY OTHERS.
5. INSIDE OF STRUCTURE TO BE SANDBLASTED,THEN A COATING OF TNEMEC 218 TO BE APPLIED, FOLLOWED BY A COATING OF TNEMEC 434, FOLLOWED BY A COATING OF TNEMEC 435.

.
REINFORCING PER ASTM A615 (GRADE 60).
- TOP SLAB (As .31) #5 BARS AT 6" C.C.E.W.
- RISER/WALLS (As .18)
- FLOOR (As .37) #5 BARS AT 10" C.C.E.W. (DOUBLE MAT)

Position	Elev	Angle	Ext. (cw)	Pipe	Pipe OD	Connector	Hole	Horz Size	Up (_)	Offset
Invert 1										
Invert 2										
Invert 3										
Invert 4										
Invert 5										
Invert 6										
Invert 7										
Invert 8										

RIGHT-SIDE UP VIEW (int. dimensions)

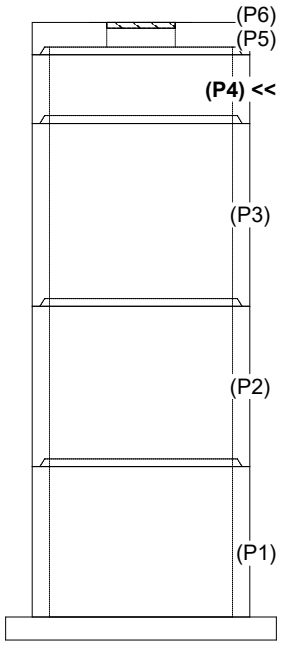

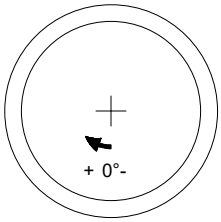

INSIDE WALL DIMENSIONS

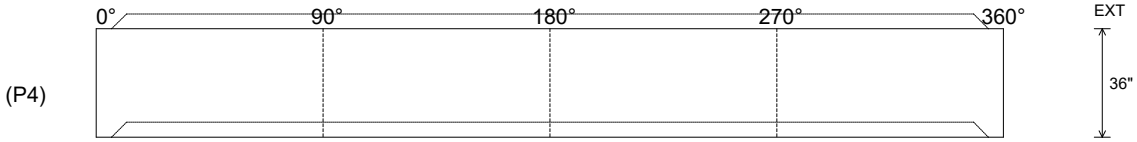

Coating (Int): Coating (Ext):	Seam Up: Tongue Seam Dn: Groove	Wall Thickness: 9" Floor Height: 0"	Height (Int): 36" Height (Ext): 36"	Weight (Net): 8968 lb Volume (Net): 2.29cu.yd

GENERAL NOTES:

1. PER SECTION 605 OF KYTC STANDARD SPECS FOR ROAD & BRIDGE CONSTRUCTION
   - KYTC STAMP REQUIRED
   - WEEP HOLES REQUIRED
2. LOAD REQUIREDMENTS: KY-HL93 (KY TABLE 1)
3. REINFORCEMENT PER ATTACHED KYTC TABLE 1
4. COVER DEPTH: 10'
5. CONCRETE: 5,000 PSI AT 28 DAYS
6. JOINT SEALANT: 1" BUTYL MASTIC (CS-102)
   EXTERIOR JOINT WRAP: 12" WIDE (CS-212)
7. WEIGHT: 8' X 6' RCBC = 3,138 LBS / LF
   (5'-9" LONG SECTION = 18,044 LBS)

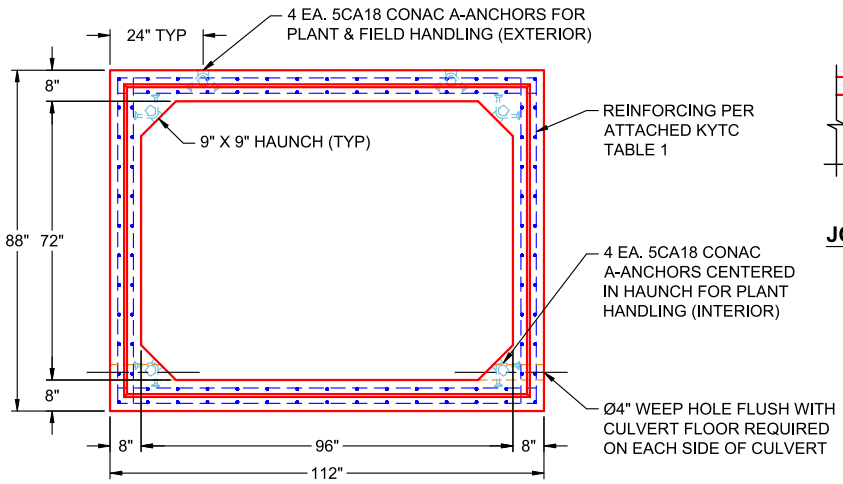

END VIEW
TYPICAL

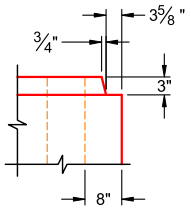

JOINT DETAIL (TYP)
NTS

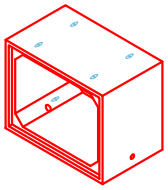

COMPONENT ISOMETRIC VIEW

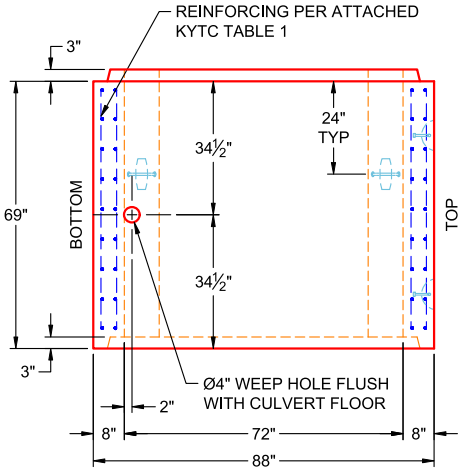

VIEW A
PC 13
(UPRIGHT IN MOLD)

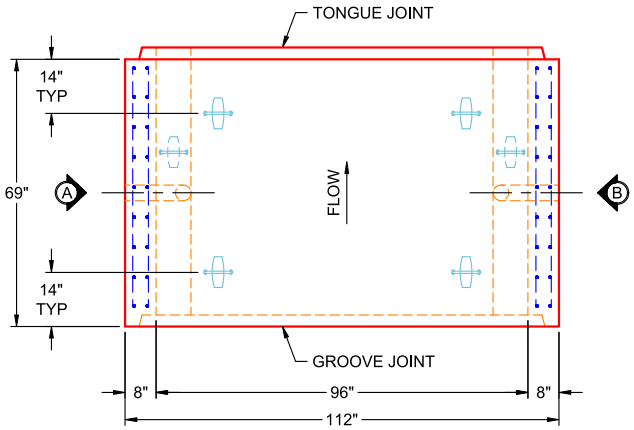

PLAN VIEW
PC 13
(UPRIGHT IN MOLD)

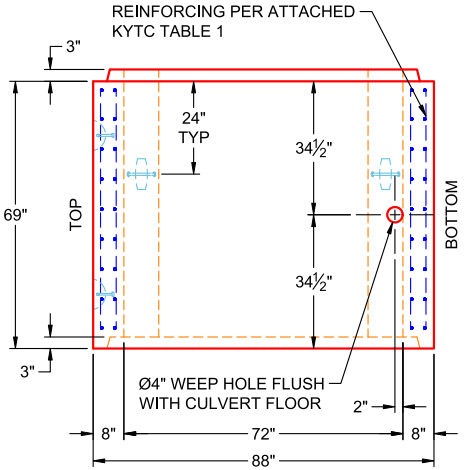

VIEW B
PC 13
(UPRIGHT IN MOLD)

PRODUCTION WORK ORDER	PRODUCT I.D.: BC096072-08WLF-9H	DESCRIPTION: 96" X 72" X 69" BOX CULVERT (8" WALLS & 9" HAUNCH)	
QUALITY CONTROL CHECKLIST	PRODUCT VIEW: RIGHT SIDE UP	CUSTOMER: JIM SMITH CONTRACTING	
☐ ALL DIMENSIONS CORRECT.	PLANT: BEAVER DAM, KY	PROJECT: KYTC MCCRACKEN CO. CALL 200 (ID 241301)	
☐ LIFTERS INSTALLED INSIDE.	WEIGHT: 18,044 LBS	STRUCTURE: ST. 43+62 (PC 13)	
☐ RECESS WITH HAUNCHES CORRECT.	TOP SECTION JOINT: TONGUE	ORDER NO: 24-1643B	
☐ REINFORCING CORRECT.	BASE SECTION JOINT: GROOVE	PE: J.H. ROSS	DRAWING: K. CARDWELL
☐ SURFACE QUALITY ACCEPTABLE.	QC CHECK INITIALS:	DATE: 05/28/26	SCALE: NTS / PG. 1 OF 1
☐ LIFTERS INSTALLED OUTSIDE.			
☐ PRODUCT SQUARE.			

THIS DRAWING IS THE PROPERTY OF INFRASTRUCTURE PRECAST, INC. ANY USE OR DUPLICATION OF THIS DRAWING WITHOUT PRIOR AUTHORIZATION IS STRICTLY PROHIBITED.

Job Name: 24-1643B - KYTC McCracken Co. Call 200 (ID 241301)
Job Location: Paducah, KY
Contractor: Jim Smith Contracting Co, LLC

Structure ID: St. 43+62 (PC 13)

P1 BC096072-08WLF-9HC BOX CULVERT (08W/08F/08T) G/T

Plant: 100
5/28/2026 7:51:19 AM
Tech: J. Horsley
PC: C. Goff

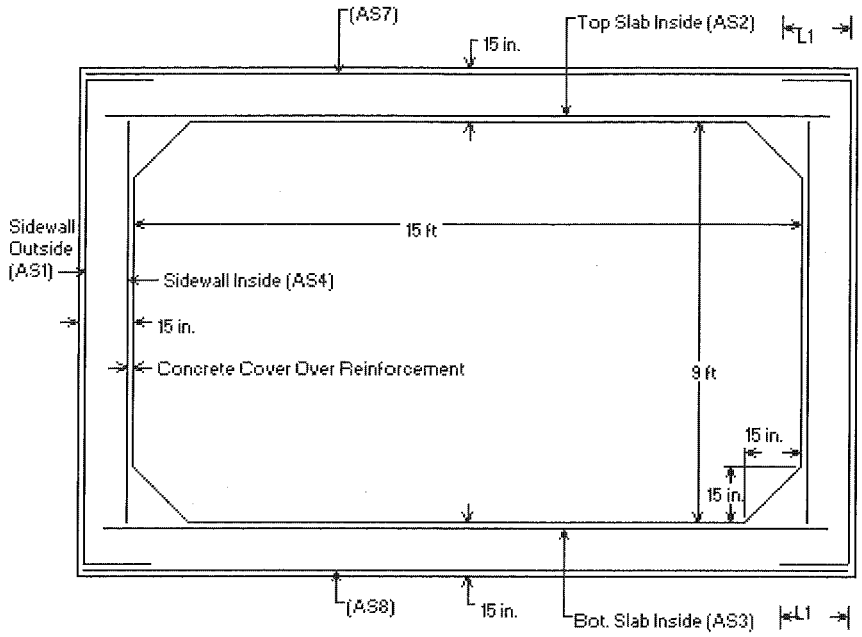

* <L1> is Splice Length
* (AS7) is Top Slab Outside
* (AS8) is Bottom Slab Outside
* See Box Culvert Design Summary Sheet for transverse and distribution reinforcement, as required.
* For sidewall thicknesses of 6 in. and above, extend AS2 and AS3 a min. of 4 in. beyond the inside face of the sidewall. For thicknesses less than 6 in., extend AS2 and AS3 at least to within 1-1/2 in. of the outside face of the sidewall.

Notes:

1) Other reinforcement schemes that provide the required reinforcement areas at all locations identified in the program output are acceptable.
2) Longitudinal reinforcement is not shown for clarity, see AASHTO M259 for longitudinal reinforcement and for additional requirements.

KY Table 1

Precast Culvert KYHL-93 Design Table

	Design Earth Cover, ft	As1	As2	As3	As4	As7	As8	As5	As6
8x6x8	0<2	0.267	0.536	0.382	0.192	0.192	0.192	0.192	0.192
	2<3	0.266	0.458	0.382	0.192	0.192	0.192	0.192	0.192
	3-5	0.237	0.392	0.359	0.192	0.192	0.192		
	10	0.244	0.365	0.38	0.192	0.192	0.192		
	15	0.321	0.489	0.505	0.192	0.192	0.192		
	20	0.408	0.627	0.644	0.192	0.192	0.192		
	25	0.502	0.774	0.791	0.192	0.192	0.192		
	30	0.602	0.928	0.946	0.192	0.192	0.192		
	35	0.708	1.089	1.108	0.192	0.192	0.192		

	Design Earth Cover, ft	As1	As2	As3	As4	As7	As8	As5	As6
8x7x8	0<2	0.245	0.557	0.403	0.192	0.192	0.192	0.197	0.192
	2<3	0.243	0.479	0.403	0.192	0.192	0.192	0.192	0.192
	3-5	0.215	0.409	0.378	0.192	0.192	0.192		
	10	0.225	0.378	0.396	0.192	0.192	0.192		
	15	0.295	0.507	0.526	0.192	0.192	0.192		
	20	0.374	0.651	0.671	0.192	0.192	0.192		
	25	0.459	0.804	0.825	0.192	0.192	0.192		
	30	0.549	0.965	0.987	0.192	0.192	0.192		
	35	0.644	1.134	1.157	0.192	0.192	0.192		

	Design Earth Cover, ft	As1	As2	As3	As4	As7	As8	As5	As6
8x8x8	0<2	0.226	0.575	0.42	0.192	0.192	0.192	0.203	0.192
	2<3	0.224	0.494	0.42	0.192	0.192	0.192	0.192	0.192
	3-5	0.201	0.423	0.393	0.192	0.192	0.192		
	10	0.211	0.386	0.407	0.192	0.192	0.192		
	15	0.276	0.518	0.54	0.192	0.192	0.192		
	20	0.349	0.665	0.688	0.192	0.192	0.192		
	25	0.427	0.822	0.846	0.192	0.192	0.192		
	30	0.51	0.988	1.013	0.192	0.192	0.192		

Default Configuration (page 1)

Default Parameters

Data Directory: c:

Jeremiah.Littleton
Documents
BOXCAR3.1

○ SI Unit File ◉ Customary US Unit File

Section Length 8 ft

Box Geometry

	SPAN < / ft				SPAN > / ft			
Top Slab Thickness	{Span/	12	+ 1 }	in.	{Span/	12	+ 0 }	in.
Bottom Slab Thickness	{Span/	12	+ 1 }	in.	{Span/	12	+ 0 }	in.
Sidewall Thickness	{Span/	12	+ 1 }	in.	{Span/	12	+ 0 }	in.
Horizontal Haunch Length	{Span/	12	+ 1 }	in.	{Span/	12	+ 0 }	in.
Vertical Haunch Length	{Span/	12	+ 1 }	in.	{Span/	12	+ 0 }	in.

Clear Concrete Covers

Top Slab Outside Face	2	in.	(MINIMUM DEPTH OF FILL < 2 ft)
Top Slab Outside Face	1	in.	(MINIMUM DEPTH OF FILL >= 2 ft)
Bottom Slab Outside Face	1	in.	
Sidewall Outside Face	1	in.	
Top Slab Inside Face	1	in.	
Bottom Slab Inside Face	1	in.	
Sidewall Inside Face	1	in.	

Reinforcement Type: Welded Wire

Material Properties

Main Reinforcement Yield Strength	65000	psi
Design Concrete Strength	5000	psi
Concrete Unit Weight	150	pcf
Stirrup Reinforcement Developable Yield Stress	60000	psi
Total Service Stress Limit	100	%

Restore Default Settings

Next Page >> | Return to Main Menu

Default Configuration (page 2)

Design Code: AASHTO - LRFD

Strength Reduction Factors

Design Code

Flexure	1
Shear	0.9

Axial Thrust Load Factor: User Specified 1

Crack Width (CHBDC Only) 0.25 mm

Reinforcement Diameter

		Diameter				Maximum Spacing	
Sidewall Outside	(AS1)	{ 0.05	* Sidewall Thickness	+ 0 }	in.	4	in.
Top Inside	(AS2)	{ 0.05	* Top Slab Thickness	+ 0 }	in.	4	in.
Bottom Inside	(AS3)	{ 0.05	* Bottom Slab Thickness	+ 0 }	in.	4	in.
Sidewall Inside	(AS4)	{ 0.05	* Sidewall Thickness	+ 0 }	in.	4	in.
Top Outside	(AS7)	{ 0.05	* Top Slab Thickness	+ 0 }	in.	4	in.
Bottom Outside	(AS8)	{ 0.05	* Bottom Slab Thickness	+ 0 }	in.	4	in.

Soil Load Data

Soil Unit Weight	120	pcf
Minimum Lateral Pressure Coefficient	0.25	
Maximum Lateral Pressure Coefficient	0.5	

Vertical Arching Factor: Embankment/Compacted

<<Previous Page | Next Page >> | Return to Main Menu

Boxcar - Default (page 3) [illegible]

Live Load Data

Live Load Type (Max 2)	Magnitude (N)		Footprint	User Specified (Not by Code) Length		Width	
☑ HS-Series	25	tons	☑ By Code	10	in.	20	in.
☑ Interstate/Tandem	25	kips	☑ By Code	10	in.	20	in.
☐ Cooper Series	80	kips	☑ By Code	0	in.	0	in.
☐ CHBDC Truck	140	kips	☑ By Code	10	in.	24	in.
☐ Tandem/Tridem	140	kips	☐ By Code	10	in.	20	in.
☐ Other	10	kips	☐ By Code	10	in.	20	in.
☐ None							

Direction of Traffic: Parallel To Span

Impact Factor Options: Design Code

Impact Factor (User Def) 1

Lane Load 0 lb/ft

Live Load Distribution Factor (LLDF): Design Code 1.15

Interstate/Tandem Truck Wheel Layout

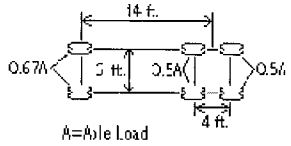

Fluid Loads

Depth of Fluid	1	* Rise
Fluid Unit Weight	62.5	pcf

Surcharge Loads

Uniform Vertical	0	lb/ft
Lateral - Top of Culvert (LLTC)	90	lb/ft
Lateral - Bottom of Culvert (LLBC)	90	lb/ft

<<Previous Page | Next Page >> | Return to Main Menu

GENERAL NOTES:

1. PER SECTION 605 OF KYTC STANDARD SPECS FOR ROAD & BRIDGE CONSTRUCTION
2. LOAD REQUIREDMENTS: KY-HL93 (KY TABLE 1)
3. REINFORCEMENT PER ATTACHED KYTC TABLE 1
4. COVER DEPTH: 0' - 4'
5. CONCRETE: 5,000 PSI AT 28 DAYS
6. JOINT SEALANT: 1" BUTYL MASTIC (CS-102)
   EXTERIOR JOINT WRAP: 12" WIDE (CS-212)
7. WEIGHT: 6' X 4' RCBC = 2,354 LBS / LF
   (5'-9" LONG SECTION = 13,537 LBS)

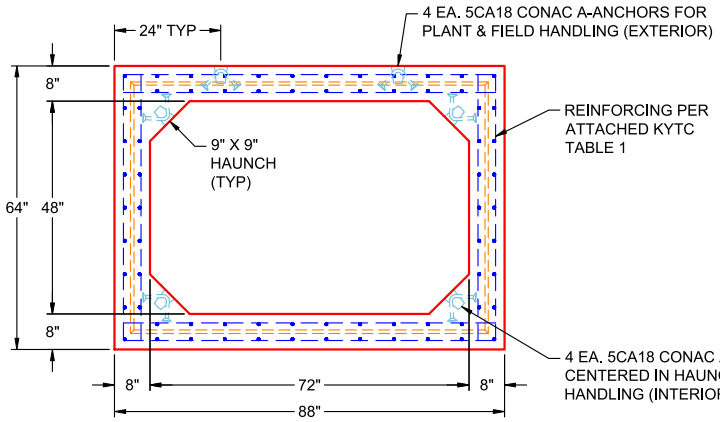

END VIEW
TYPICAL

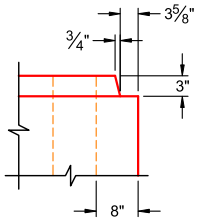

JOINT DETAIL (TYP)
NTS

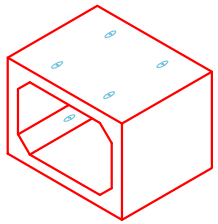

COMPONENT ISOMETRIC VIEW

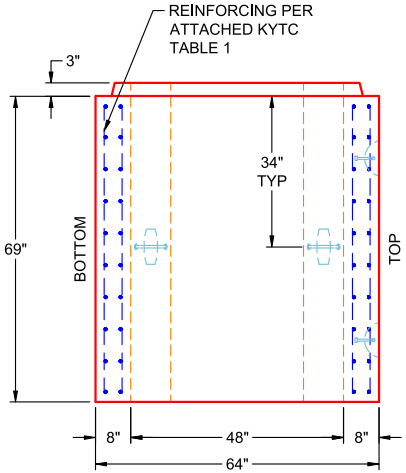

VIEW A
SEC V
(UPRIGHT IN MOLD)

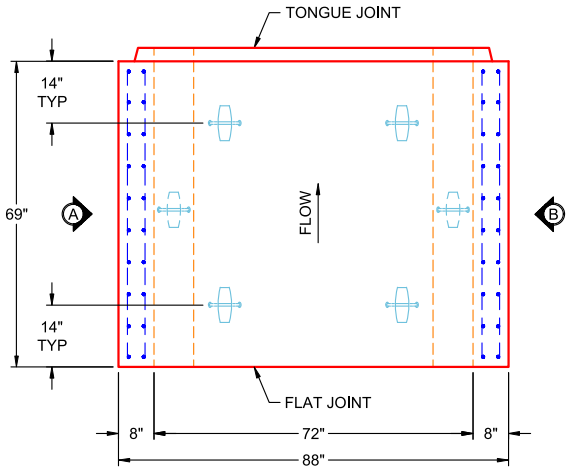

PLAN VIEW
SEC V
(UPRIGHT IN MOLD)

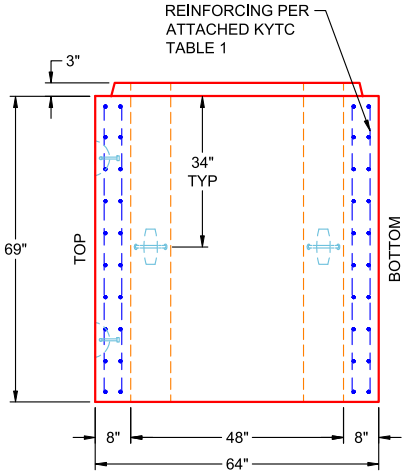

VIEW B
SEC V
(UPRIGHT IN MOLD)

PRODUCTION WORK ORDER	PRODUCT I.D.: BC048072-08WLF-9H	DESCRIPTION: 72" X 48" X 69" BOX CULVERT (8" WALLS & 9" HAUNCH)		
QUALITY CONTROL CHECKLIST	PRODUCT VIEW: RIGHT SIDE UP	CUSTOMER: ERNIE DAVIS & SONS MECHANICAL, INC.		
☐ ALL DIMENSIONS CORRECT.	PLANT: BEAVER DAM, KY	PROJECT: HUNTER'S RIDGE PH 1		
☐ LIFTERS INSTALLED INSIDE.	WEIGHT: 13,537 LBS	STRUCTURE: BC 6 X 4 (SEC V)		
☐ RECESS WITH HAUNCHES CORRECT.	TOP SECTION JOINT: TONGUE	ORDER NO: 25-2898		
☐ REINFORCING CORRECT.	BASE SECTION JOINT: FLAT	PE: J.H. ROSS	DRAWING: K. CARDWELL	
☐ SURFACE QUALITY ACCEPTABLE.	QC CHECK INITIALS:	DATE: 05/29/26	SCALE: NTS	PG. 1 OF 1
☐ LIFTERS INSTALLED OUTSIDE.				
☐ PRODUCT SQUARE.				

THIS DRAWING IS THE PROPERTY OF INFRASTRUCTURE PRECAST, INC. ANY USE OR DUPLICATION OF THIS DRAWING WITHOUT PRIOR AUTHORIZATION IS STRICTLY PROHIBITED.

Job Name: 25-2898 - Hunter's Ridge Ph.1
Job Location: Owensboro, KY
Contractor: Ernie Davis & Sons Mechanical, Inc.

Structure ID: BC 6 x 4 (Sec V)

P1 BC048072-08WLF-9H BOX CULVERT (08W/08F/08T) No Groove F/T

Plant: 100
5/29/2026 8:41:23 AM
Tech: Jared - A
PC: A. Chambers

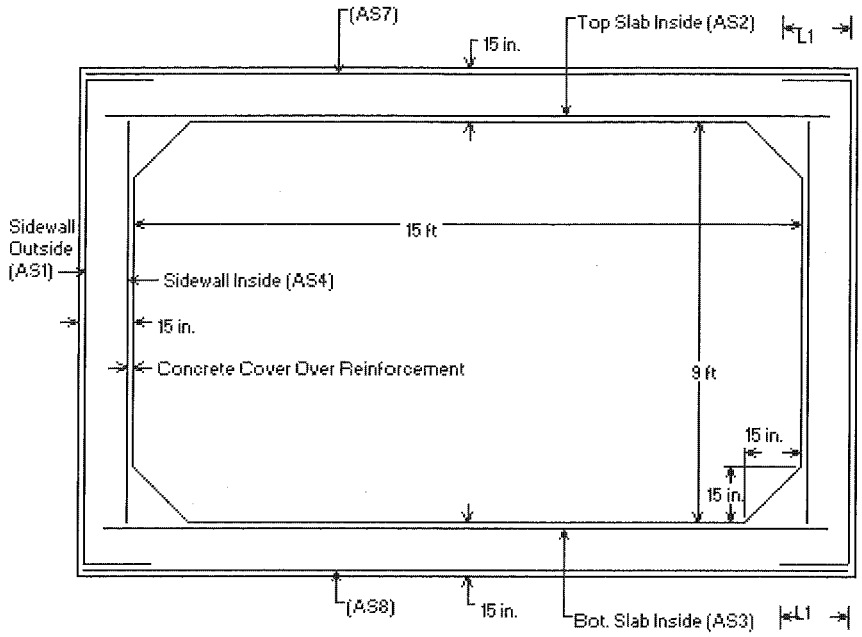

* <L1> is Splice Length
* (AS7) is Top Slab Outside
* (AS8) is Bottom Slab Outside
* See Box Culvert Design Summary Sheet for transverse and distribution reinforcement, as required.
* For sidewall thicknesses of 6 in. and above, extend AS2 and AS3 a min. of 4 in. beyond the inside face of the sidewall. For thicknesses less than 6 in., extend AS2 and AS3 at least to within 1-1/2 in. of the outside face of the sidewall.

Notes:

1) Other reinforcement schemes that provide the required reinforcement areas at all locations identified in the program output are acceptable.
2) Longitudinal reinforcement is not shown for clarity, see AASHTO M259 for longitudinal reinforcement and for additional requirements.

KY Table 1

Precast Culvert KYHL-93 Design Table

	Design Earth Cover, ft	As1	As2	As3	As4	As7	As8	As5	As6
6x4x7	0<2*	0.202	0.421	0.266	0.168	0.192	0.168	0.192	0.192
	2<3	0.251	0.368	0.288	0.168	0.168	0.168		
	3-5	0.19	0.271	0.24	0.168	0.168	0.168		
	10	0.168	0.228	0.234	0.168	0.168	0.168		
	15	0.216	0.306	0.313	0.168	0.168	0.168		
	20	0.275	0.391	0.398	0.168	0.168	0.168		
	25	0.338	0.479	0.487	0.168	0.168	0.168		
	30	0.404	0.571	0.579	0.168	0.168	0.168		
	35	0.473	0.667	0.675	0.168	0.168	0.168		

*top slab 8"

	Design Earth Cover, ft	As1	As2	As3	As4	As7	As8	As5	As6
6x5x7	0<2*	0.192	0.449	0.291	0.168	0.192	0.168	0.192	0.192
	2<3	0.22	0.398	0.316	0.168	0.168	0.168		
	3-5	0.168	0.294	0.262	0.168	0.168	0.168		
	10	0.168	0.243	0.252	0.168	0.168	0.168		
	15	0.188	0.326	0.336	0.168	0.168	0.168		
	20	0.238	0.417	0.427	0.168	0.168	0.168		
	25	0.291	0.512	0.522	0.168	0.168	0.168		
	30	0.347	0.611	0.622	0.168	0.168	0.168		
	35	0.406	0.714	0.725	0.168	0.168	0.168		

*top slab 8"

	Design Earth Cover, ft	As1	As2	As3	As4	As7	As8	As5	As6
6x6x7	0<2*	0.192	0.47	0.311	0.168	0.192	0.168	0.192	0.192
	2<3	0.195	0.421	0.337	0.168	0.168	0.168		
	3-5	0.168	0.311	0.277	0.168	0.168	0.168		
	10	0.168	0.252	0.263	0.168	0.168	0.168		
	15	0.168	0.338	0.349	0.168	0.168	0.168		
	20	0.212	0.432	0.444	0.168	0.168	0.168		
	25	0.259	0.531	0.543	0.168	0.168	0.168		
	30	0.308	0.634	0.647	0.168	0.168	0.168		
	35	0.359	0.741	0.755	0.168	0.168	0.168		

*top slab 8"

Default Configuration (page 1)

Default Parameters

Data Directory: c:

Jeremiah.Littleton
Documents
BOXCAR3.1

○ SI Unit File ◉ Customary US Unit File

Section Length 8 ft

Box Geometry

	SPAN < / ft				SPAN > / ft			
Top Slab Thickness	{Span/	12	+ 1 }	in.	{Span/	12	+ 0 }	in.
Bottom Slab Thickness	{Span/	12	+ 1 }	in.	{Span/	12	+ 0 }	in.
Sidewall Thickness	{Span/	12	+ 1 }	in.	{Span/	12	+ 0 }	in.
Horizontal Haunch Length	{Span/	12	+ 1 }	in.	{Span/	12	+ 0 }	in.
Vertical Haunch Length	{Span/	12	+ 1 }	in.	{Span/	12	+ 0 }	in.

Clear Concrete Covers

Top Slab Outside Face	2	in.	(MINIMUM DEPTH OF FILL < 2 ft)
Top Slab Outside Face	1	in.	(MINIMUM DEPTH OF FILL >= 2 ft)
Bottom Slab Outside Face	1	in.	
Sidewall Outside Face	1	in.	
Top Slab Inside Face	1	in.	
Bottom Slab Inside Face	1	in.	
Sidewall Inside Face	1	in.	

Reinforcement Type: Welded Wire

Material Properties

Main Reinforcement Yield Strength	65000	psi
Design Concrete Strength	5000	psi
Concrete Unit Weight	150	pcf
Stirrup Reinforcement Developable Yield Stress	60000	psi
Total Service Stress Limit	100	%

Restore Default Settings

Next Page >> | Return to Main Menu

Default Configuration (page 2)

Design Code: AASHTO - LRFD

Strength Reduction Factors

Design Code

Flexure	1
Shear	0.9

Axial Thrust Load Factor: User Specified 1

Crack Width (CHBDC Only) 0.25 mm

Reinforcement Diameter

		Diameter				Maximum Spacing	
Sidewall Outside	(AS1)	{ 0.05	* Sidewall Thickness	+ 0 }	in.	4	in.
Top Inside	(AS2)	{ 0.05	* Top Slab Thickness	+ 0 }	in.	4	in.
Bottom Inside	(AS3)	{ 0.05	* Bottom Slab Thickness	+ 0 }	in.	4	in.
Sidewall Inside	(AS4)	{ 0.05	* Sidewall Thickness	+ 0 }	in.	4	in.
Top Outside	(AS7)	{ 0.05	* Top Slab Thickness	+ 0 }	in.	4	in.
Bottom Outside	(AS8)	{ 0.05	* Bottom Slab Thickness	+ 0 }	in.	4	in.

Soil Load Data

Soil Unit Weight	120	pcf
Minimum Lateral Pressure Coefficient	0.25	
Maximum Lateral Pressure Coefficient	0.5	

Vertical Arching Factor: Embankment/Compacted

<<Previous Page | Next Page >> | Return to Main Menu

Boxcar - Default (page 3) [illegible]

Live Load Data

Live Load Type (Max 2)	Magnitude (N)		Footprint	User Specified (Not by Code) Length		Width	
☑ HS-Series	25	tons	☑ By Code	10	in.	20	in.
☑ Interstate/Tandem	25	kips	☑ By Code	10	in.	20	in.
☐ Cooper Series	80	kips	☑ By Code	0	in.	0	in.
☐ CHBDC Truck	140	kips	☑ By Code	10	in.	24	in.
☐ Tandem/Tridem	140	kips	☐ By Code	10	in.	20	in.
☐ Other	10	kips	☐ By Code	10	in.	20	in.
☐ None							

Direction of Traffic: Parallel To Span

Impact Factor Options: Design Code

Impact Factor (User Def) 1

Lane Load 0 lb/ft

Live Load Distribution Factor (LLDF): Design Code 1.15

Interstate/Tandem Truck Wheel Layout

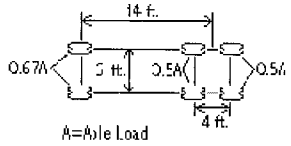

Fluid Loads

Depth of Fluid	1	* Rise
Fluid Unit Weight	62.5	pcf

Surcharge Loads

Uniform Vertical	0	lb/ft
Lateral - Top of Culvert (LLTC)	90	lb/ft
Lateral - Bottom of Culvert (LLBC)	90	lb/ft

<<Previous Page | Next Page >> | Return to Main Menu

Job Name: 25-2952 - KYTC Jefferson Co Call 106 (251315) Job Location: Indiana, KY Contractor: Louisville Paving and Construction	Plant: 100 6/17/2026 5:40:43 PM	Tech: J. Horsley - A PC: J. Jarvis	

Structure ID: 21A

P1 BX1818-06BA24 BOX BASE 6inW, 6inF F/n

P2) 18" x 18" - CASTING HEIGHT - 4"	0 lb
P1) 18" x 18" - BOX BASE 6inW, 6inF F/n - 24"	1508 lb
1) 18" x 18" - Conseal CS-102 1.00"	0 lb
1) Hole - 16	0 lb
Structure Total:	1508 lb

Structure Notes:
1. PER MSD YARD DRAIN / ASTM C-913 SPECS
2. CONCRETE: 4,000 PSI AT 28 DAYS
3. REINFORCEMENT: #4 BAR @ 12" C.C. E.W. (GRADE 60) - 2" MIN. REBAR CLEARANCE (TYP)
4. HOE 165-A FRAME & GRATE SUPPLIED BY OTHERS

Rim: 562.8' Rim to Invert: 2.5' Slack: 2" Sump: 0" Step Position:

Position	Elev	Angle	Ext. (cw)	Pipe	Pipe OD	Connector	Hole	Horz Size	Up (_)	Offset
Invert 1	560.3'	165°	13.625"	12" HDPE	14.5"	Hole 16	16"	16.564"	-2"	2.5"
Invert 2										
Invert 3										
Invert 4										
Invert 5										
Invert 6										
Invert 7										
Invert 8										

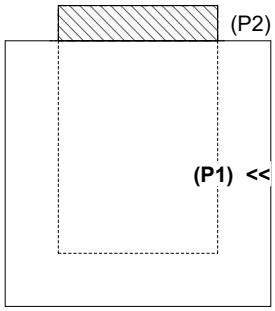

RIGHT-SIDE UP VIEW (int. dimensions)

UPSIDE-DOWN VIEW (int. dimenions)

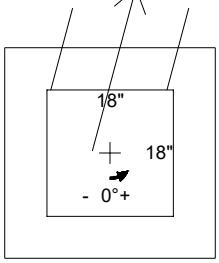

INSIDE WALL DIMENSIONS

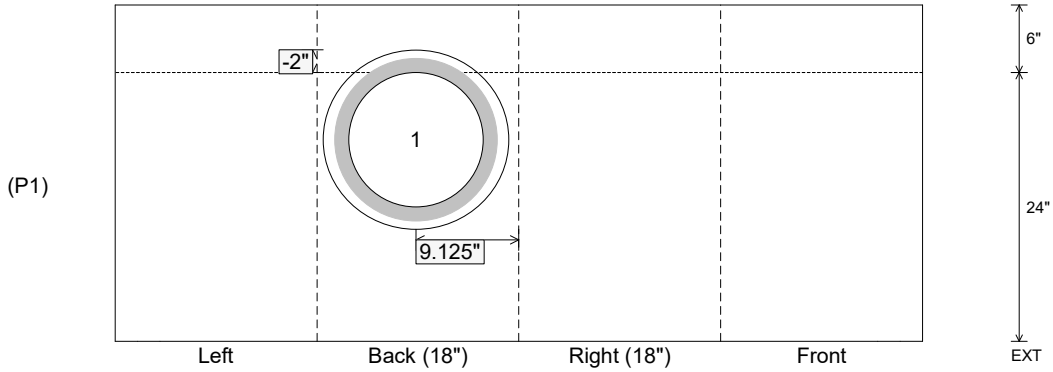

Coating (Int): Coating (Ext):	Seam Up: Flat Seam Dn: n/a	Wall Thickness: 6" Floor Height: 6"	Height (Int): 24" Height (Ext): 30"	Weight (Net): 1508 lb Volume (Net): 0.38cu.yd

Job Name: 25-2952 - KYTC Jefferson Co Call 106 (251315) Job Location: Indiana, KY Contractor: Louisville Paving and Construction	Plant: 100 6/12/2026 3:11:09 PM	Tech: J. Horsley - A PC: J. Jarvis	

Structure ID: 72

P2 BX2424-08R24 BOX RISER 8inW T/G

P4) 8" x 120" - CB INLET KY B 10' TOP F/G - 9"	1660 lb
P3) 24" x 120" - CB INLET KY B 10' BOTTOM SAG T/G - 17"	2650 lb
P2) 24" x 24" - BOX RISER 8inW T/G - 24"	2062 lb
P1) 24" x 24" - BOX BASE 8inW, 8inF, Variable Ht T/n - 40"	4340 lb
2) 24" x 24" - Conseal CS-102 1.00"	0 lb
1) Hole - 18	0 lb
Structure Total:	10712 lb

Structure Notes:

** KYTC STATE PROJECT **

1. PER KYTC CBI TYPE B (10') / ASTM C-913 SPECS
2. CONCRETE: 4,000 PSI AT 28 DAYS
3. REINFORCEMENT: #5 BAR @ 12" C.C. E.W. (GRADE 60) - 2" MIN. REBAR CLEARANCE (TYP)
4. KY-345 FRAMES & GRATE SUPPLIED BY OTHERS - POURED IN PLACE BY OTHERS

Rim: 552.09' Rim to Invert: 7.5' Slack: 0" Sump: 0" Step Position:

Position	Elev	Angle	Ext. (cw)	Pipe	Pipe OD	Connector	Hole	Horz Size	Up (_)	Offset
Invert 1										
Invert 2										
Invert 3										
Invert 4										
Invert 5										
Invert 6										
Invert 7										
Invert 8										

RIGHT-SIDE UP VIEW (int. dimensions)

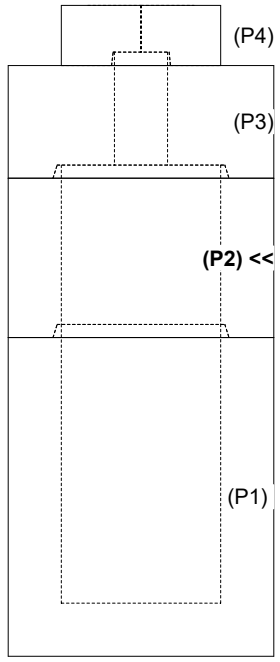

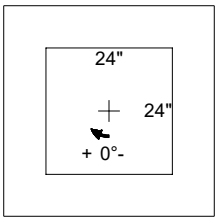

INSIDE WALL DIMENSIONS

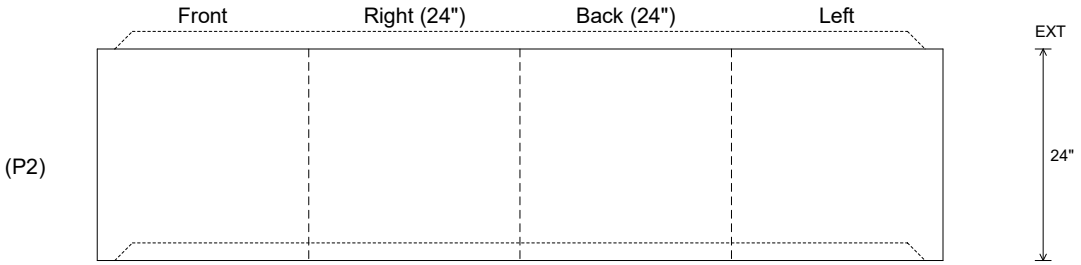

Coating (Int): Coating (Ext):	Seam Up: Tongue Seam Dn: Groove	Wall Thickness: 8" Floor Height: 0"	Height (Int): 24" Height (Ext): 24"	Weight (Net): 2062 lb Volume (Net): 0.53cu.yd

Job Name: 25-3193 - KYTC Kenton Co Call 328 (251320) Job Location: Independence, KY Contractor: Eaton Asphalt	Plant: 100 6/4/2026 4:51:26 PM	Tech: Jared - A PC: J. Jarvis	

Structure ID: 478

P1 BX2436-08BVF BOX BASE 8inW, 8inF, Variable Ht T/n

P3) 24" x 120" - CB INLET KY A 10' TOP RIGHT F/G - 10"	3398 lb
P2) 24" x 120" - CB INLET KY A 10' BOTTOM RIGHT T/G - 18"	5270 lb
P1) 24" x 36" - BOX BASE 8inW, 8inF, Variable Ht T/n - 33"	4181 lb
1) CASTING - HOE KY-206 F/C (KY TY1)	206 lb
1) This Structure Includes a Cast-in Item - KY-206 Frame (Supplied by iCast)	0 lb
1) 24" x 36" - Conseal CS-102 1.00"	0 lb
1) Hole - 24	0 lb
1) Hole - 20	0 lb
2) Hole - 8	0 lb
Structure Total:	13055 lb

Structure Notes:

** KYTC STATE PROJECT **

1. PER KYTC CBI TY A / ASTM C-913 SPECS
2. CONCRETE: 4,000 PSI AT 28 DAYS
3. REINFORCEMENT: #5 BAR @ 12" C.C. E.W. (GRADE 60) - 2" MIN. REBAR CLEARANCE (TYP)
4. NO STORM INVERT
5. NO STEPS
6. KY-206 FRAME & COVER "STORM" SUPPLIED BY ICAST - FRAME TO BE CAST INTO TOP PHASE TOP FLANGE SIDE UP

Rim: 897.38' Rim to Invert: 5.09' Slack: 0.08" Sump: 0" Step Position:

Position	Elev	Angle	Ext. (cw)	Pipe	Pipe OD	Connector	Hole	Horz Size	Up (_)	Offset
Invert 1	892.29'	270°	26"	18" ADS N-12	22"	Hole 24	24"	24"	-3"	0"
Invert 2	892.29'	0°	20"	15" ADS N-12	18"	Hole 20	20"	20"	-2.5"	0"
Invert 3	894.21'	0°	20"	4" HDPE (perf pipe)	4.8"	Hole 8	8"	8"	21"	0"
Invert 4	894.21'	180°	20"	4" HDPE (perf pipe)	4.8"	Hole 8	8"	8"	21"	0"
Invert 5										
Invert 6										
Invert 7										
Invert 8										

RIGHT-SIDE UP VIEW (int. dimensions)

UPSIDE-DOWN VIEW (int. dimenions)

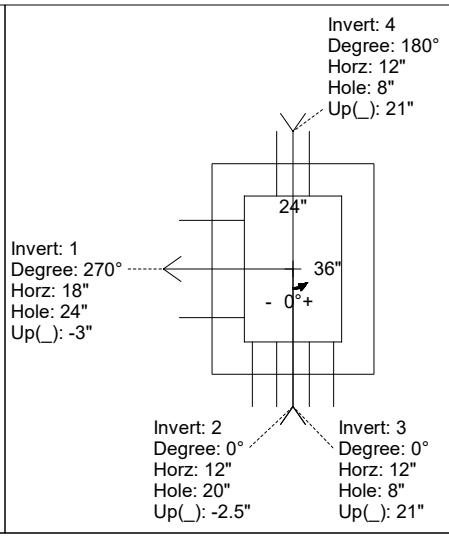

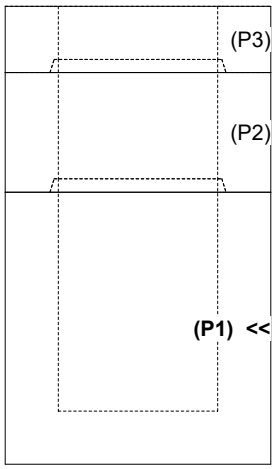

INSIDE WALL DIMENSIONS

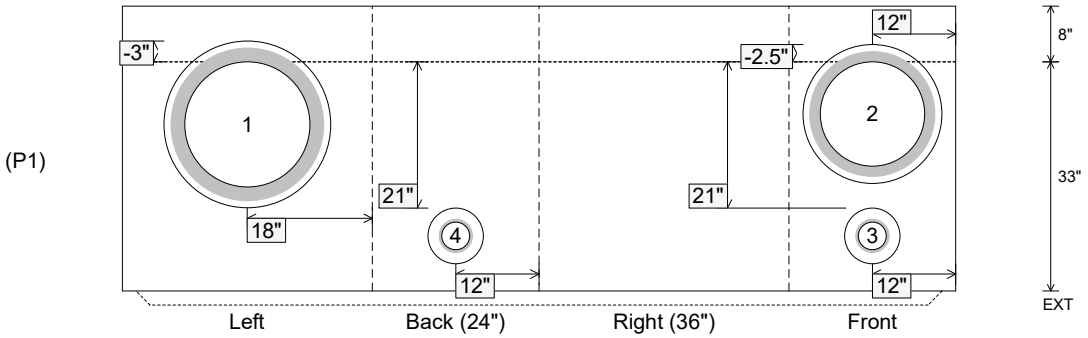

Coating (Int): Coating (Ext):	Seam Up: Tongue Seam Dn: n/a	Wall Thickness: 8" Floor Height: 8"	Height (Int): 33" Height (Ext): 41"	Weight (Net): 4181 lb Volume (Net): 1.07cu.yd

Job Name: 26-1843 - Dutch Bros Coffee Job Location: Paducah, KY 42003 Contractor: Ainsworth Land Development, LLC	Plant: 100 6/24/2026 9:31:42 AM	Tech: Jared - A PC: T. Lewis	

Structure ID: STR 100 ST-OCS

P1 BX4848-08BAVF BOX BASE 8inW, 8inF, Variable Ht F/n

P3) 23.75" - CASTING (cast in) - 4"	0 lb
P2) 48" x 48" - CB FLAT TOP 8"W SPEC. (HOE MCS-295-B) F/F - 6"	1986 lb
P1) 48" x 48" - BOX BASE 8inW, 8inF, Variable Ht F/n - 21"	4953 lb
1) This Structure Includes a Cast-in Item - HOE MCS-295-B Frame (Supplied by iCast)	0 lb
1) CASTING - HOE MCS-295B F/G	123 lb
1) 48" x 48" - Conseal CS-102 1.00"	0 lb
1) DOGHOUSE INVRTD - 16"x15.5"	0 lb
4) Weir n/n - 48"x6.625"	0 lb
1) Weir n/n - 12"x6"	0 lb
1) Hole - 8	0 lb
Structure Total:	7063 lb

Structure Notes:
1. PER ASTM C-913 SPECIFICATIONS
2. CONCRETE: 4,500 PSI AT 28 DAYS
3. REINFORCEMENT: #5 BAR @ 12" C.C. E.W. (GRADE 60) - 2" MIN. REBAR CLEARANCE (TYP)
4. HOE MCS-295-B FRAME & BAR GRATE SUPPLIED BY ICAST - FRAME TO BE CAST INTO FLAT LID FLANGE SIDE UP
5. INVERT 7 OFFSET 15" FROM CENTER OF WALL
6. LIFTERS: 4 EA. 5CA14 CONAC A-ANCHORS FOR PLANT & FIELD HANDLING - INSTALLED IN FLOOR

Rim: 345.6' Rim to Invert: 2.3' Slack: 0.6" Sump: 0" Step Position:

Position	Elev	Angle	Ext. (cw)	Pipe	Pipe OD	Connector	Hole	Horz Size	Up (_)	Offset
Invert 1	343.3'	250°	28.875"	12" HP STORM	14.5"	DOGHOUSE INVRTD 16"x15.5"	16" x 15.5"	17.027"	-1.125"	8"
Invert 2	344.5'	0°	32"	48" x 6.625" Weir	48" x 6.625"	Weir 48"x6.625"	48" x 6.625"	48"	14.375"	0"
Invert 3	344.5'	90°	32"	48" x 6.625" Weir	48" x 6.625"	Weir 48"x6.625"	48" x 6.625"	48"	14.375"	0"
Invert 4	344.5'	180°	32"	48" x 6.625" Weir	48" x 6.625"	Weir 48"x6.625"	48" x 6.625"	48"	14.375"	0"
Invert 5	344.5'	270°	32"	48" x 6.625" Weir	48" x 6.625"	Weir 48"x6.625"	48" x 6.625"	48"	14.375"	0"
Invert 6	344'	90°	32"	12" x 6" Weir	12" x 6"	Weir 12"x6"	12" x 6"	12"	8.375"	0"
Invert 7	343.3'	90°	17"	6" PVC SDR35	6.25"	Hole 8	8"	8"	-0.125"	-15"
Invert 8										

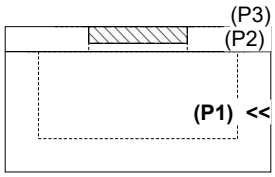

RIGHT-SIDE UP VIEW (int. dimensions)

UPSIDE-DOWN VIEW (int. dimenions)

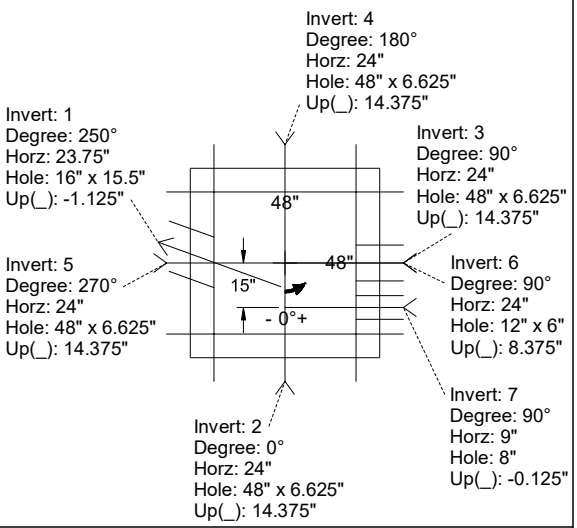

INSIDE WALL DIMENSIONS

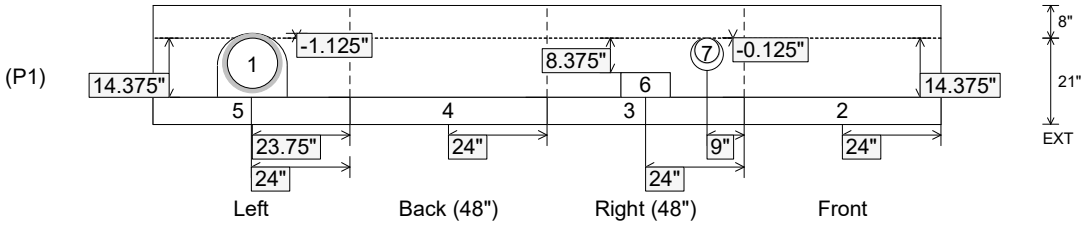

Coating (Int): Coating (Ext):	Seam Up: Flat Seam Dn: n/a	Wall Thickness: 8" Floor Height: 8"	Height (Int): 21" Height (Ext): 29"	Weight (Net): 4953 lb Volume (Net): 1.26cu.yd

Job Name: 24-3511 Coles Ferry Section 18 & 19 Job Location: Lebanon, TN Contractor: Covenant Constructors, LLC	Plant: Beaver Dam, KY 6/18/2026 10:58:48 AM	Tech: J. Horsley PC: A. Chambers	

Structure ID: CB13 - add 24in HT Riser

P1 BX2896-06RVF BOX RISER 6inW, Variable Ht FTB F/F

P1) 28" x 96" - BOX RISER 6inW, Variable Ht FTB F/F - 24"	3273 lb
1) CASTING - JBS 3101 Triple Set (F/G/H)	1857 lb
4) LINTEL BAR SLOT n/n - 7"x1"	0 lb
Structure Total:	5130 lb

Structure Notes: .
1. PER ASTM C913 SPECIFICATIONS.
2. CONCRETE = 4,000 PSI AT 28 DAYS.
3. NO INVERT CHANNEL.
4. CASTING BY ICAST (3ea. JBS 3101 F/G/H)

.
REINFORCING PER ASTM A615 (GRADE 60).
- WALLS (As .12) #5 BARS AT 12" C.C.E.W.
- FLOOR (As .12) #5 BARS AT 12" C.C.E.W.

Rim: 2' Rim to Invert: 0.08' Slack: 0" Sump: 0" Step Position:

Position	Elev	Angle	Ext. (cw)	Pipe	Pipe OD	Connector	Hole	Horz Size	Up (_)	Offset
Invert 1										
Invert 2										
Invert 3	1.92'	90°	36"	7" x 1" LINTEL BAR SLOT	7" x 1"	LINTEL BAR SLOT 7"x1"	7" x 1"	7"	23"	-18"
Invert 4	1.92'	90°	72"	7" x 1" LINTEL BAR SLOT	7" x 1"	LINTEL BAR SLOT 7"x1"	7" x 1"	7"	23"	18"
Invert 5	1.92'	270°	36"	7" x 1" LINTEL BAR SLOT	7" x 1"	LINTEL BAR SLOT 7"x1"	7" x 1"	7"	23"	-18"
Invert 6	1.92'	270°	72"	7" x 1" LINTEL BAR SLOT	7" x 1"	LINTEL BAR SLOT 7"x1"	7" x 1"	7"	23"	18"
Invert 7										
Invert 8										

RIGHT-SIDE UP VIEW (int. dimensions)

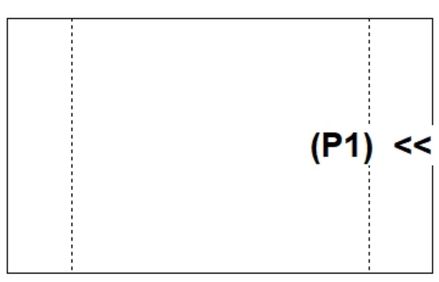

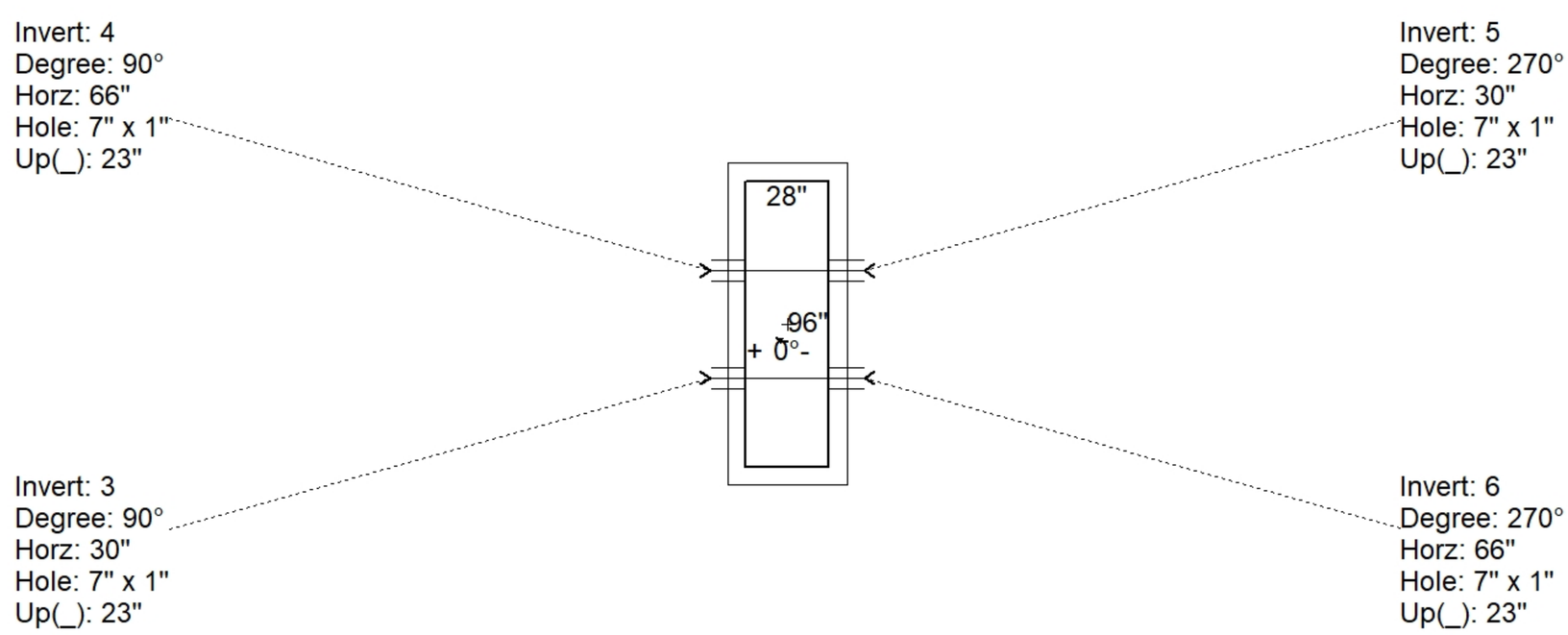

INSIDE WALL DIMENSIONS

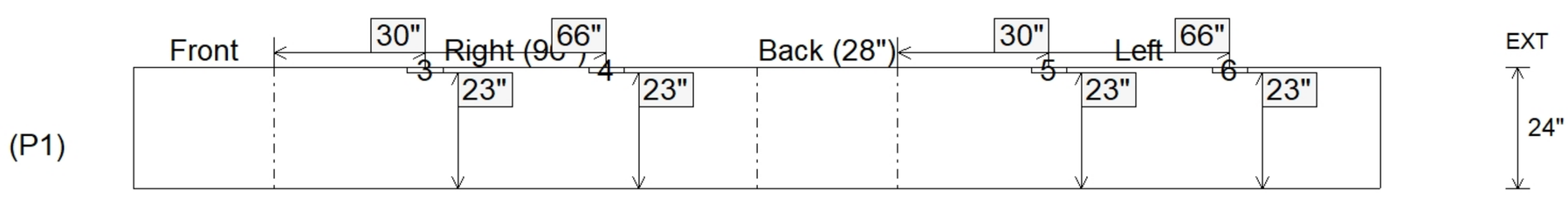

Coating (Int): Coating (Ext):	Seam Up: Flat Seam Dn: Flat	Wall Thickness: 6" Floor Height: 0"	Height (Int): 24" Height (Ext): 24"	Weight (Net): 3273 lb Volume (Net): 0.84cu.yd

Job Name: 24-3511 Coles Ferry Section 18 & 19 Job Location: Lebanon, TN Contractor: Covenant Constructors, LLC	Plant: Beaver Dam, KY 6/18/2026 10:58:14 AM	Tech: J. Horsley PC: A. Chambers	

Structure ID: CB6

P1 BX28640606-VH BOX BASE 6inW, 6inF, Variable Ht F/n

P2) 28" x 64" - CASTING HEIGHT - 6"	0 lb
P1) 28" x 64" - BOX BASE 6inW, 6inF, Variable Ht F/n - 25"	3416 lb
1) CASTING - JBS 3101 Double Set (F/G/H)	1238 lb
1) 28" x 64" - Conseal CS-102 1.00"	0 lb
2) Hole - 26	0 lb
1) Hole - 22	0 lb
2) LINTEL BAR SLOT n/n - 7"x1"	0 lb
Structure Total:	4654 lb

Structure Notes: .
1. PER ASTM C913 SPECIFICATIONS.
2. CONCRETE = 4,000 PSI AT 28 DAYS.
3. NO INVERT CHANNEL.

.
REINFORCING PER ASTM A615 (GRADE 60).
- TOP SLAB (As .62) #5 BARS AT 6" C.C.E.W.
- WALLS (As .12) #5 BARS AT 12" C.C.E.W.
- FLOOR (As .12) #5 BARS AT 12" C.C.E.W.

Rim: 571.82' Rim to Invert: 2.6' Slack: 0.2" Sump: 0" Step Position:

Position	Elev	Angle	Ext. (cw)	Pipe	Pipe OD	Connector	Hole	Horz Size	Up (_)	Offset
Invert 1	569.22'	0°	20"	18" RCP B WALL	23"	Hole 26	26"	26"	-2.5"	0"
Invert 2	569.22'	90°	38"	15" RCP B WALL	19.5"	Hole 22	22"	22"	-2.25"	0"
Invert 3	569.22'	180°	20"	18" RCP B WALL	23"	Hole 26	26"	26"	-2.5"	0"
Invert 4										
Invert 5	571.22'	90°	38"	7" x 1" LINTEL BAR SLOT	7" x 1"	LINTEL BAR SLOT 7"x1"	7" x 1"	7"	24"	0"
Invert 6	571.22'	270°	38"	7" x 1" LINTEL BAR SLOT	7" x 1"	LINTEL BAR SLOT 7"x1"	7" x 1"	7"	24"	0"
Invert 7										
Invert 8										

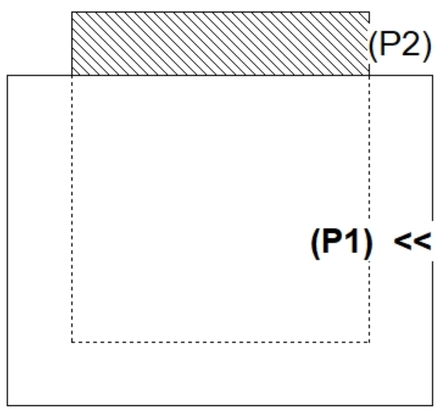

RIGHT-SIDE UP VIEW (int. dimensions)

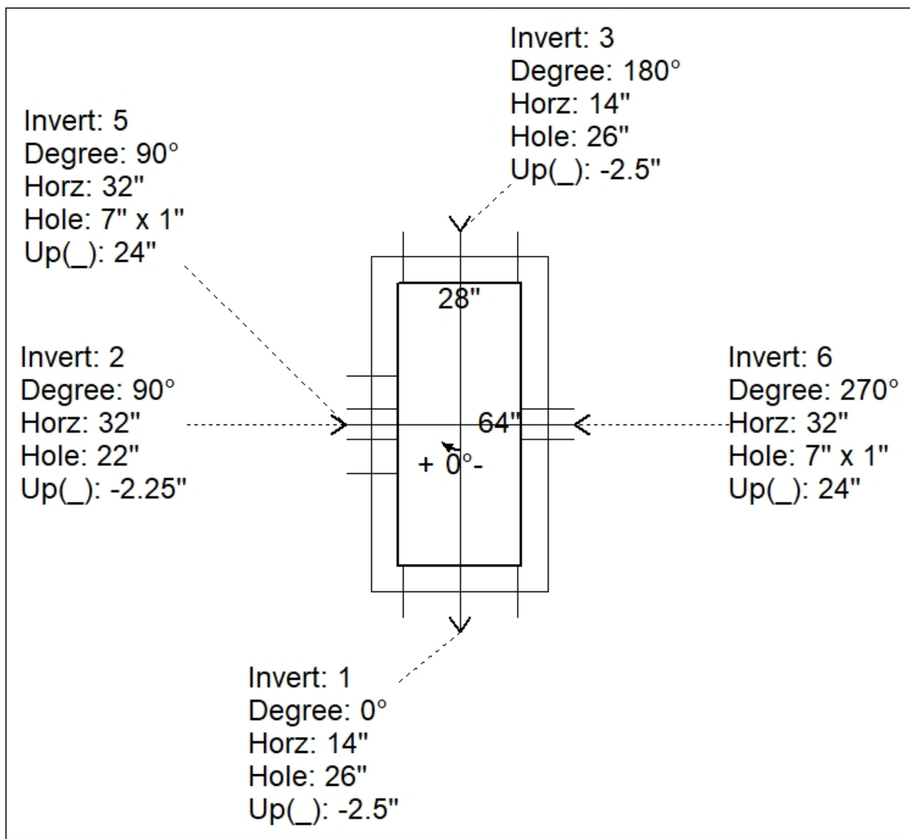

UPSIDE-DOWN VIEW (int. dimenions)

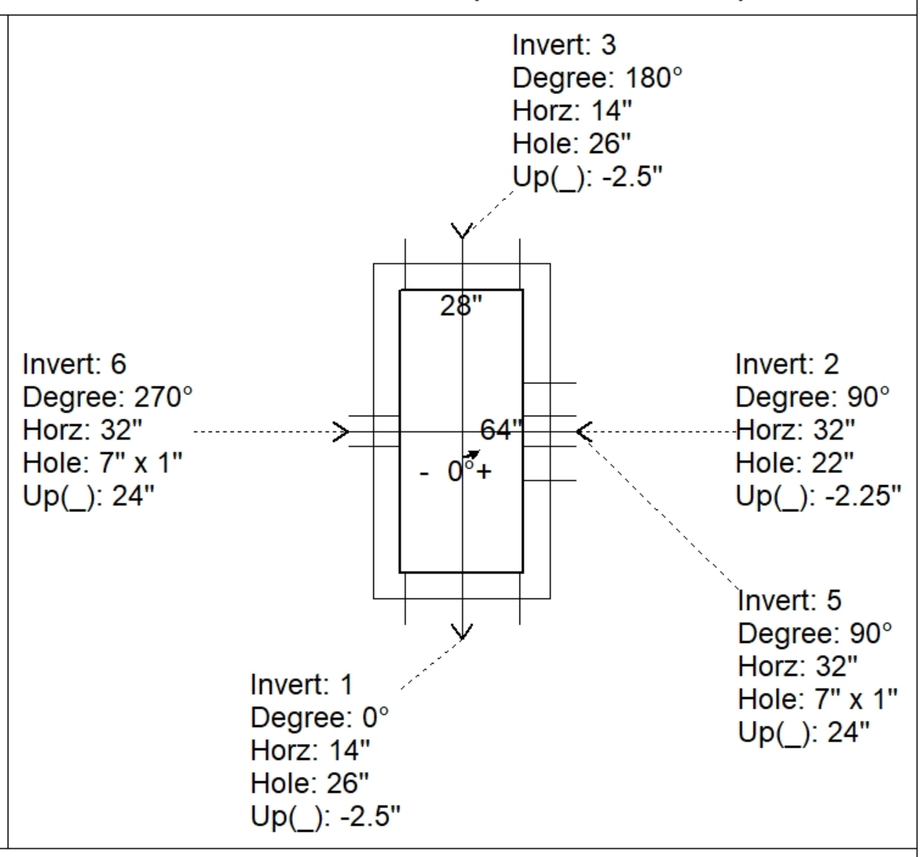

INSIDE WALL DIMENSIONS

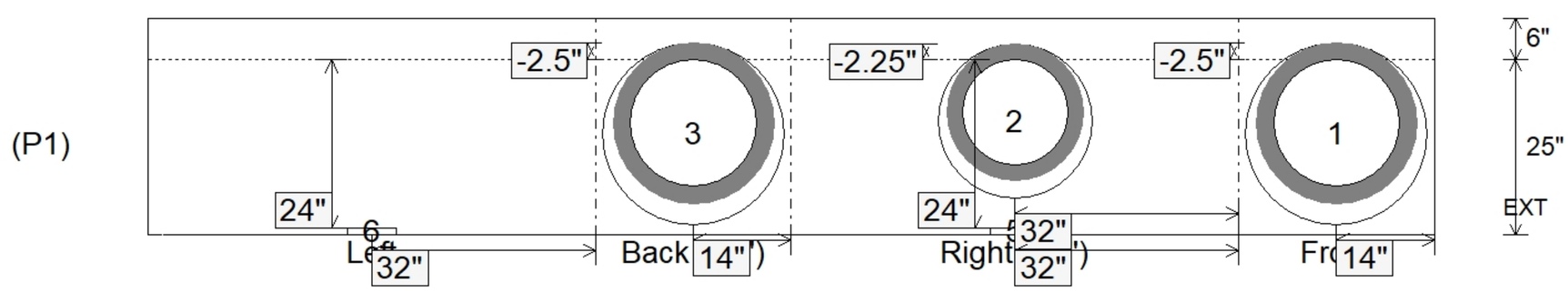

Coating (Int): Coating (Ext):	Seam Up: Flat Seam Dn: n/a	Wall Thickness: 6" Floor Height: 6"	Height (Int): 25" Height (Ext): 31"	Weight (Net): 3416 lb Volume (Net): 0.87cu.yd

Job Name: 26-2030 - KYTC McCracken Co. Call 111 (ID 264505)
Job Location: Paducah, KY
Contractor: Jim Smith Contracting Co, LLC

Plant: 100
6/12/2026 7:50:16 AM

Tech: J. Horsley
PC: J. Jarvis

Structure ID: 151+22 LT S-2 CBIB

P2 BX2424-08R24 BOX RISER 8inW F/G

P5) 8" x 120" - CB INLET KY B 10' TOP F/G - 9"	1660 lb
P4) 24" x 120" - CB INLET KY B 10' BOTTOM RIGHT T/G - 17"	2650 lb
P3) 24" x 24" - FIELD ADJUSTMENT - 3"	0 lb
P2) 24" x 24" - BOX RISER 8inW F/G - 24"	2062 lb
P1) 24" x 24" - BOX BASE 8inW, 8inF, Variable Ht T/n - 44"	4684 lb
1) CASTING - HOE KY-345 SET (CBI B)	290 lb
2) 24" x 24" - Conseal CS-102 1.00"	0 lb
1) Hole - 18	0 lb
Structure Total:	11346 lb

Structure Notes: .
** KYTC STATE PROJECT **
1. PER KYTC CBI TYPE B / ASTM C913 SPEC'S.
2. CONCRETE = 4,000 PI AT 28 DAYS.
3. CASTING BT ICAST (HOE KY-345 F/G(CBI-B)
.
REINFORCING PER ASTM A615 (GRADE 60).
- TOP PHASE (As .62) #5 BARS AT 6" C.C.E.W.
- WALLS (As .31) #5 BARS AT 12" C.C.E.W.
- FLOOR (As .31) #5 BARS AT 12" C.C.E.W.

Rim: 374.92' Rim to Invert: 8.11' Slack: 0.32" Sump: 0" Step Position:

Position	Elev	Angle	Ext. (cw)	Pipe	Pipe OD	Connector	Hole	Horz Size	Up (_)	Offset
Invert 1										
Invert 2										
Invert 3										
Invert 4										
Invert 5										
Invert 6										
Invert 7										
Invert 8										

RIGHT-SIDE UP VIEW (int. dimensions)

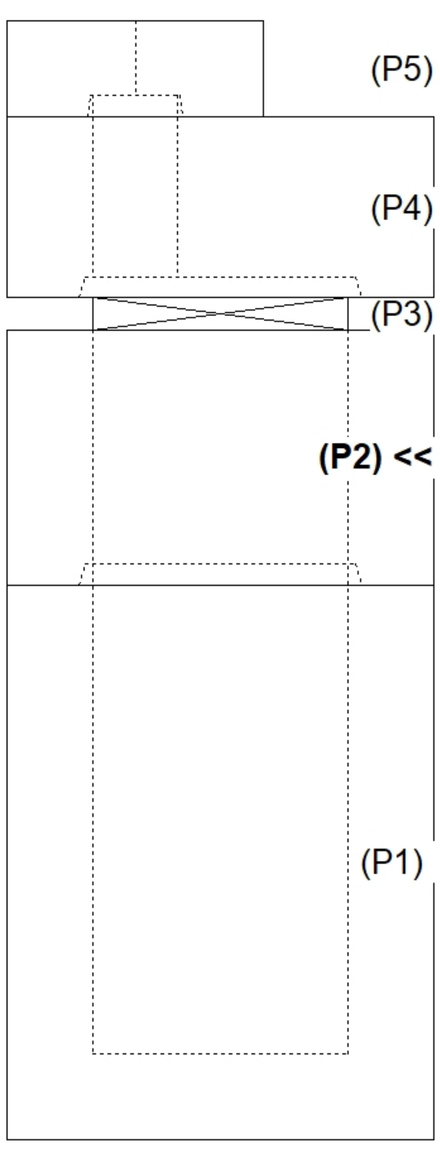

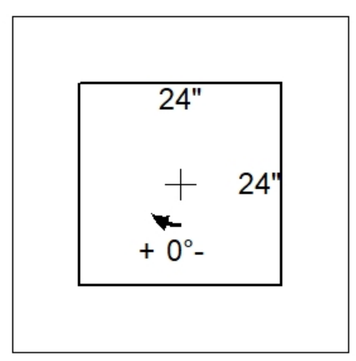

INSIDE WALL DIMENSIONS

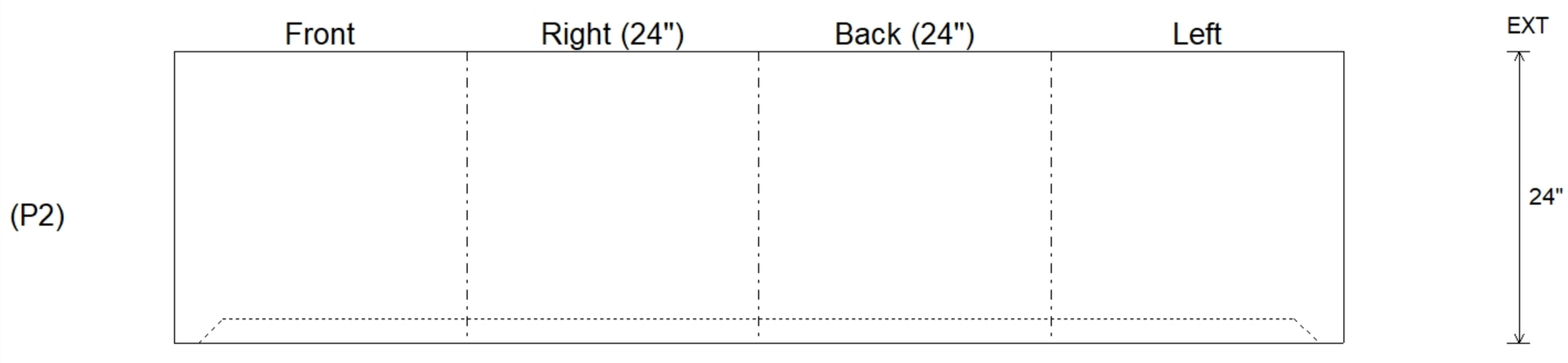

Coating (Int):	Seam Up: Flat	Wall Thickness: 8"	Height (Int): 24"	Weight (Net): 2062 lb
Coating (Ext):	Seam Dn: Groove	Floor Height: 0"	Height (Ext): 24"	Volume (Net): 0.53cu.yd

Job Name: 25-1401 Irwin Landing Ph. 1 Job Location: Murfreesboro, TN Contractor: Bear Construction LLC	Plant: Beaver Dam 6/9/2026 10:36:50 AM	Tech: S. Felletter PC: Erica Bradley	

Structure ID: R2B

P1 BX28640606-VH BOX BASE 6inW, 6inF, Variable Ht F/n

P2) 28" x 64" - CASTING HEIGHT - 5"	0 lb
P1) 28" x 64" - BOX BASE 6inW, 6inF, Variable Ht F/n - 44"	5864 lb
1) 28" x 64" - STORM INVERT CHANNEL (FLAT) - 4" THK	450 lb
1) CASTING - JBS 3104-V DOUBLE SET	250 lb
1) 28" x 64" - Conseal CS-102 1.00"	0 lb
1) Hole - 26	0 lb
2) LINTEL BAR SLOT n/n - 7"x1"	0 lb
Structure Total:	6564 lb

Structure Notes: .
1. PER ASTM C913 SPECIFICATIONS.
2. CONCRETE = 4,000 PSI AT 28 DAYS.
3. NO INVERT CHANNEL.
4. CASTING BY ICAST (JBS 3104 DOUBLE SET).
5. 1" X 7" RECESSES FOR LINTEL BAR.

.
REINFORCING PER ASTM A615 (GRADE 60).
- WALLS (As .12) #5 BARS AT 12" C.C.E.W.
- FLOOR (As .12) #5 BARS AT 12" C.C.E.W.

Rim: 573.14' Rim to Invert: 3.95' Slack: 0.9" Sump: 2.5" Step Position:

Position	Elev	Angle	Ext. (cw)	Pipe	Pipe OD	Connector	Hole	Horz Size	Up (_)	Offset
Invert 1	569.19'	90°	38"	18" RCP B WALL	23"	Hole 26	26"	26"	0"	0"
Invert 2	572.55'	90°	38"	7" x 1" LINTEL BAR SLOT	7" x 1"	LINTEL BAR SLOT 7"x1"	7" x 1"	7"	42.82"	0"
Invert 3	572.55'	270°	38"	7" x 1" LINTEL BAR SLOT	7" x 1"	LINTEL BAR SLOT 7"x1"	7" x 1"	7"	42.82"	0"
Invert 4										
Invert 5										
Invert 6										
Invert 7										
Invert 8										

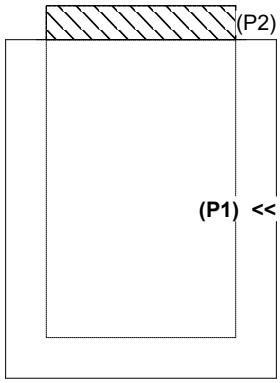

RIGHT-SIDE UP VIEW (int. dimensions)

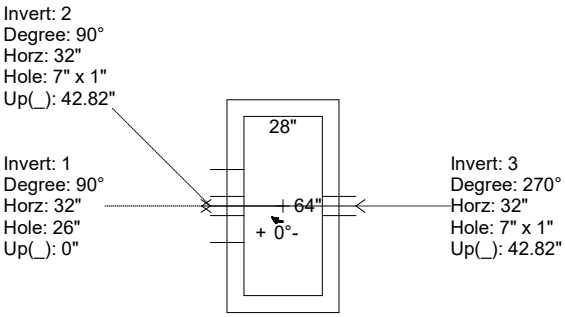

UPSIDE-DOWN VIEW (int. dimenions)

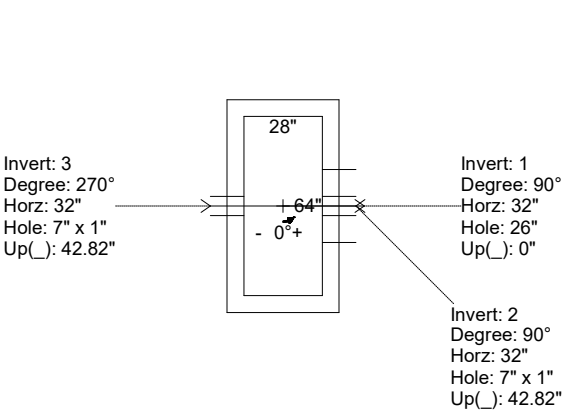

INSIDE WALL DIMENSIONS

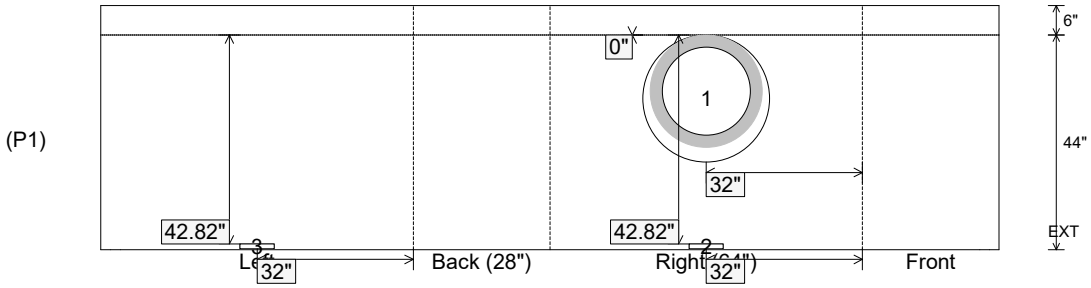

Coating (Int): Coating (Ext):	Seam Up: Flat Seam Dn: n/a	Wall Thickness: 6" Floor Height: 6"	Height (Int): 44" Height (Ext): 50"	Weight (Net): 5864 lb Volume (Net): 1.5cu.yd

Job Name: 25-1401 Irwin Landing Ph. 1 Job Location: Murfreesboro, TN Contractor: Bear Construction LLC	Plant: Beaver Dam 6/9/2026 10:36:50 AM	Tech: S. Felletter PC: Erica Bradley	

Structure ID: R2B

P1 BX28640606-VH **BOX BASE 6inW, 6inF, Variable Ht F/n**

P2) 28" x 64" - CASTING HEIGHT - 5"	0 lb
P1) 28" x 64" - BOX BASE 6inW, 6inF, Variable Ht F/n - 44"	5864 lb
1) 28" x 64" - STORM INVERT CHANNEL (FLAT) - 4" THK	450 lb
1) CASTING - JBS 3104-V DOUBLE SET	250 lb
1) 28" x 64" - Conseal CS-102 1.00"	0 lb
1) Hole - 26	0 lb
2) LINTEL BAR SLOT n/n - 7"x1"	0 lb
Structure Total:	6564 lb

Invert channel drawing
4" Thick flat storm invert

Structure Notes: .
1. PER ASTM C913 SPECIFICATIONS.
2. CONCRETE = 4,000 PSI AT 28 DAYS.
3. NO INVERT CHANNEL.
4. CASTING BY ICAST (JBS 3104 DOUBLE SET).
5. 1" X 7" RECESSES FOR LINTEL BAR.

.
REINFORCING PER ASTM A615 (GRADE 60).
- WALLS (As .12) #5 BARS AT 12" C.C.E.W.
- FLOOR (As .12) #5 BARS AT 12" C.C.E.W.

Rim: 573.14' Rim to Invert: 3.95' Slack: 0.9" Sump: 2.5" Step Position:

Position	Elev	Angle	Ext. (cw)	Pipe	Pipe OD	Connector	Hole	Horz Size	Up (_)	Offset
Invert 1	569.19'	90°	38"	18" RCP B WALL	23"	Hole 26	26"	26"	0"	0"
Invert 2	572.55'	90°	38"	7" x 1" LINTEL BAR SLOT	7" x 1"	LINTEL BAR SLOT 7"x1"	7" x 1"	7"	42.82"	0"
Invert 3	572.55'	270°	38"	7" x 1" LINTEL BAR SLOT	7" x 1"	LINTEL BAR SLOT 7"x1"	7" x 1"	7"	42.82"	0"
Invert 4										
Invert 5										
Invert 6										
Invert 7										
Invert 8										

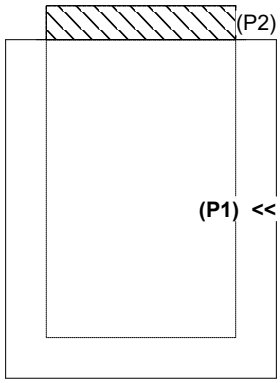

RIGHT-SIDE UP VIEW (int. dimensions)

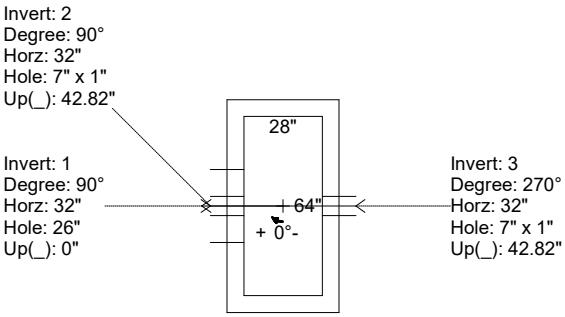

UPSIDE-DOWN VIEW (int. dimenions)

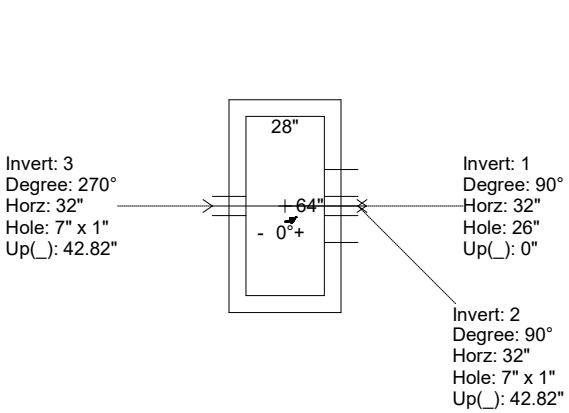

INSIDE WALL DIMENSIONS

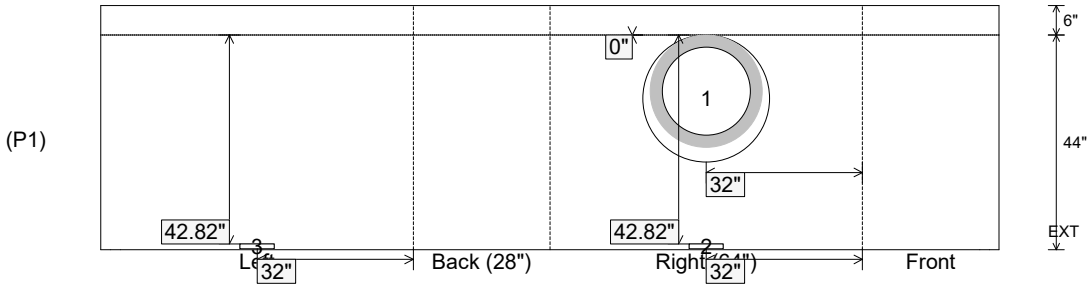

Coating (Int): Coating (Ext):	Seam Up: Flat Seam Dn: n/a	Wall Thickness: 6" Floor Height: 6"	Height (Int): 44" Height (Ext): 50"	Weight (Net): 5864 lb Volume (Net): 1.5cu.yd

Job Name: 25-2952 - KYTC Jefferson Co Call 106 (251315) Job Location: Indiana, KY Contractor: Louisville Paving and Construction	Plant: 100 6/12/2026 3:09:26 PM	Tech: J. Horsley - A PC: J. Jarvis	

Structure ID: 52

P1 BX24300808VF BOX BASE 8inW, 8inF, Variable Ht F/n

P3) 15" x 27" - P.I.P. - BY OTHERS - 8"	0 lb
P2) 24" x 30" - CB FLAT TOP 8"W w/15"x27" HOLE F/F - 8"	963 lb
P1) 24" x 30" - BOX BASE 8inW, 8inF, Variable Ht F/n - 44"	5143 lb
1) 24" x 30" - Conseal CS-102 1.00"	0 lb
1) 15" x 27" - Conseal CS-102 1.00"	0 lb
1) Hole - 20	0 lb
2) Hole - 4	0 lb
Structure Total:	6106 lb

Structure Notes:

** KYTC STATE PROJECT **

1. PER KYTC DBI TYPE 13G / ASTM C-913 SPECS
2. CONCRETE: 4,000 PSI AT 28 DAYS
3. REINFORCEMENT: #5 BAR @ 12" C.C. E.W. (GRADE 60) - 2" MIN. REBAR CLEARANCE (TYP)
4. HOE KY-230G FRAME & GRATE SUPPLIED BY OTHERS - POURED IN PLACE BY OTHERS

Rim: 552.26' Rim to Invert: 5' Slack: 0" Sump: 0" Step Position:

Position	Elev	Angle	Ext. (cw)	Pipe	Pipe OD	Connector	Hole	Horz Size	Up (_)	Offset
Invert 1	547.26'	0°	20"	15" HDPE	17.6"	Hole 20	20"	20"	-2.5"	0"
Invert 2	550.26'	90°	23"	4" WEEP HOLE	4"	Hole 4	4"	4"	36"	0"
Invert 3	550.26'	270°	23"	4" WEEP HOLE	4"	Hole 4	4"	4"	36"	0"
Invert 4										
Invert 5										
Invert 6										
Invert 7										
Invert 8										

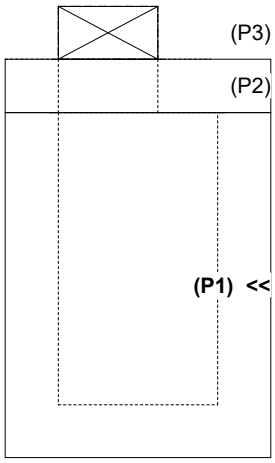

RIGHT-SIDE UP VIEW (int. dimensions)

UPSIDE-DOWN VIEW (int. dimenions)

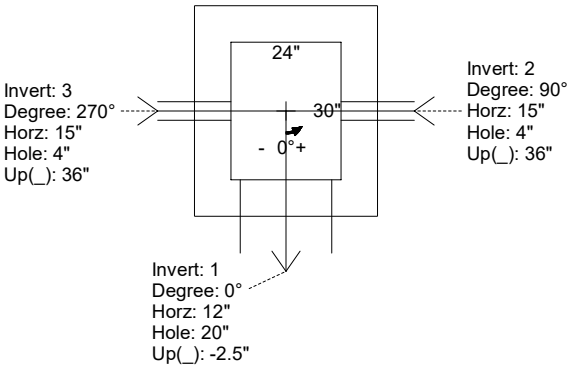

INSIDE WALL DIMENSIONS

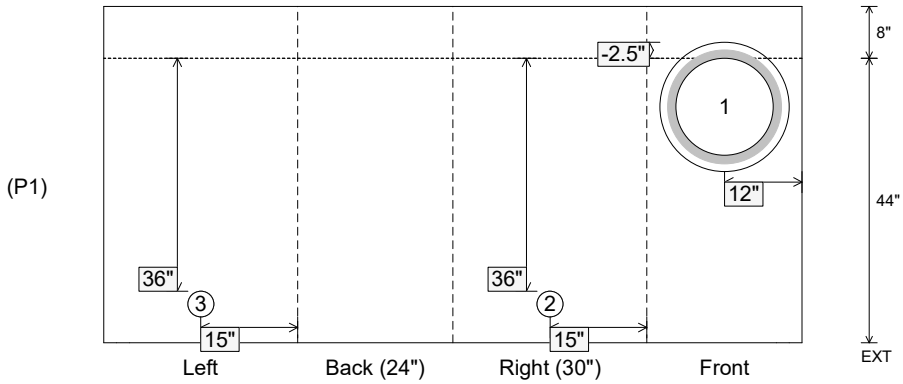

Coating (Int): Coating (Ext):	Seam Up: Flat Seam Dn: n/a	Wall Thickness: 8" Floor Height: 8"	Height (Int): 44" Height (Ext): 52"	Weight (Net): 5143 lb Volume (Net): 1.31cu.yd

Job Name: 25-2952 - KYTC Jefferson Co Call 106 (251315) Job Location: Indiana, KY Contractor: Louisville Paving and Construction	Plant: 100 6/17/2026 5:40:45 PM	Tech: J. Horsley - A PC: J. Jarvis	

Structure ID: 9

P1 BX3636-08BA30 BOX BASE 8inW, 8inF F/n

P2) 36" x 36" - CASTING HEIGHT - 3"	0 lb
P1) 36" x 36" - BOX BASE 8inW, 8inF F/n - 30"	4752 lb
1) 36" x 36" - Conseal CS-102 1.00"	0 lb
2) Hole - 24	0 lb
Structure Total:	4752 lb

Structure Notes:
1. PER MSD CATCH BASIN TYPE 1 / ASTM C-913 SPECS
2. CONCRETE: 4,000 PSI AT 28 DAYS
3. REINFORCEMENT: #5 BAR @ 12" C.C. E.W. (GRADE 60) - 2" MIN. REBAR CLEARANCE (TYP)
4. HOE 595 FRAME & GRATES SUPPLIED BY OTHERS

Rim: 563.94' Rim to Invert: 2.75' Slack: 0" Sump: 0" Step Position:

Position	Elev	Angle	Ext. (cw)	Pipe	Pipe OD	Connector	Hole	Horz Size	Up (_)	Offset
Invert 1	561.19'	90°	26"	18" HDPE	21.2"	Hole 24	24"	24"	-3"	0"
Invert 2	561.19'	270°	26"	18" HDPE	21.2"	Hole 24	24"	24"	-3"	0"
Invert 3										
Invert 4										
Invert 5										
Invert 6										
Invert 7										
Invert 8										

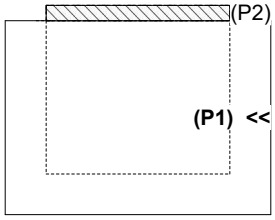

RIGHT-SIDE UP VIEW (int. dimensions)

UPSIDE-DOWN VIEW (int. dimenions)

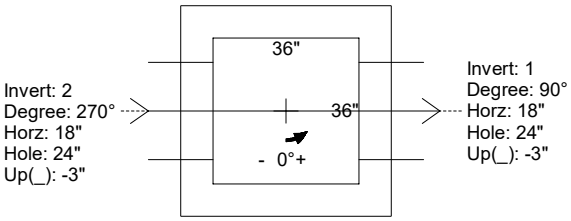

INSIDE WALL DIMENSIONS

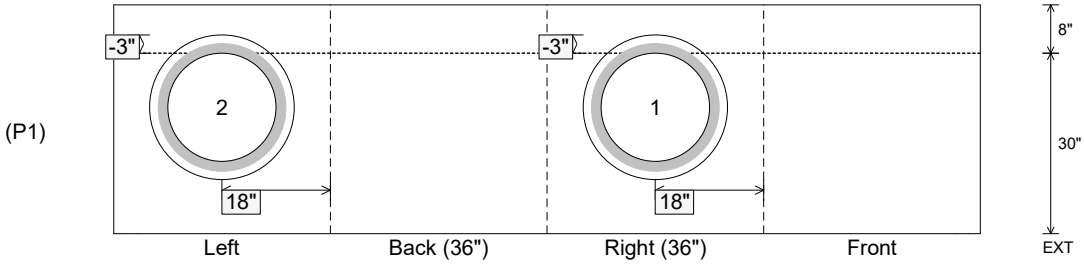

Coating (Int): Coating (Ext):	Seam Up: Flat Seam Dn: n/a	Wall Thickness: 8" Floor Height: 8"	Height (Int): 30" Height (Ext): 38"	Weight (Net): 4752 lb Volume (Net): 1.21cu.yd

Job Name: 25-2952 - KYTC Jefferson Co Call 106 (251315) Job Location: Indiana, KY Contractor: Louisville Paving and Construction	Plant: 100 6/17/2026 5:40:43 PM	Tech: J. Horsley - A PC: J. Jarvis	

Structure ID: 10

P1 BX3636-08BAVF BOX BASE 8inW, 8inF, Variable Ht F/n

P2) 36" x 36" - CASTING HEIGHT - 3"	0 lb
P1) 36" x 36" - BOX BASE 8inW, 8inF, Variable Ht F/n - 27"	4701 lb
1) 36" x 36" - Conseal CS-102 1.00"	0 lb
1) Hole - 24	0 lb
Structure Total:	4701 lb

Structure Notes:

1. PER MSD CATCH BASIN TYPE 1 / ASTM C-913 SPECS
2. CONCRETE: 4,000 PSI AT 28 DAYS
3. REINFORCEMENT: #5 BAR @ 12" C.C. E.W. (GRADE 60) - 2" MIN. REBAR CLEARANCE (TYP)
4. HOE 595 FRAME & GRATES SUPPLIED BY OTHERS

Rim: 562.7' Rim to Invert: 2.5' Slack: 0" Sump: 0" Step Position:

Position	Elev	Angle	Ext. (cw)	Pipe	Pipe OD	Connector	Hole	Horz Size	Up (_)	Offset
Invert 1	560.2'	0°	26"	18" HDPE	21.2"	Hole 24	24"	24"	-3"	0"
Invert 2										
Invert 3										
Invert 4										
Invert 5										
Invert 6										
Invert 7										
Invert 8										

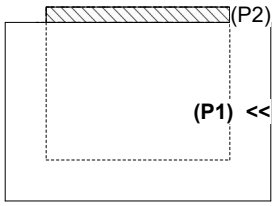

RIGHT-SIDE UP VIEW (int. dimensions)

UPSIDE-DOWN VIEW (int. dimenions)

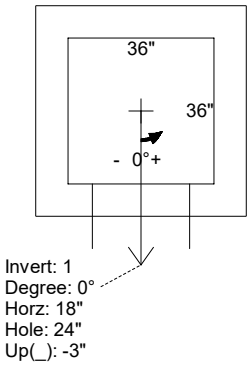

INSIDE WALL DIMENSIONS

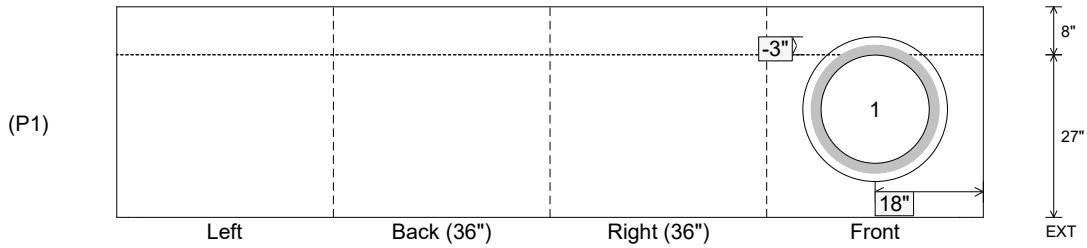

Coating (Int): Coating (Ext):	Seam Up: Flat Seam Dn: n/a	Wall Thickness: 8" Floor Height: 8"	Height (Int): 27" Height (Ext): 35"	Weight (Net): 4701 lb Volume (Net): 1.2cu.yd

Job Name: 25-3575 - Berry Global North Parking Lot Consolidation Job Location: Evansville, IN 47710 Contractor: Deig Bros Lumber & Construction Co, Inc.	Plant: 100 6/16/2026 8:47:28 PM	Tech: Jared - F PC: A. Chambers	

Structure ID: CI105

P1 BX2436-08BVF BOX BASE 8inW, 8inF, Variable Ht T/n

P3) 24" x 36" - CASTING HEIGHT - 6"	0 lb
P2) 24" x 36" - BOX RISER 8inW F/G - 36"	3418 lb
P1) 24" x 36" - BOX BASE 8inW, 8inF, Variable Ht T/n - 33"	4764 lb
1) CASTING - HOE 525 SET FLAT GRATE (F/G/H)	442 lb
1) CASTING - BMP SNOUT 18F w/ KIT	25 lb
2) 24" x 36" - Conseal CS-102 1.00"	0 lb
1) Hole - 22	0 lb
Structure Total:	8649 lb

Structure Notes: .
1. PER ASTM C913 SPECIFICATIONS.
2. CONCRETE = 4,000 PSI AT 28 DAYS.
3. NO STEPS AND NO INVERT CHANNEL.
4. CASTING BY ICAST (HOE 525 SET FLAT GRATE (F/G/H)).
5. 18F SNOUT SUPPLIED BY ICAST.
.
REINFORCING PER ASTM A615 (GRADE 60).
- TOP SLAB (As .62) #5 BARS AT 6" C.C.E.W.
- WALLS (As .12) #5 BARS AT 12" C.C.E.W.
- FLOOR (As .12) #5 BARS AT 12" C.C.E.W.

Rim: 385.29' Rim to Invert: 2.76' Slack: 0.12" Sump: 42" Step Position:

Position	Elev	Angle	Ext. (cw)	Pipe	Pipe OD	Connector	Hole	Horz Size	Up (_)	Offset
Invert 1										
Invert 2										
Invert 3										
Invert 4										
Invert 5										
Invert 6										
Invert 7										
Invert 8										

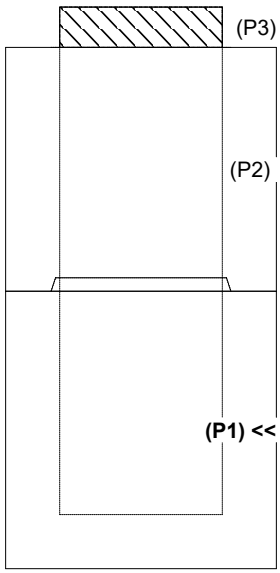

RIGHT-SIDE UP VIEW (int. dimensions)

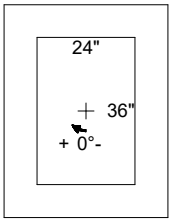

UPSIDE-DOWN VIEW (int. dimenions)

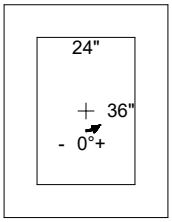

INSIDE WALL DIMENSIONS

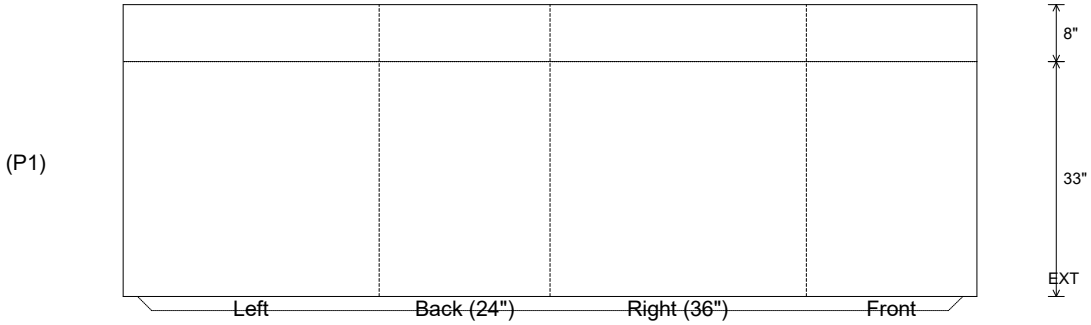

Coating (Int): Coating (Ext):	Seam Up: Tongue Seam Dn: n/a	Wall Thickness: 8" Floor Height: 8"	Height (Int): 33" Height (Ext): 41"	Weight (Net): 4764 lb Volume (Net): 1.22cu.yd

Job Name: 25-3575 - Berry Global North Parking Lot Consolidation Job Location: Evansville, IN 47710 Contractor: Deig Bros Lumber & Construction Co, Inc.	Plant: 100 6/16/2026 8:48:01 PM	Tech: Jared - F PC: A. Chambers	

Structure ID: CI105

P2 BX2436-08R-VH BOX RISER 8inW F/G

P3) 24" x 36" - CASTING HEIGHT - 6"	0 lb
P2) 24" x 36" - BOX RISER 8inW F/G - 36"	3418 lb
P1) 24" x 36" - BOX BASE 8inW, 8inF, Variable Ht T/n - 33"	4764 lb
1) CASTING - HOE 525 SET FLAT GRATE (F/G/H)	442 lb
1) CASTING - BMP SNOUT 18F w/ KIT	25 lb
2) 24" x 36" - Conseal CS-102 1.00"	0 lb
1) Hole - 22	0 lb
Structure Total:	8649 lb

Structure Notes: .
1. PER ASTM C913 SPECIFICATIONS.
2. CONCRETE = 4,000 PSI AT 28 DAYS.
3. NO STEPS AND NO INVERT CHANNEL.
4. CASTING BY ICAST (HOE 525 SET FLAT GRATE (F/G/H)).
5. 18F SNOUT SUPPLIED BY ICAST.
.
REINFORCING PER ASTM A615 (GRADE 60).
- TOP SLAB (As .62) #5 BARS AT 6" C.C.E.W.
- WALLS (As .12) #5 BARS AT 12" C.C.E.W.
- FLOOR (As .12) #5 BARS AT 12" C.C.E.W.

Rim: 385.29' Rim to Invert: 2.76' Slack: 0.12" Sump: 42" Step Position:

Position	Elev	Angle	Ext. (cw)	Pipe	Pipe OD	Connector	Hole	Horz Size	Up (_)	Offset
Invert 1	382.53'	0°	20"	15" RCP B WALL	19.5"	Hole 22	22"	22"	4.75"	0"
Invert 2										
Invert 3										
Invert 4										
Invert 5										
Invert 6										
Invert 7										
Invert 8										

RIGHT-SIDE UP VIEW (int. dimensions)

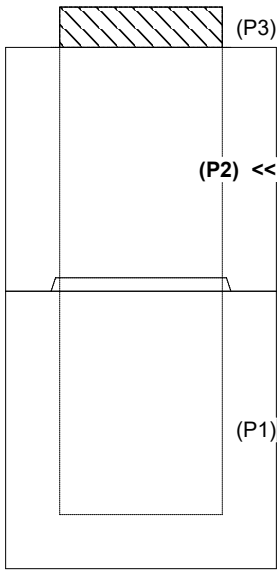

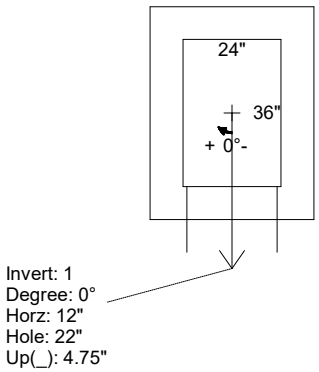

INSIDE WALL DIMENSIONS

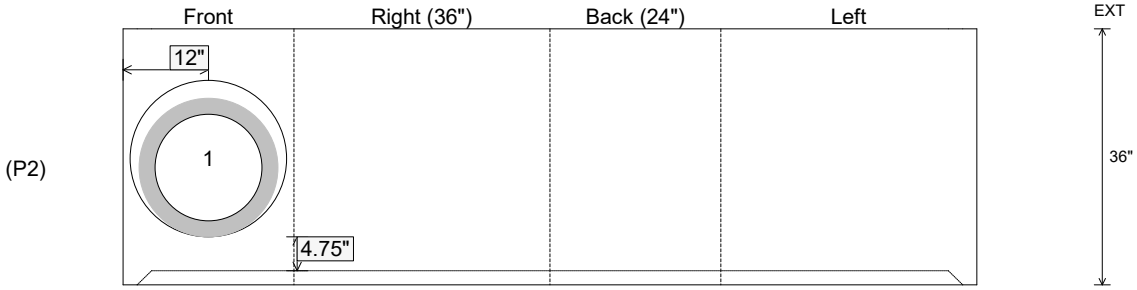

Coating (Int): Coating (Ext):	Seam Up: Flat Seam Dn: Groove	Wall Thickness: 8" Floor Height: 0"	Height (Int): 36" Height (Ext): 36"	Weight (Net): 3418 lb Volume (Net): 0.87cu.yd

Job Name: 26-2030 - KYTC McCracken Co. Call 111 (ID 264505)
Job Location: Paducah, KY
Contractor: Jim Smith Contracting Co, LLC

Plant: 100
6/12/2026 7:49:36 AM

Tech: J. Horsley
PC: J. Jarvis

Structure ID: 146+33 RT S-12 CBIB

P1 BX2424-08BAVF BOX BASE 8inW, 8inF, Variable Ht F/n

P4) 8" x 120" - CB INLET KY B 10' TOP F/G - 9"	1660 lb
P3) 24" x 120" - CB INLET KY B 10' BOTTOM LEFT T/G - 17"	2650 lb
P2) 24" x 24" - FIELD ADJUSTMENT - 3"	0 lb
P1) 24" x 24" - BOX BASE 8inW, 8inF, Variable Ht F/n - 34"	3825 lb
1) CASTING - HOE KY-345 SET (CBI B)	290 lb
1) 24" x 24" - Conseal CS-102 1.00"	0 lb
1) Hole - 18	0 lb
Structure Total:	8425 lb

Structure Notes: .
** KYTC STATE PROJECT **
1. PER KYTC CBI TYPE B / ASTM C913 SPEC'S.
2. CONCRETE = 4,000 PI AT 28 DAYS.
3. CASTING BT ICAST (HOE KY-345 F/G(CBI-B)
.
REINFORCING PER ASTM A615 (GRADE 60).
- TOP PHASE (As .62) #5 BARS AT 6" C.C.E.W.
- WALLS (As .31) #5 BARS AT 12" C.C.E.W.
- FLOOR (As .31) #5 BARS AT 12" C.C.E.W.

Rim: 372.88' Rim to Invert: 5.32' Slack: 0.84" Sump: 0" Step Position:

Position	Elev	Angle	Ext. (cw)	Pipe	Pipe OD	Connector	Hole	Horz Size	Up (_)	Offset
Invert 1	367.56'	180°	20"	15" CMP	16"	Hole 18	18"	18"	-1.5"	0"
Invert 2										
Invert 3										
Invert 4										
Invert 5										
Invert 6										
Invert 7										
Invert 8										

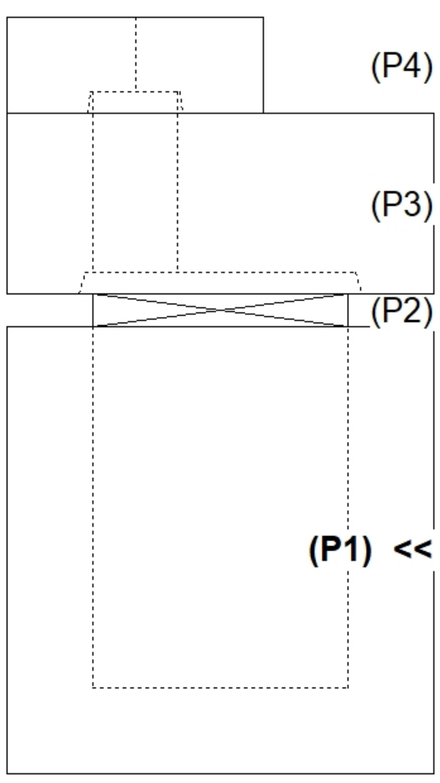

RIGHT-SIDE UP VIEW (int. dimensions)

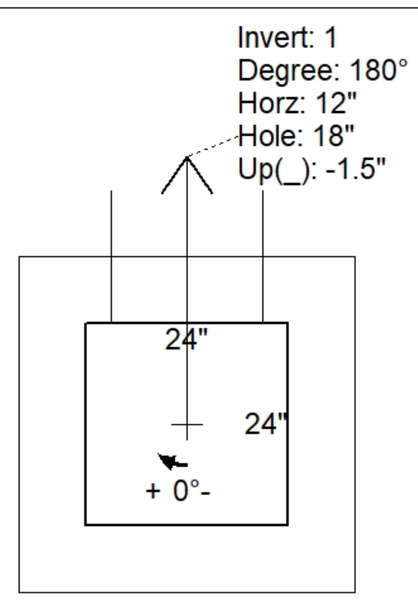

UPSIDE-DOWN VIEW (int. dimenions)

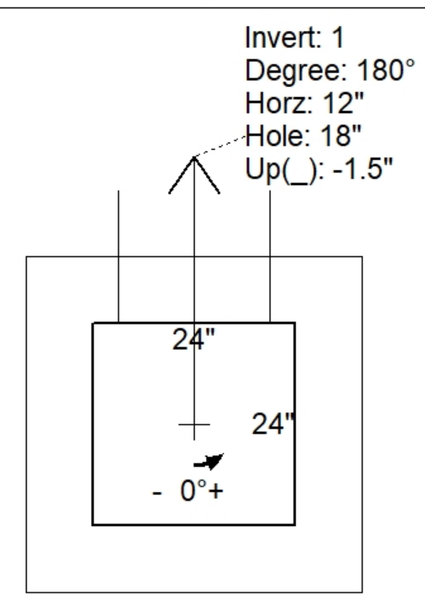

INSIDE WALL DIMENSIONS

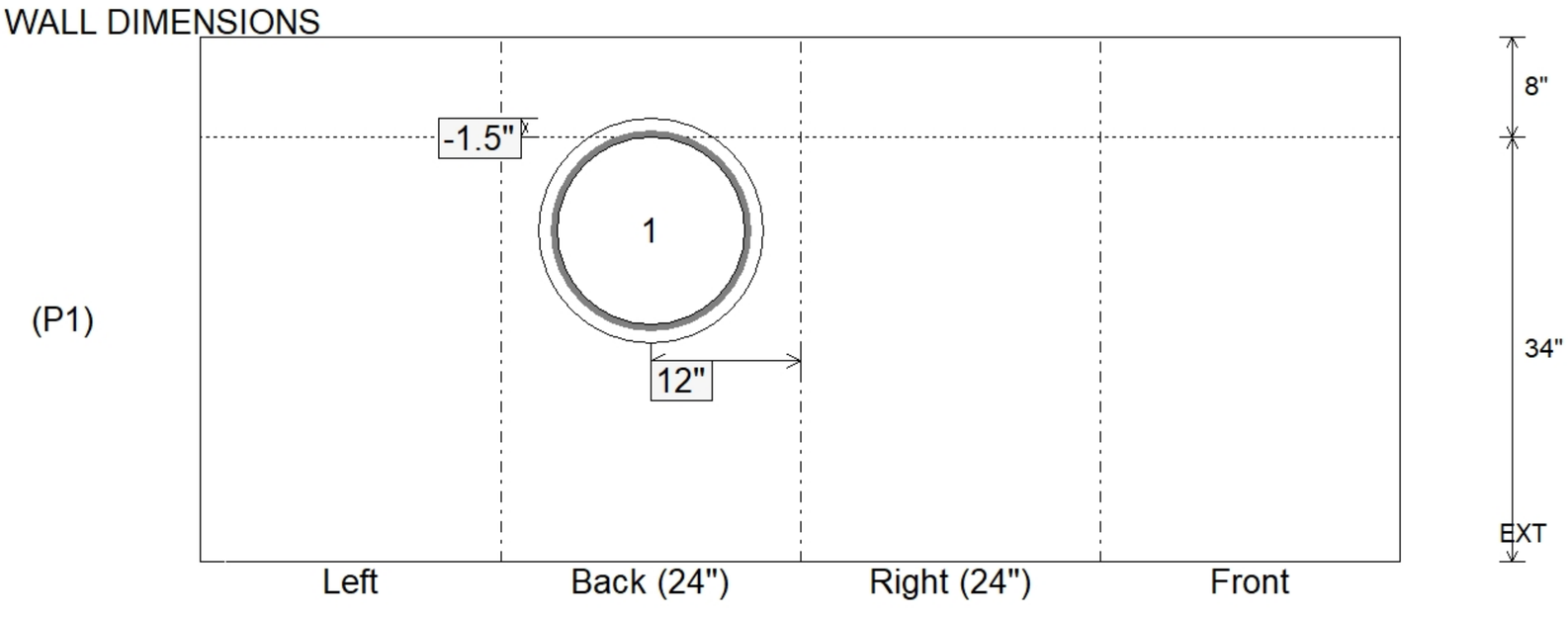

Coating (Int): Coating (Ext):	Seam Up: Flat Seam Dn: n/a	Wall Thickness: 8" Floor Height: 8"	Height (Int): 34" Height (Ext): 42"	Weight (Net): 3825 lb Volume (Net): 0.98cu.yd

Job Name: 26-2030 - KYTC McCracken Co. Call 111 (ID 264505)
Job Location: Paducah, KY
Contractor: Jim Smith Contracting Co, LLC

Plant: 100
6/12/2026 7:49:45 AM

Tech: J. Horsley
PC: J. Jarvis

Structure ID: 162+02 LT S-16 CBIA

P1 BX2436-08BA30 BOX BASE 8inW, 8inF F/n

P4) 24" x 120" - CB INLET KY A 10' TOP LEFT F/G - 10"	3400 lb
P3) 24" x 120" - CB INLET KY A 10' BOTTOM LEFT T/G - 18"	5270 lb
P2) 24" x 36" - FIELD ADJUSTMENT - 1"	0 lb
P1) 24" x 36" - BOX BASE 8inW, 8inF F/n - 30"	3947 lb
1) CASTING - HOE KY-206 F/C (KY CBI A)	206 lb
1) 24" x 36" - Conseal CS-102 1.00"	0 lb
2) Hole - 22	0 lb
Structure Total:	12823 lb

Structure Notes: .
** KYTC STATE PROJECT **
1. PER KYTC CBI TYPE A / ASTM C913 SPEC'S.
2. CONCRETE = 4,000 PI AT 28 DAYS.
3. HOE-KY-206 F/C CAST INTO TOP SLAB.
.
REINFORCING PER ASTM A615 (GRADE 60).
- TOP PHASE (As .62) #5 BARS AT 6" C.C.E.W.
- WALLS (As .31) #5 BARS AT 12" C.C.E.W.
- FLOOR (As .31) #5 BARS AT 12" C.C.E.W.

Rim: 386.61' Rim to Invert: 4.92' Slack: 0.04" Sump: 0" Step Position:

Position	Elev	Angle	Ext. (cw)	Pipe	Pipe OD	Connector	Hole	Horz Size	Up (_)	Offset
Invert 1	381.69'	180°	20"	18" CMP	19"	Hole 22	22"	22"	-2"	0"
Invert 2	381.69'	270°	26"	18" CMP	19"	Hole 22	22"	22"	-2"	0"
Invert 3										
Invert 4										
Invert 5										
Invert 6										
Invert 7										
Invert 8										

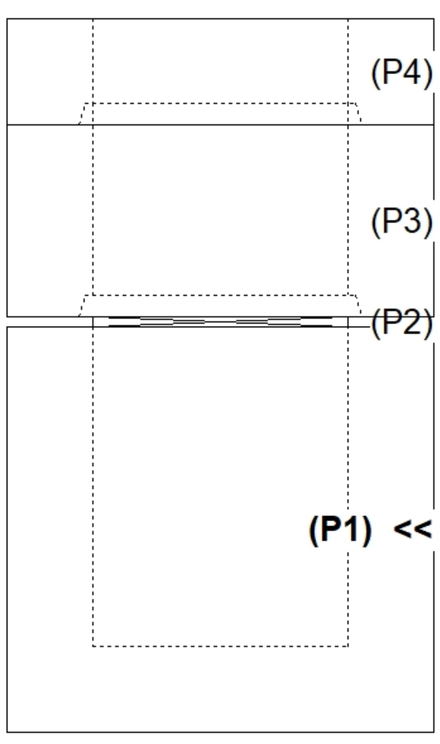

RIGHT-SIDE UP VIEW (int. dimensions)

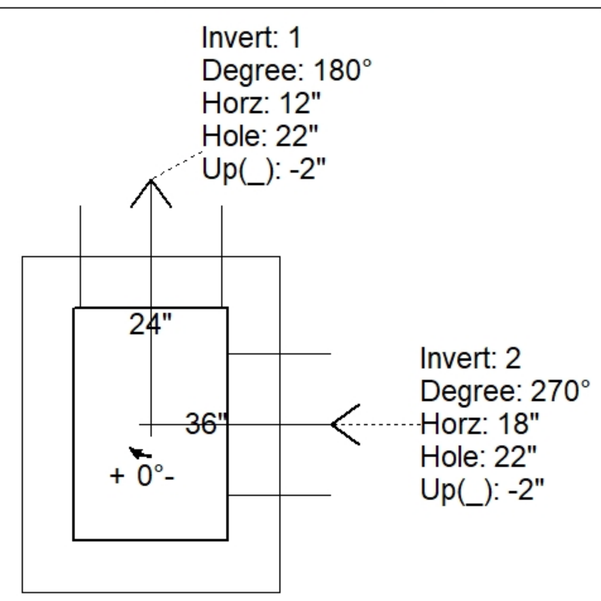

UPSIDE-DOWN VIEW (int. dimenions)

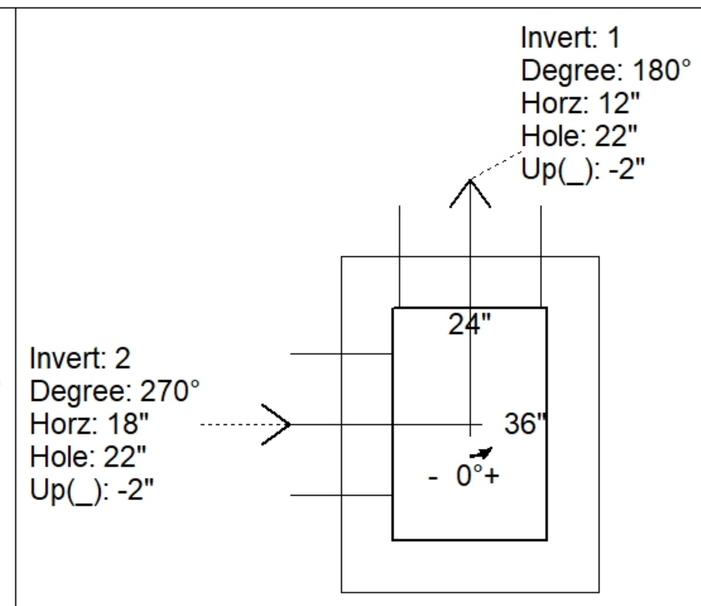

INSIDE WALL DIMENSIONS

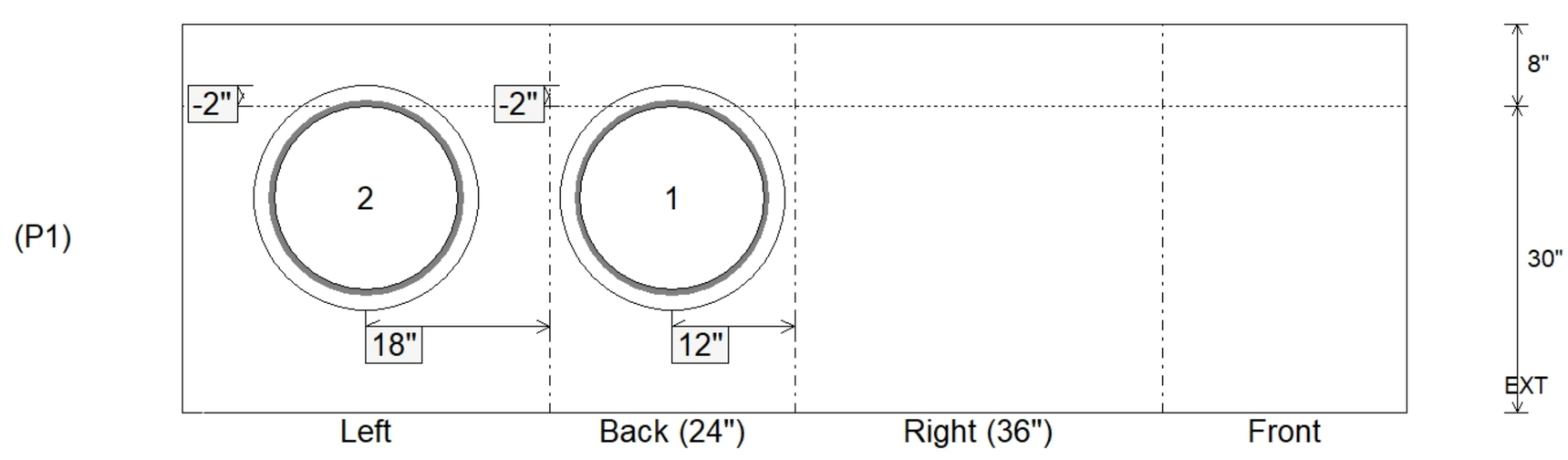

Coating (Int): Coating (Ext):	Seam Up: Flat Seam Dn: n/a	Wall Thickness: 8" Floor Height: 8"	Height (Int): 30" Height (Ext): 38"	Weight (Net): 3947 lb Volume (Net): 1.01cu.yd

Job Name: 25-1401 Irwin Landing Ph. 1 Job Location: Murfreesboro, TN Contractor: Bear Construction LLC	Plant: Beaver Dam 6/9/2026 10:37:02 AM	Tech: S. Felletter PC: Erica Bradley	

Structure ID: R15

P1 MH048BA30 MH BASE T/n

P4) 28" x 28" - CASTING HEIGHT - 5"	0 lb
P3) 48" - MH FLAT TOP w/28"x28" Hole F/G - 12"	1368 lb
P2) 48" - MH RISER SPECIAL T/G - 48"	3120 lb
P1) 48" - MH BASE T/n - 30"	2960 lb
1) 48" - STORM INVERT CHANNEL - 1/4 HEIGHT	1075 lb
1) CASTING - JBS 3104-V SINGLE SET	250 lb
2) 48" - Conseal CS-102 1.00"	0 lb
1) 28" x 28" - Conseal CS-102 1.00"	0 lb
3) Hole - 26	0 lb
6) MH Step ML-10-TDS-NCR - 10"	0 lb
Structure Total:	8773 lb

Structure Notes: .
1. PER ASTM C478 SPECIFICATIONS.
2. CONCRETE = 4,000 PSI AT 28 DAYS.
3. CASTING BY ICAST (JBS-3104 SINGLE SET).
.
REINFORCING PER ASTM A615 (GRADE 60).
- TOP SLAB (As .62) #5 BARS AT 6" C.C.E.W..
- RISER/WALLS (As .12)
- FLOOR (As .31) #5 BARS AT 12" C.C.E.W.

Rim: 576.81' Rim to Invert: 7.74' Slack: 0.38" Sump: 2.5" Step Position: 270°

Position	Elev	Angle	Ext. (cw)	Pipe	Pipe OD	Connector	Hole	Horz Size	Up (_)	Offset
Invert 1	569.07'	0°	0"	18" RCP B WALL	23"	Hole 26	26"	27.476"	0"	0"
Invert 2										
Invert 3	569.07'	180°	91.106"	18" RCP B WALL	23"	Hole 26	26"	27.476"	0"	0"
Invert 4										
Invert 5										
Invert 6										
Invert 7										
Invert 8										

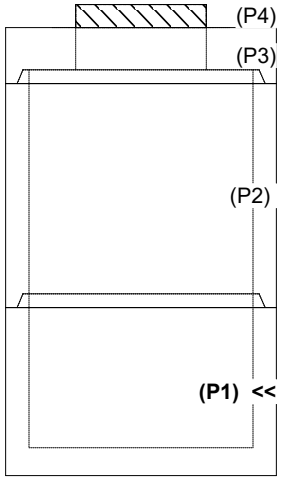

RIGHT-SIDE UP VIEW (int. dimensions)

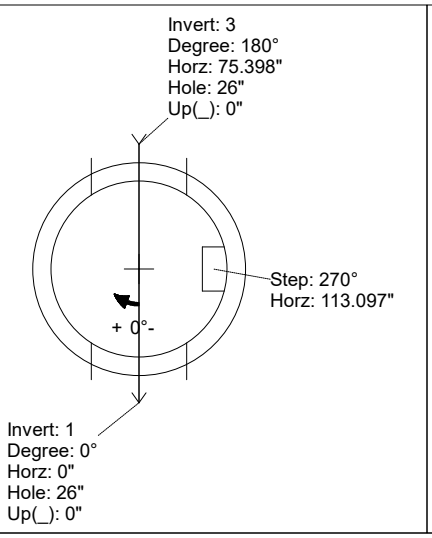

UPSIDE-DOWN VIEW (int. dimenions)

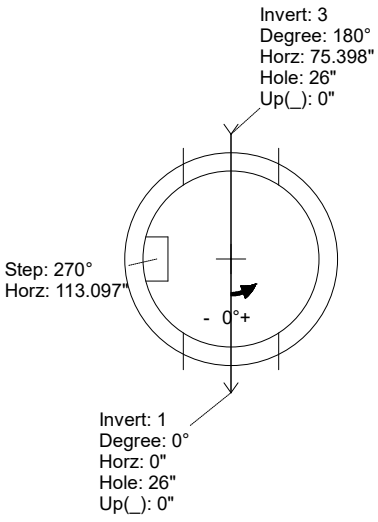

INSIDE WALL DIMENSIONS

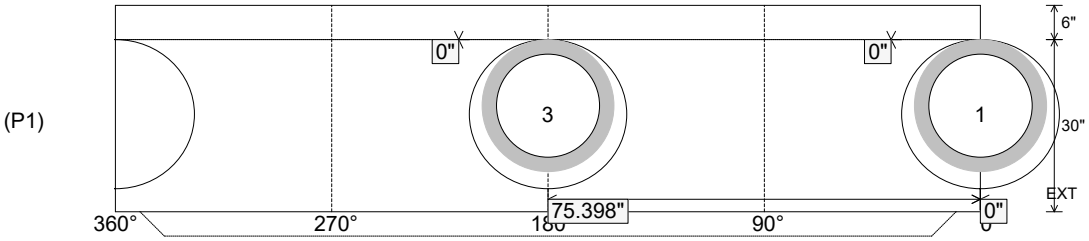

Coating (Int): Coating (Ext):	Seam Up: Tongue Seam Dn: n/a	Wall Thickness: 5" Floor Height: 6"	Height (Int): 30" Height (Ext): 36"	Weight (Net): 2960 lb Volume (Net): 0.76cu.yd

Job Name: 25-1401 Irwin Landing Ph. 1 Job Location: Murfreesboro, TN Contractor: Bear Construction LLC	Plant: Beaver Dam 6/9/2026 10:37:02 AM	Tech: S. Felletter PC: Erica Bradley	

Structure ID: R15

P1 MH048BA30 MH BASE T/n

P4) 28" x 28" - CASTING HEIGHT - 5"	0 lb
P3) 48" - MH FLAT TOP w/28"x28" Hole F/G - 12"	1368 lb
P2) 48" - MH RISER SPECIAL T/G - 48"	3120 lb
P1) 48" - MH BASE T/n - 30"	2960 lb
1) 48" - STORM INVERT CHANNEL - 1/4 HEIGHT	1075 lb
1) CASTING - JBS 3104-V SINGLE SET	250 lb
2) 48" - Conseal CS-102 1.00"	0 lb
1) 28" x 28" - Conseal CS-102 1.00"	0 lb
3) Hole - 26	0 lb
6) MH Step ML-10-TDS-NCR - 10"	0 lb
Structure Total:	8773 lb

Structure Notes: .
1. PER ASTM C478 SPECIFICATIONS.
2. CONCRETE = 4,000 PSI AT 28 DAYS.
3. CASTING BY ICAST (JBS-3104 SINGLE SET).
.
REINFORCING PER ASTM A615 (GRADE 60).
- TOP SLAB (As .62) #5 BARS AT 6" C.C.E.W..
- RISER/WALLS (As .12)
- FLOOR (As .31) #5 BARS AT 12" C.C.E.W.

Invert channel drawing
1/4 Height storm invert

Rim: 576.81' Rim to Invert: 7.74' Slack: 0.38" Sump: 2.5" Step Position: 270°

Position	Elev	Angle	Ext. (cw)	Pipe	Pipe OD	Connector	Hole	Horz Size	Up (_)	Offset
Invert 1	569.07'	0°	0"	18" RCP B WALL	23"	Hole 26	26"	27.476"	0"	0"
Invert 2										
Invert 3	569.07'	180°	91.106"	18" RCP B WALL	23"	Hole 26	26"	27.476"	0"	0"
Invert 4										
Invert 5										
Invert 6										
Invert 7										
Invert 8										

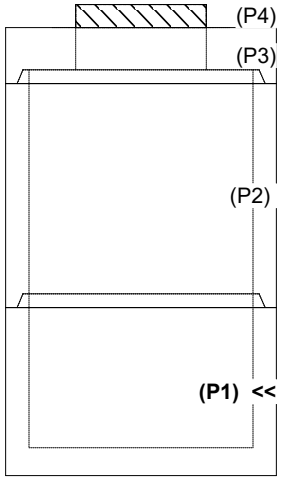

RIGHT-SIDE UP VIEW (int. dimensions)

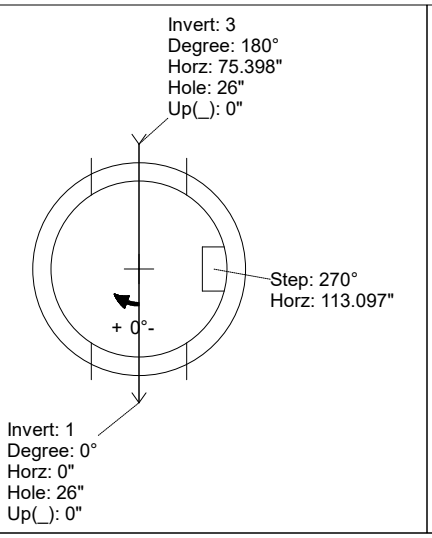

UPSIDE-DOWN VIEW (int. dimenions)

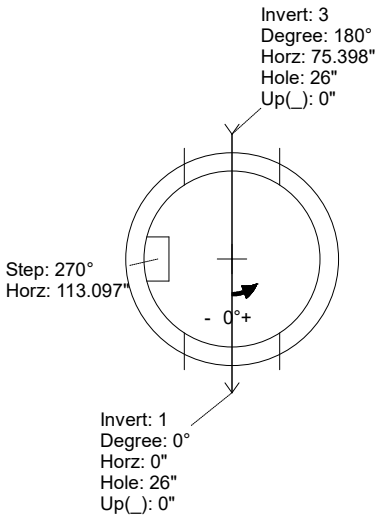

INSIDE WALL DIMENSIONS

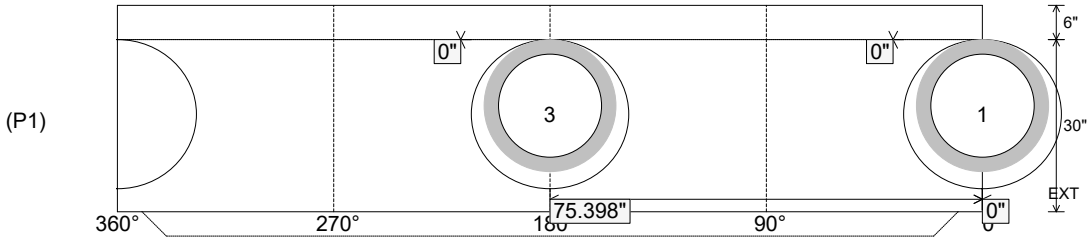

Coating (Int): Coating (Ext):	Seam Up: Tongue Seam Dn: n/a	Wall Thickness: 5" Floor Height: 6"	Height (Int): 30" Height (Ext): 36"	Weight (Net): 2960 lb Volume (Net): 0.76cu.yd

Job Name: 25-1401 Irwin Landing Ph. 1 Job Location: Murfreesboro, TN Contractor: Bear Construction LLC	Plant: Beaver Dam 6/9/2026 10:36:47 AM	Tech: S. Felletter PC: Erica Bradley	

Structure ID: R2

P1 MH060BA72 MH BASE F/n

P3) 28" x 28" - CASTING HEIGHT - 5"	0 lb
P2) 60" - MH FLAT TOP w/28"x28" Hole F/F - 8"	2217 lb
P1) 60" - MH BASE F/n - 72"	9218 lb
1) 60" - STORM INVERT CHANNEL - 1/4 HEIGHT	1700 lb
1) CASTING - JBS 3104-V SINGLE SET	250 lb
1) 60" - Conseal CS-102 1.00"	0 lb
1) 28" x 28" - Conseal CS-102 1.00"	0 lb
1) Hole - 34	0 lb
2) Hole - 26	0 lb
6) MH Step ML-10-TDS-NCR - 10"	0 lb
Structure Total:	13385 lb

Structure Notes: .
1. PER ASTM C478 SPECIFICATIONS.
2. CONCRETE = 4,000 PSI AT 28 DAYS.
3. CASTING BY ICAST (JBS-3104 SINGLE SET).
.
REINFORCING PER ASTM A615 (GRADE 60).
- TOP SLAB (As .62) #5 BARS AT 6" C.C.E.W..
- RISER/WALLS (As .18)
- FLOOR (As .37) #5 BARS AT 10" C.C.E.W.

Rim: 573.26' Rim to Invert: 6.94' Slack: 1.28" Sump: 3" Step Position: 198

Position	Elev	Angle	Ext. (cw)	Pipe	Pipe OD	Connector	Hole	Horz Size	Up (_)	Offset
Invert 1	566.32'	0°	0"	24" RCP B WALL	30"	Hole 34	34"	36.147"	0"	0"
Invert 2	569.47'	110°	69.115"	18" RCP B WALL	23"	Hole 26	26"	26.891"	38.3"	0"
Invert 3	566.82'	285°	179.071"	18" RCP B WALL	23"	Hole 26	26"	26.891"	6.5"	0"
Invert 4										
Invert 5										
Invert 6										
Invert 7										
Invert 8										

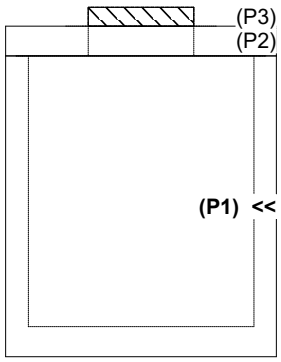

RIGHT-SIDE UP VIEW (int. dimensions)

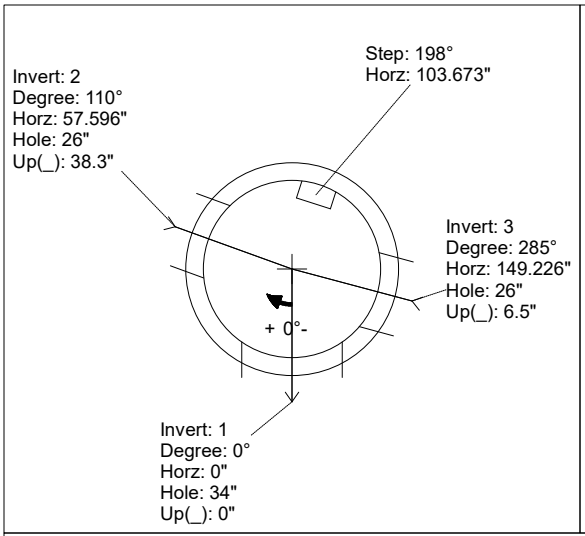

UPSIDE-DOWN VIEW (int. dimenions)

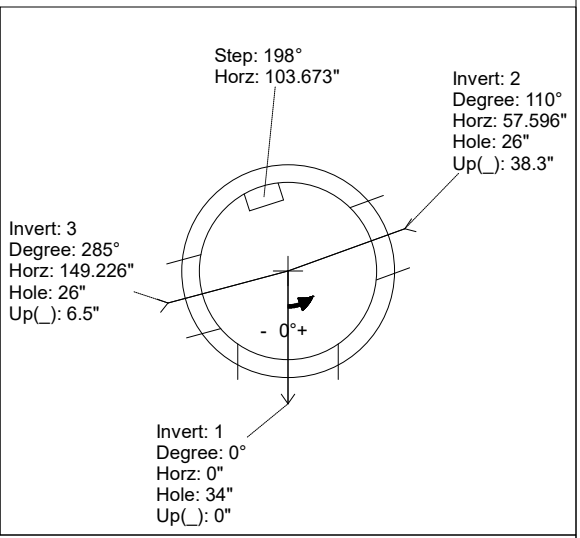

INSIDE WALL DIMENSIONS

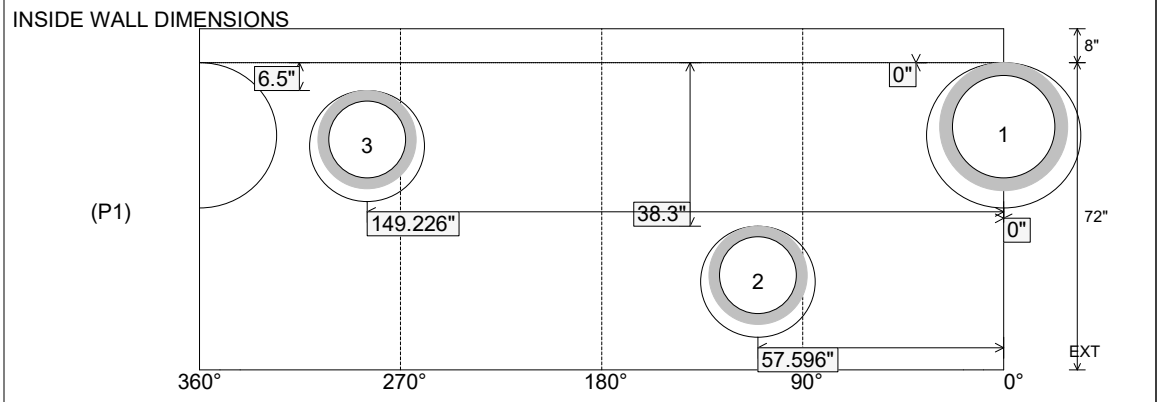

Coating (Int): Coating (Ext):	Seam Up: Flat Seam Dn: n/a	Wall Thickness: 6" Floor Height: 8"	Height (Int): 72" Height (Ext): 80"	Weight (Net): 9218 lb Volume (Net): 2.36cu.yd

Job Name: 25-1401 Irwin Landing Ph. 1 Job Location: Murfreesboro, TN Contractor: Bear Construction LLC	Plant: Beaver Dam 6/9/2026 10:36:47 AM	Tech: S. Felletter PC: Erica Bradley	

Structure ID: R2

P1 MH060BA72 MH BASE F/n

P3) 28" x 28" - CASTING HEIGHT - 5"	0 lb
P2) 60" - MH FLAT TOP w/28"x28" Hole F/F - 8"	2217 lb
P1) 60" - MH BASE F/n - 72"	9218 lb
1) 60" - STORM INVERT CHANNEL - 1/4 HEIGHT	1700 lb
1) CASTING - JBS 3104-V SINGLE SET	250 lb
1) 60" - Conseal CS-102 1.00"	0 lb
1) 28" x 28" - Conseal CS-102 1.00"	0 lb
1) Hole - 34	0 lb
2) Hole - 26	0 lb
6) MH Step ML-10-TDS-NCR - 10"	0 lb
Structure Total:	13385 lb

Structure Notes: .
1. PER ASTM C478 SPECIFICATIONS.
2. CONCRETE = 4,000 PSI AT 28 DAYS.
3. CASTING BY ICAST (JBS-3104 SINGLE SET).
.
REINFORCING PER ASTM A615 (GRADE 60).
- TOP SLAB (As .62) #5 BARS AT 6" C.C.E.W..
- RISER/WALLS (As .18)
- FLOOR (As .37) #5 BARS AT 10" C.C.E.W.

Invert channel drawing
1/4 Height storm invert

Rim: 573.26' Rim to Invert: 6.94' Slack: 1.28" Sump: 3" Step Position: 198

Position	Elev	Angle	Ext. (cw)	Pipe	Pipe OD	Connector	Hole	Horz Size	Up (_)	Offset
Invert 1	566.32'	0°	0"	24" RCP B WALL	30"	Hole 34	34"	36.147"	0"	0"
Invert 2	569.47'	110°	69.115"	18" RCP B WALL	23"	Hole 26	26"	26.891"	38.3"	0"
Invert 3	566.82'	285°	179.071"	18" RCP B WALL	23"	Hole 26	26"	26.891"	6.5"	0"
Invert 4										
Invert 5										
Invert 6										
Invert 7										
Invert 8										

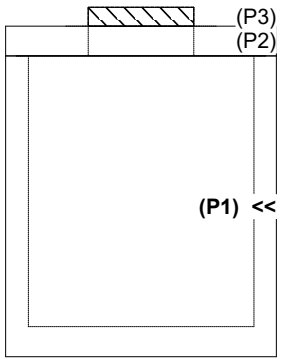

RIGHT-SIDE UP VIEW (int. dimensions)

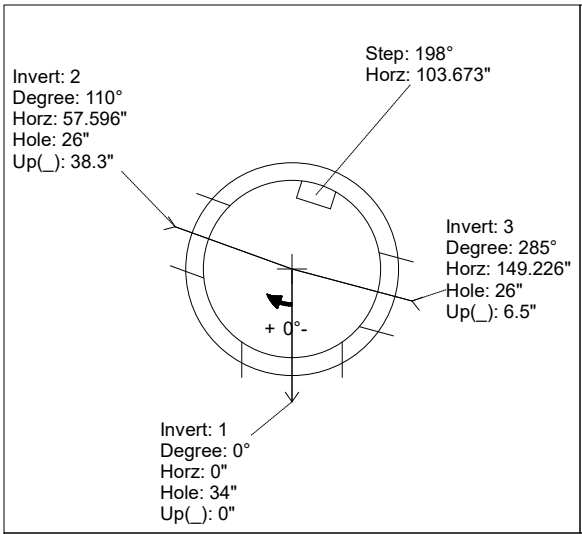

UPSIDE-DOWN VIEW (int. dimenions)

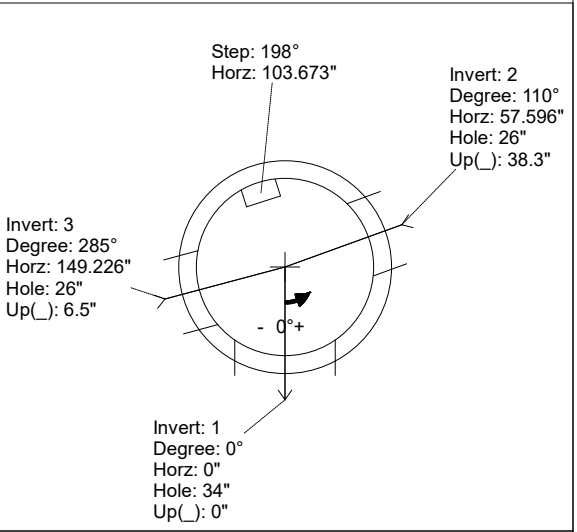

INSIDE WALL DIMENSIONS

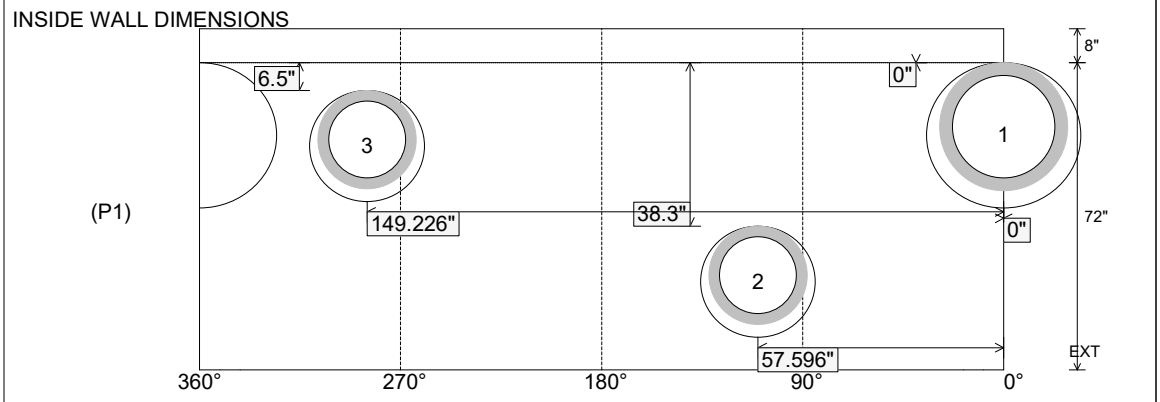

Coating (Int): Coating (Ext):	Seam Up: Flat Seam Dn: n/a	Wall Thickness: 6" Floor Height: 8"	Height (Int): 72" Height (Ext): 80"	Weight (Net): 9218 lb Volume (Net): 2.36cu.yd

Job Name: 26-1899 - Gateway 65 Industrial Road Job Location: Franklin, KY Contractor: RD Sitework LLC	Plant: 100 4/20/2026 1:53:55 PM	Tech: Jared - F PC: E. Bardley	

Structure ID: 58 HW

P1 HWSF24 **24" - SLOPED & FLARED HEADWALL F/F**

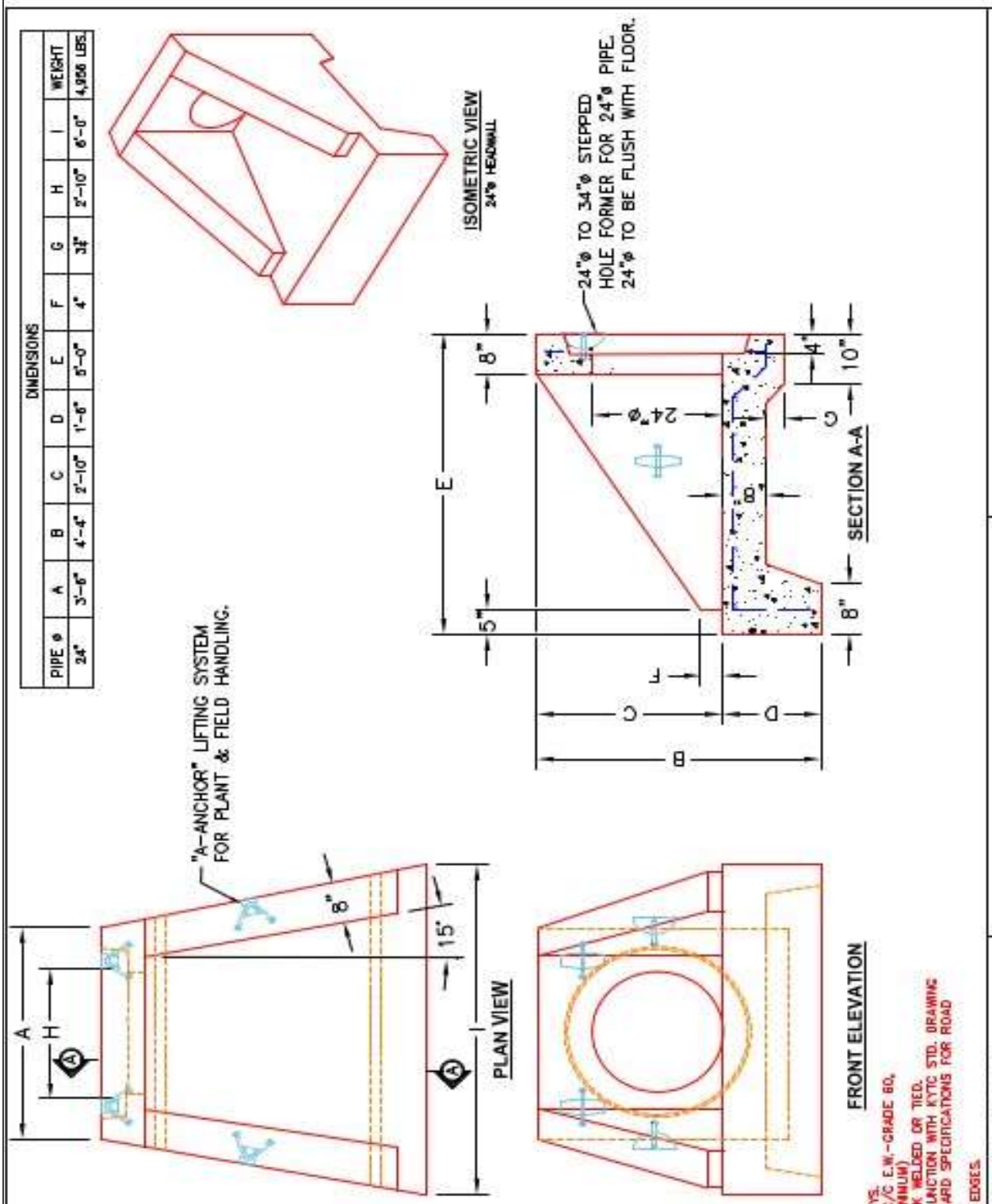

DIMENSIONS												
PIPE ø	A	B	C	D	E	F	G	H	I	WEIGHT
24"	3'-6"	4'-4"	2'-10"	1'-6"	5'-0"	4"	32"	2'-10"	6'-0"	4,956 LBS.

~NOTES:

1. CONCRETE: 4500 PSI @ 28 DAYS.
2. REINFORCING: #4 BAR @ 12" C/C E.W.-GRADE 60, (WITH 2" CONCRETE COVER MINIMUM)
3. REINFORCING BARS TO BE TACK WELDED OR TIED.
4. DRAWING TO BE USED IN CONJUNCTION WITH KYTC STD. DRAWING RDH-020-03 AND THE STANDARD SPECIFICATIONS FOR ROAD AND BRIDGE CONSTRUCTION.
5. 3/4" CHAMFER ON ALL EXPOSED EDGES.

PRODUCTION WORK ORDER

QUALITY CONTROL CHECKLIST

- ☐ ALL DIMENSIONS CORRECT.
- ☐ LIFTERS INSTALLED.
- ☐ STEPPED HF CORRECT SIZE.
- ☐ REINFORCING CORRECT.
- ☐ DISSIPATOR BLOCK INSTALLED.
- ☐ EDGES CHAMFERED.
- ☐ ALL PATCHWORK ACCEPTABLE.

PRODUCT I.D.: HWSF24	DESCRIPTION: KYTC 24"ø SLOPED & FLARED HEADWALL
PRODUCT VIEW: RIGHT SIDE UP	CUSTOMER: STOCK
PLANT: BEAVER DAM, KY.	PROJECT: STOCK INVENTORY
WEIGHT: 4,956 LBS.	STRUCTURE ID.: N/A
TOP SECTION JOINT: N/A	QUOTE/SALES ORDER NO: N/A
BASE SECTION JOINT: N/A	CHECK: J.H. ROSS, PE / DRAWING: N. RICHARDS
QC CHECK INITIALS:	DATE: REV. 4/22/24 / SCALE: NTS / PG. 1 of 1

THIS DRAWING IS THE PROPERTY OF INFRASTRUCTURE PRECAST, INC. ANY USE OR DUPLICATION OF THIS DRAWING WITHOUT PRIOR AUTHORIZATION IS STRICTLY PROHIBITED.

Job Name: 26-1899 - Gateway 65 Industrial Road Job Location: Franklin, KY Contractor: RD Sitework LLC	Plant: 100 4/20/2026 1:53:54 PM	Tech: Jared - F PC: E. Bardley	

Structure ID: 12 HW

P1 HWSF18 **18" - SLOPED & FLARED HEADWALL F/F**

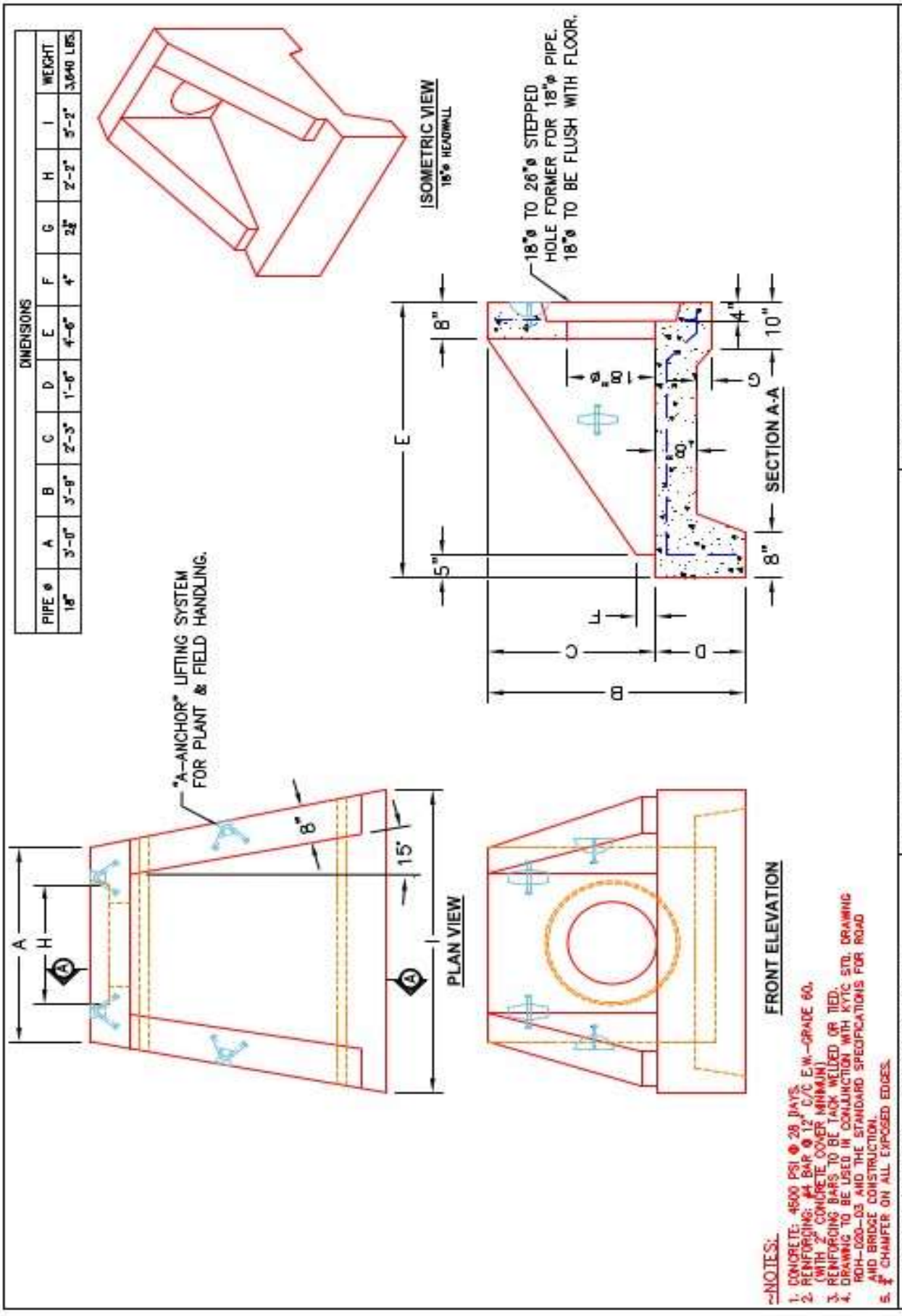

Job Name: 25-3193 - KYTC Kenton Co Call 328 (251320) Job Location: Independence, KY Contractor: Eaton Asphalt	Plant: 100 6/10/2026 11:59:15 AM	Tech: Jared - A PC: J. Jarvis	

Structure ID: ICAST LI9 (2)

P1 HWPC3453 **53" x 34" - PIPE CULVERT HEADWALL (ELL.RCP) F/F**

GENERAL NOTES:

1. THIS DRAWING TO BE USED IN CONJUNCTION WITH KYTC STANDARD DRAWINGS RDH-110-02, RDH-220-02, RDH-350-03, & STANDARD SPECIFICATIONS FOR ROAD & BRIDGE CONSTRUCTION
2. CONCRETE: 4,500 PSI AT 28 DAYS
3. REINFORCEMENT: #5 BAR @ 12" C.C. E.W. (GRADE 60) - 2" MIN. REBAR CLEARANCE (TYP)
   - SEE PG. 2 OF 3 FOR REBAR LAYOUTS
   - SEE PG. 3 OF 3 FOR REBAR CUTSHEET & DETAILS
4. REINFORCING BARS TO BE TACK WELDED OR TIED
5. ¾" CHAMFER REQUIRED ON ALL EXPOSED EDGES
6. PIPE & LIFTING ANCHOR POCKETS TO BE GROUTED BY CONTRACTOR
7. WEIGHT: 16,225 LBS

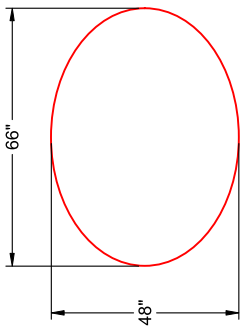

OPENING FOR 34" X 53" HERCP

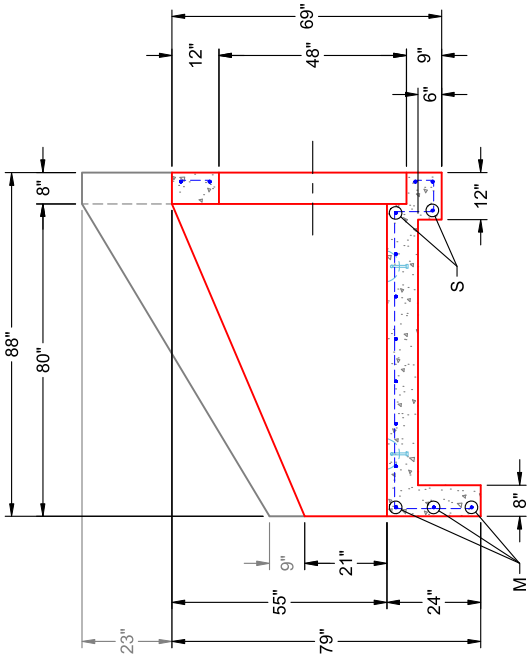

SECTION A-A
(RIGHT SIDE UP)

PG. 1 OF 3

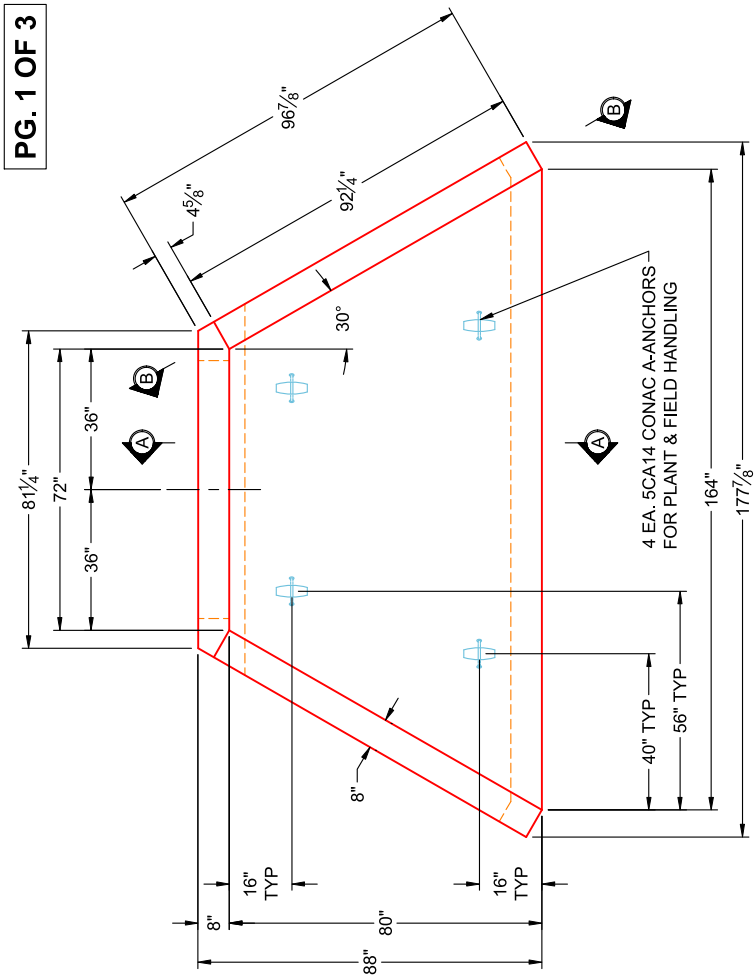

TOP VIEW
(RIGHT SIDE UP)

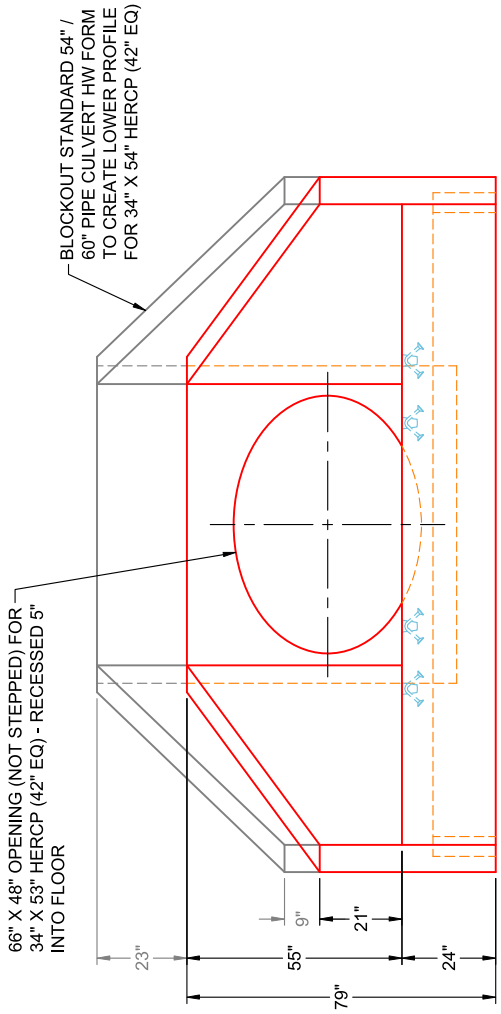

FRONT VIEW
(RIGHT SIDE UP)

Job Name: 25-3193 - KYTC Kenton Co Call 328 (251320) Job Location: Independence, KY Contractor: Eaton Asphalt	Plant: 100 6/10/2026 11:59:15 AM	Tech: Jared - A PC: J. Jarvis	

Structure ID: ICAST LI9 (2)

P1 HWPC3453 **53" x 34" - PIPE CULVERT HEADWALL (ELL.RCP) F/F**

GENERAL NOTES:

1. THIS DRAWING TO BE USED IN CONJUNCTION WITH KYTC STANDARD DRAWINGS RDH-110-02, RDH-220-02, RDH-350-03, & STANDARD SPECIFICATIONS FOR ROAD & BRIDGE CONSTRUCTION
2. CONCRETE: 4,500 PSI AT 28 DAYS
3. REINFORCEMENT: #5 BAR @ 12" C.C. E.W. (GRADE 60) - 2" MIN. REBAR CLEARANCE (TYP)
   - SEE PG. 1 OF 3 FOR HEADWALL DIMENSIONS
   - SEE PG. 3 OF 3 FOR REBAR CUTSHEET & DETAILS
4. REINFORCING BARS TO BE TACK WELDED OR TIED
5. ¾" CHAMFER REQUIRED ON ALL EXPOSED EDGES
6. PIPE & LIFTING ANCHOR POCKETS TO BE GROUTED BY CONTRACTOR
7. WEIGHT: 16,225 LBS

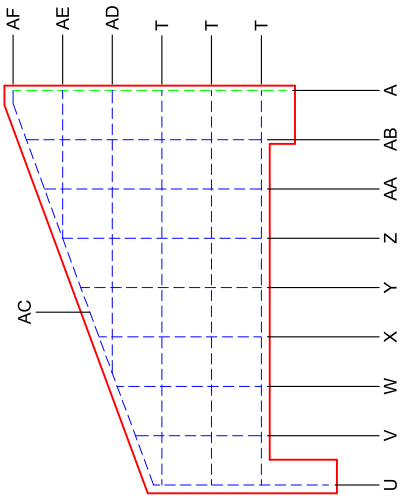

SECTION B-B
(RIGHT SIDE UP)

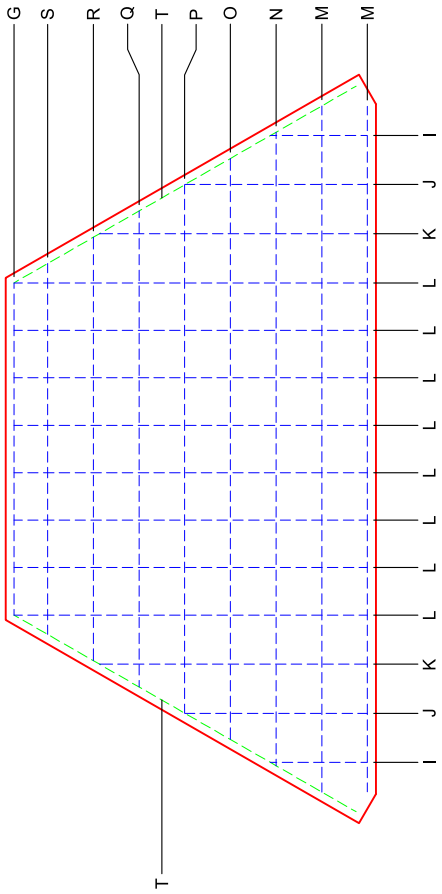

SECTION C-C
(RIGHT SIDE UP)

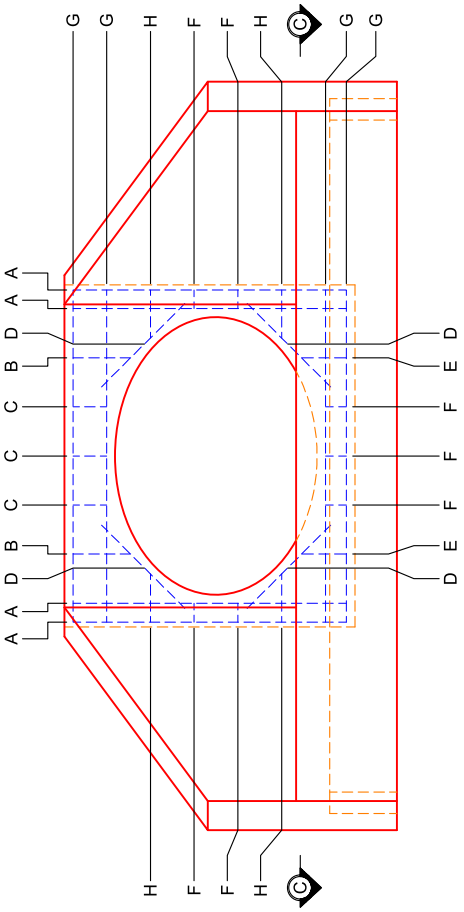

FRONT VIEW
(RIGHT SIDE UP)

Job Name: 25-3193 - KYTC Kenton Co Call 328 (251320)
Job Location: Independence, KY
Contractor: Eaton Asphalt

Plant: 100
6/10/2026 11:59:15 AM

Tech: Jared - A
PC: J. Jarvis

Structure ID: ICAST LI9 (2)

P1 HWPC3453 53" x 34" - PIPE CULVERT HEADWALL (ELL.RCP) F/F

ITEM #	LENGTH	SIZE	QTY
A	65"	#5	4
B	14"	#5	2
C	8"	#5	3
D	28"	#5	4
E	11"	#5	2
F	5"	#5	7
G	79"	#5	5
H	12"	#5	4
I	23"	#5	2
J	44"	#5	2
K	64"	#5	2
L	SEE DETAIL	#5	8
M	163"	#5	4
N	151"	#5	1
O	138"	#5	1
P	126"	#5	1

ITEM #	LENGTH	SIZE	QTY
Q	114"	#5	1
R	101"	#5	1
S	82"	#5	2
T	94"	#5	6
U	42"	#5	2
V	30"	#5	2
W	35"	#5	2
X	39"	#5	2
Y	43"	#5	2
Z	48"	#5	2
AA	52"	#5	2
AB	56"	#5	2
AC	97"	#5	2
AD	68"	#5	2
AE	36"	#5	2
AF	4"	#5	2

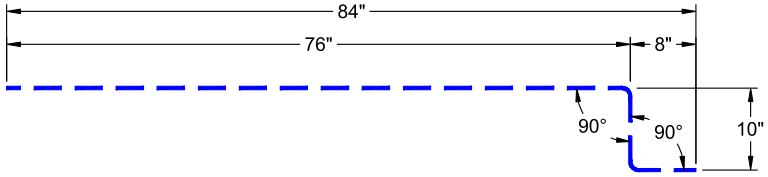

REBAR PIECE "L"
#5 REBAR
TOTAL LENGTH: 94"
QTY: 8

Job Name: 26-2030 - KYTC McCracken Co. Call 111 (ID 264505) Job Location: Paducah, KY Contractor: Jim Smith Contracting Co, LLC	Plant: 100 6/12/2026 7:55:30 AM	Tech: J. Horsley PC: J. Jarvis	

Structure ID: 50+94 RT HW3 HWSBO1

P1 HWSBO18 **18" - SLOPED BOX OUTLET TYPE 1 F/F**

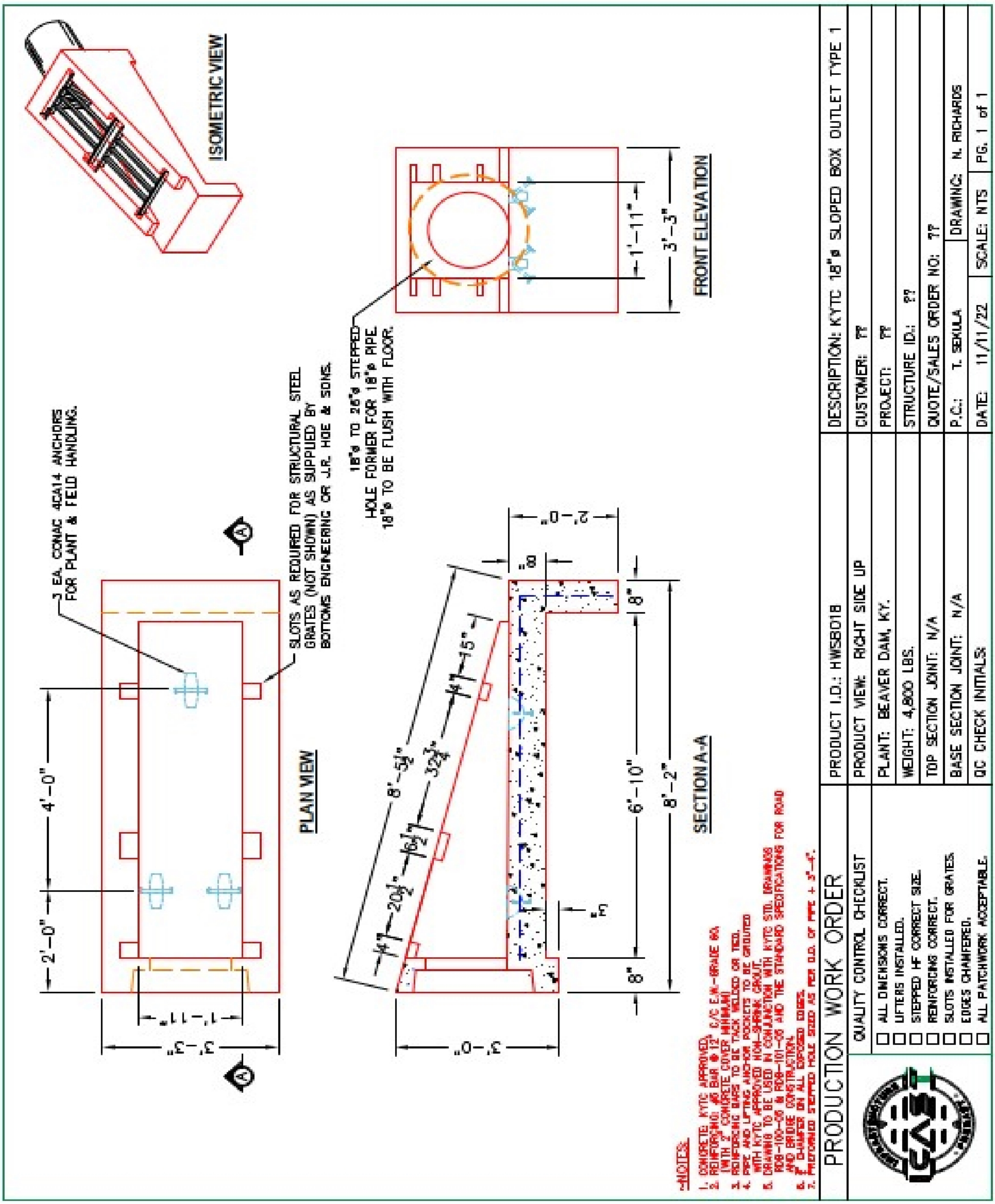

26-2485 855358 Fuqua Development

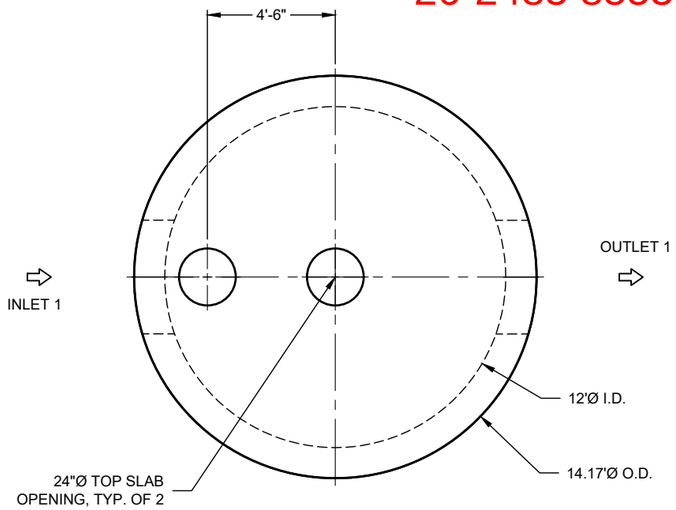

PLAN VIEW
INTERNALS NOT SHOWN

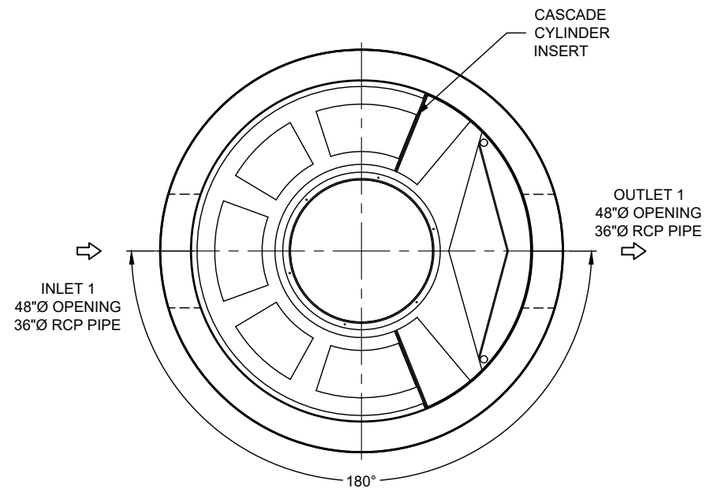

PLAN VIEW FOR PIPE ORIENTATION
TOP SLAB NOT SHOWN

MATERIAL LIST

COUNT	DESCRIPTION	PART NUMBER	PROVIDED BY	INSTALLED BY
1	CS-12 CYLINDER INSERT, STD	325-003982	CONTECH	CONTRACTOR
1	CS-12 CYLINDER TOP	325-003988	CONTECH	CONTRACTOR
10	CS-12 ALUMINUM INSTALLATION BRACKETS	325-003971	CONTECH	PRECASTER
1	CS-12 HARDWARE KIT	325-003983	CONTECH	CONTRACTOR
1	SEALANT FOR JOINTS		PRECASTER	CONTRACTOR
2	24"Ø X 4" FRAME AND COVER, EJ #41600389, OR EQUIV.	325-000350	CONTECH	CONTRACTOR

GENERAL NOTES

1. DESIGN LOADING - AASHTO HS-20
2. ALL PRECAST CONCRETE MANUFACTURED PARTS SHALL CONFORM TO ASTM C-478, WITH MINIMUM CONCRETE STRENGTH OF 4000 PSI AT 28 DAYS
3. JOINT SEALANT SHALL CONFORM TO ASTM C-990 OR ASTM C-443
4. GROUND WATER ELEVATION ASSUMED AT OUTLET INVERT
5. MANUFACTURING TOLERANCE = +/- 1/2-INCH
6. SOME HIDDEN LINES MAY BE OMITTED FOR CLARITY

INSTALLATION NOTES

A. PRECASTER TO SHIP ACCESS CASTINGS WITH STRUCTURE
B. REFER TO CONTECH ASSEMBLY INSTRUCTIONS FOR ADDITIONAL INFORMATION.
C. PRECASTER TO INSTALL INTERNAL COMPONENTS PRIOR TO SHIPPING UNLESS INSTRUCTED OTHERWISE BY CONTECH
D. PIPE OPENINGS SHALL BE STENCILED "INLET" OR "OUTLET" AS APPROPRIATE
E. APPLYING ALIGNMENT MARKS ON ALL PIECES OF MULTIPLE PIECE ASSEMBLIES IS ENCOURAGED
F. IF STRUCTURE IS DELIVERED IN MULTIPLE SECTIONS, EACH PIECE SHALL BE LABELED WITH THE CONTECH PROJECT NUMBER, SEQUENCE NUMBER AND SITE DESIGNATION

SITE INFORMATION

RIM ELEV. = 1019.03+/-
TOP OF STRUCTURE = 1018.20
INLET PIPE 1 INVERT ELEV. = 1009.20
INLET PIPE 1 DIAMETER AND MATERIAL = 36"Ø RCP
OUTLET PIPE INVERT ELEV. = 1009.20
OUTLET PIPE DIAMETER AND MATERIAL = 36"Ø RCP
OUTSIDE BOTTOM OF STRUCTURE ELEV. = 999.03

STRUCTURE WEIGHT

APPROXIMATE HEAVIEST PICK = 44500 LBS.
STRUCTURE IS DELIVERED IN 5 PIECES

TOP SLAB = 25500 LBS.
RISER 3 = 24500 LBS.
RISER 2 = 44500 LBS.
CONTROL RISER = 32500 LBS.
BASE SECTION = 44500 LBS.

ICAST to install brackets only

INTERNAL COMPONENTS TO BE INSTALLED ON SITE BY CONTECH FIELD CONSULTANT. PRECASTER TO SHIP ALL INTERNAL COMPONENTS WITH STRUCTURE

SEE INSTALLATION NOTE A

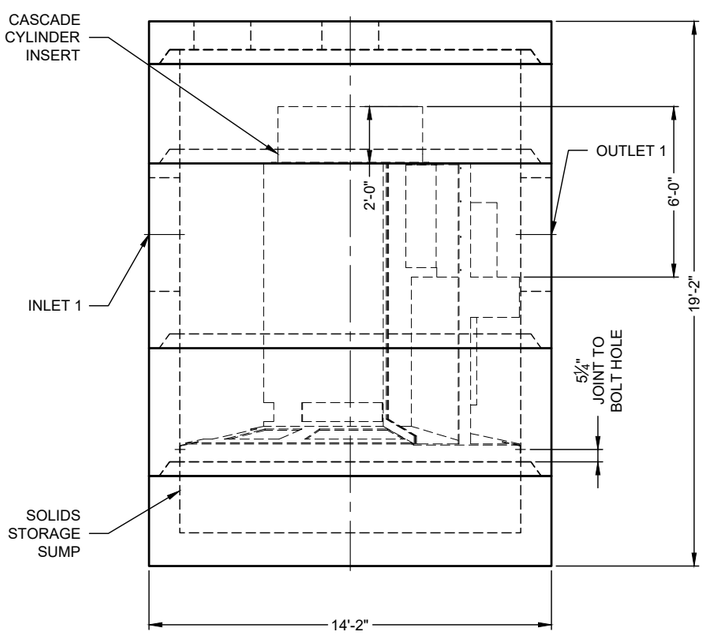

ELEVATION VIEW

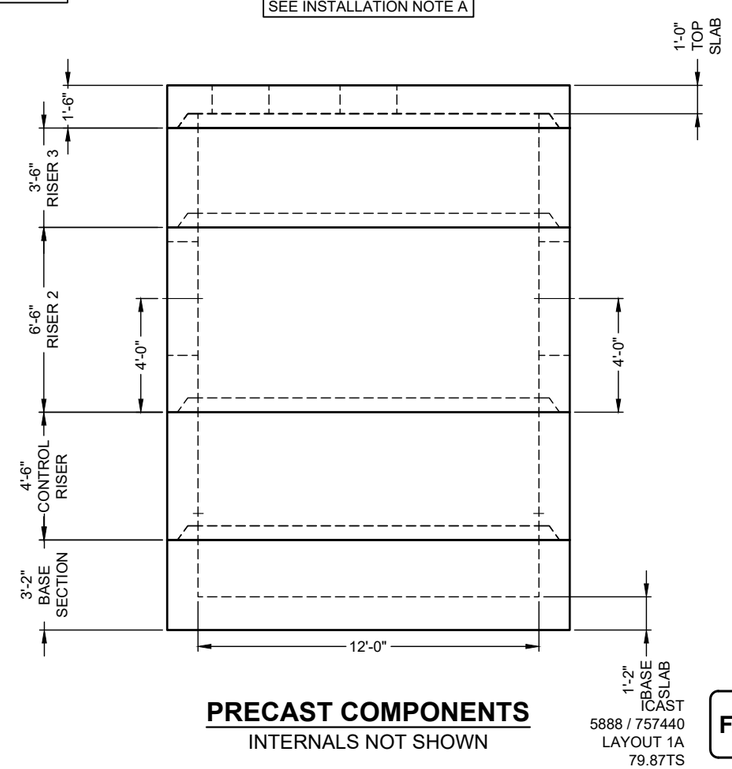

PRECAST COMPONENTS
INTERNALS NOT SHOWN

ICAST
5888 / 757440
LAYOUT 1A
79.87TS

CONTECH
FABRICATION
DRAWING

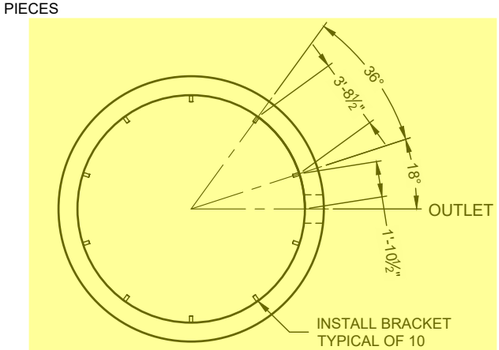

SUPPORT BRACKET LAYOUT PLAN VIEW

The design and information shown on this drawing is provided as a service to the project owner, engineer and contractor by CONTECH Construction Products Inc. or one of its affiliated companies ("CONTECH"). Neither this drawing nor any part thereof may be used, reproduced or modified in any manner without the prior written consent of CONTECH. Failure to comply is done at the user's own risk and CONTECH expressly disclaims any liability or responsibility for such use.

If discrepancies between the supplied information upon which the drawing is based and field conditions are encountered as site work progresses, these discrepancies must be reported to CONTECH immediately for re-evaluation of the design. CONTECH accepts no liability for designs based on missing, incomplete or inaccurate information supplied by others.

MARK	DATE	REVISION DESCRIPTION	BY

CS-12 - 855358-010
FUQUA DEVELOPMENT - STONEDALE
NICHOLASVILLE, KY
SITE DESIGNATION: WQU #1

CONTECH® ENGINEERED SOLUTIONS LLC
A QUIKRETE COMPANY
9100 Centre Pointe Dr., Suite 400, West Chester, OH 45069
800-338-1122 513-645-7000 513-645-7993 FAX
CASCADE® separator®
FOR PATENT INFORMATION, GO TO www.ContechES.com/IP

DATE: 5/8/2026	
DESIGNED: MDB	DRAWN: JRP
CHECKED: LJK	APPROVED: MDB
PROJECT No.: 855358	SEQUENCE No.: 010
SHEET: 1 OF 1	

C:\USERS\MICHAEL.BEAVER\ONEDRIVE - THE QUIKRETE COMPANIES\DYNAMICS365 - CONTECH - PROJECTS\855358\PRODUCTS\855358-10-CASCADE\DRAWINGS\855358-10-CS-12-CONFAB.DWG 5/8/2026 3:28 PM

26-2485 855358 Fuqua Development

V1600-3 V1610-3 Assembly

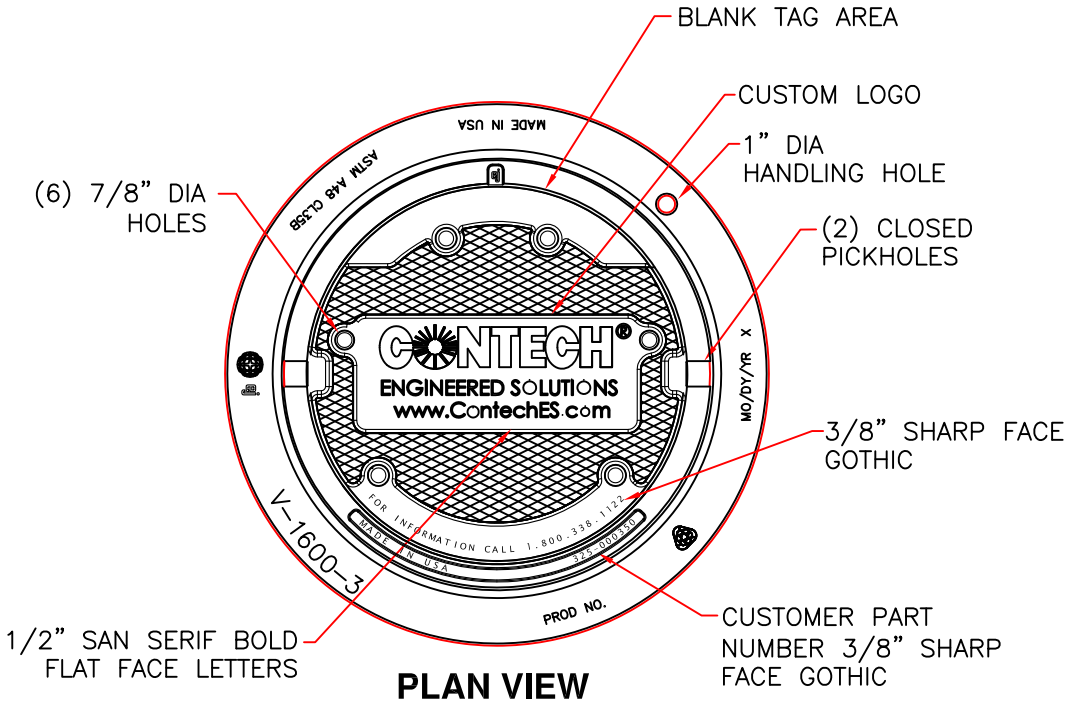

PLAN VIEW

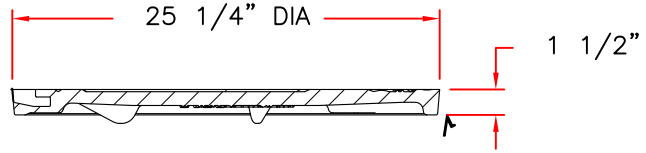

COVER SECTION

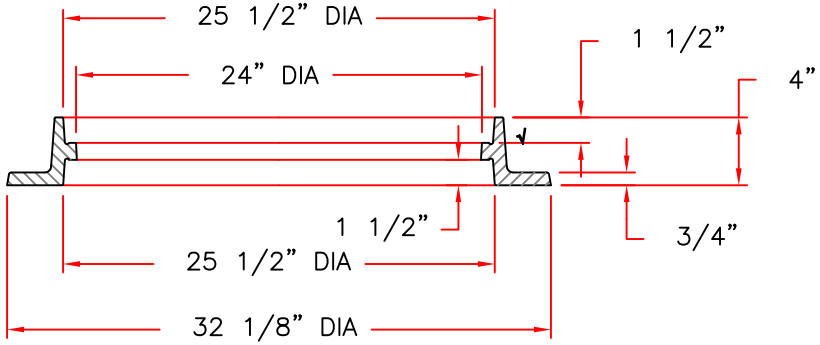

RING SECTION

Product Number

41600389

Design Features

-Materials
Frame
Gray Iron (CL35B)
Cover
Gray Iron (CL35B)

-Design Load
Heavy Duty
-Open Area
n/a
-Coating
Undipped
-√ Designates Machined Surface

Certification

-
-ASTM A48
-
-Country of Origin: USA

Major Components

41600310
41600374

Drawing Revision

05/02/2008 Designer: DEW
6/20/2017 Revised By: DAE

Disclaimer

Weights (lbs./kg) dimensions (inches/mm) and drawings provided for your guidance. We reserve the right to modify specifications without prior notice.

CONFIDENTIAL: This drawing is the property of EJ GROUP, Inc., and embodies confidential information, registered marks, patents, trade secret information, and/or know how that is the property of EJ GROUP, Inc. Copyright © 2012 EJ GROUP, Inc. All rights reserved.

Contact

800 626 4653
ejco.com

26-2485 855358 Fuqua Development

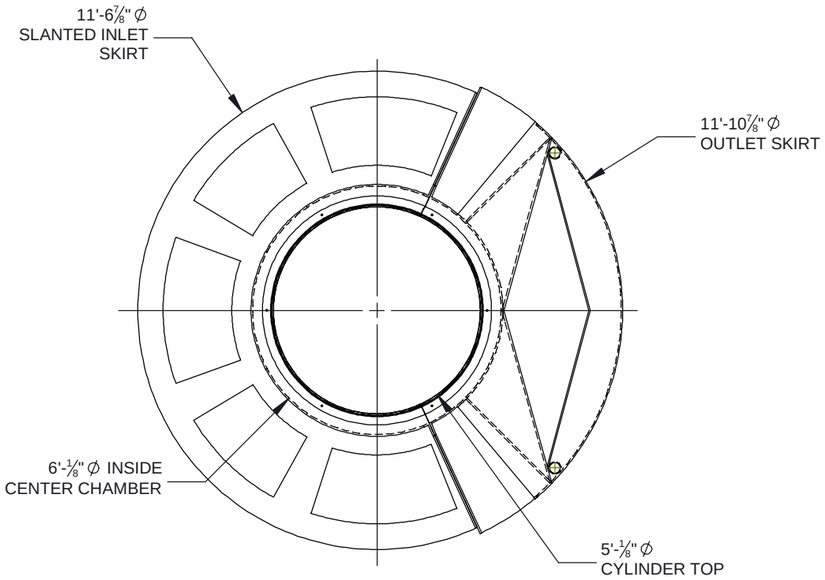

PLAN VIEW

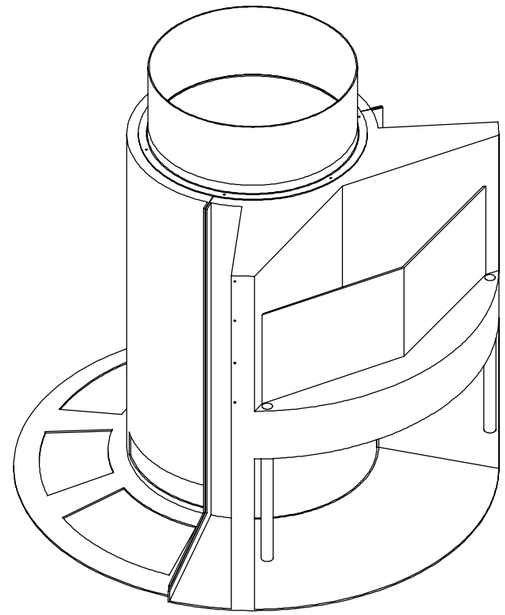

ISOMETRIC VIEW

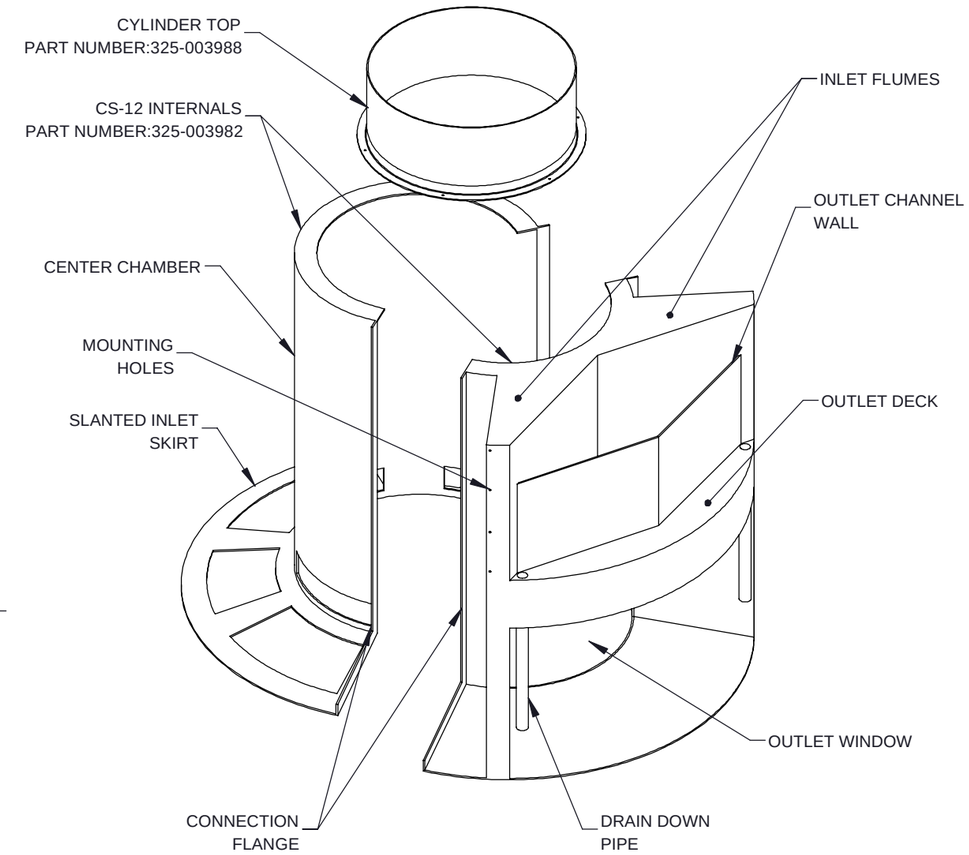

EXPLODED ISOMETRIC VIEW

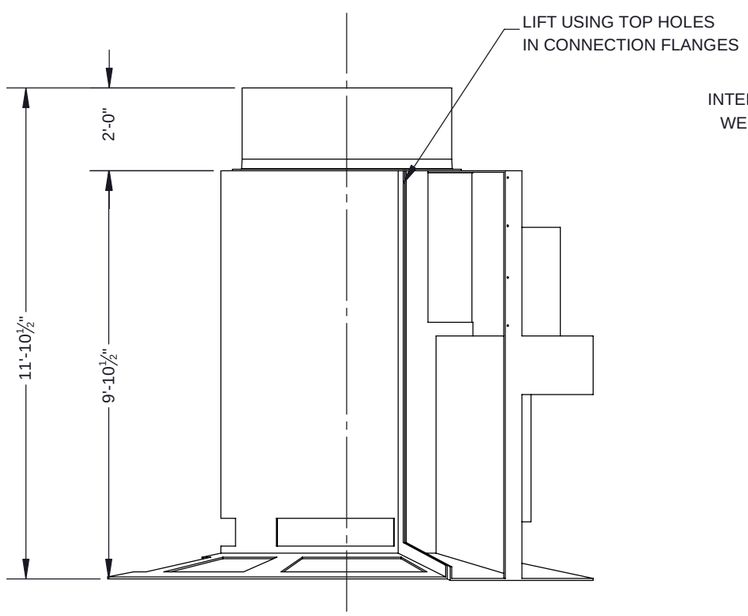

ELEVATION VIEW

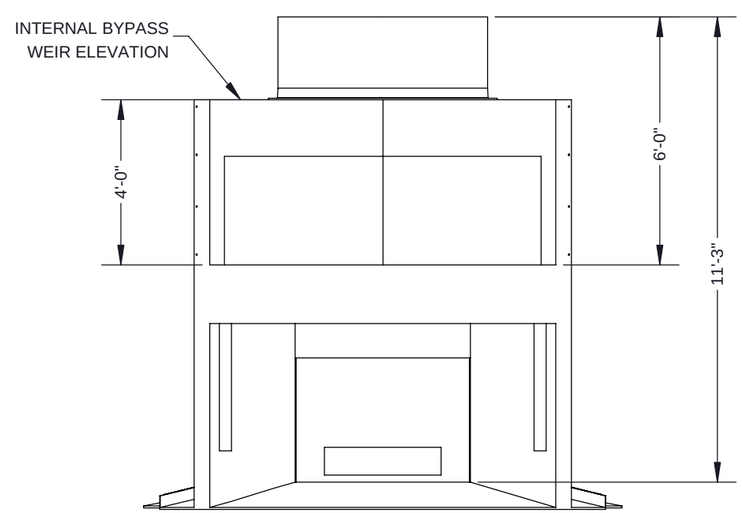

ELEVATION VIEW: OUTLET SIDE

NOTES:
1. SEE CASCADE SEPARATOR INSTALLATION GUIDE FOR ADDITIONAL INFORMATION

The design and information shown on this drawing is provided as a service to the project owner, engineer and contractor by Contech Engineered Solutions LLC. or one of its affiliated companies ("Contech"). Neither this drawing, nor any part thereof, may be used, reproduced or modified in any manner without the prior written consent of Contech. Failure to comply is done at the user's own risk and Contech expressly disclaims any liability or responsibility for such use.

If discrepancies between the supplied information upon which the drawing is based and actual field conditions are encountered as site work progresses, these discrepancies must be reported to Contech immediately for re-evaluation of the design. Contech accepts no liability for designs based on missing, incomplete or inaccurate information supplied by others.

CASCADE separator™

CONTECH ENGINEERED SOLUTIONS LLC
www.ContechES.com
9025 Centre Pointe Dr., Suite 400, West Chester, OH 45069
800-338-1122 513-645-7000 513-645-7993 FAX

REFERENCE DETAIL
INTERNALS CS-12 &
CYLINDER TOP
CASCADE SEPARATOR

THIRD ANGLE PROJECTION

UNLESS OTHERWISE SPECIFIED
DIMENSIONS ARE IN INCHES

TOLERANCES:
FRACTIONAL ± 1/16
ANGLES ± 1 DEGREE
TWO PLACE DECIMAL ± 0.06
THREE PLACE DECIMAL ± 0.030

PART NUMBER: 325-003982 & 003988		
APPROVED BY: M. BROOKS	DRAWN BY: J. BELL	
APPROVED BY DATE: 2021.10.21	DRAWN BY DATE: 2021.09.16	REV: C
SCALE: N/A	SHEET 1 OF 1	

Job Name: 26-1843 - Dutch Bros Coffee Job Location: Paducah, KY 42003 Contractor: Ainsworth Land Development, LLC	Plant: 100 6/24/2026 9:47:14 AM	Tech: Jared - A PC: T. Lewis	

Structure ID: STR 100 ST-OCS

P2 BX048048-08LD06S CB FLAT TOP 8"W SPEC. (HOE MCS-295-B) F/F

P3) 23.75" - CASTING (cast in) - 4"	0 lb
P2) 48" x 48" - CB FLAT TOP 8"W SPEC. (HOE MCS-295-B) F/F - 6"	1986 lb
P1) 48" x 48" - BOX BASE 8inW, 8inF, Variable Ht F/n - 21"	4953 lb
1) This Structure Includes a Cast-in Item - HOE MCS-295-B Frame (Supplied by iCast)	0 lb
1) CASTING - HOE MCS-295B F/G	123 lb
1) 48" x 48" - Conseal CS-102 1.00"	0 lb
1) DOGHOUSE INVRTD - 16"x15.5"	0 lb
4) Weir n/n - 48"x6.625"	0 lb
1) Weir n/n - 12"x6"	0 lb
1) Hole - 8	0 lb
Structure Total:	7063 lb

Structure Notes:

1. PER ASTM C-913 SPECIFICATIONS
2. CONCRETE: 4,500 PSI AT 28 DAYS
3. REINFORCEMENT: #5 BAR @ 6" C.C. E.W. (GRADE 60) - 2" MIN. REBAR CLEARANCE (TYP)
4. HOE MCS-295-B FRAME & BAR GRATE SUPPLIED BY ICAST - FRAME TO BE CAST INTO FLAT LID FLANGE SIDE UP
5. LIFTERS: 4 EA. 5CA14 CONAC A-ANCHORS FOR PLANT & FIELD HANDLING - INSTALLED AS SHOWN
6. TOP SURFACE TO RECEIVE LIGHT BRUSH FINISH

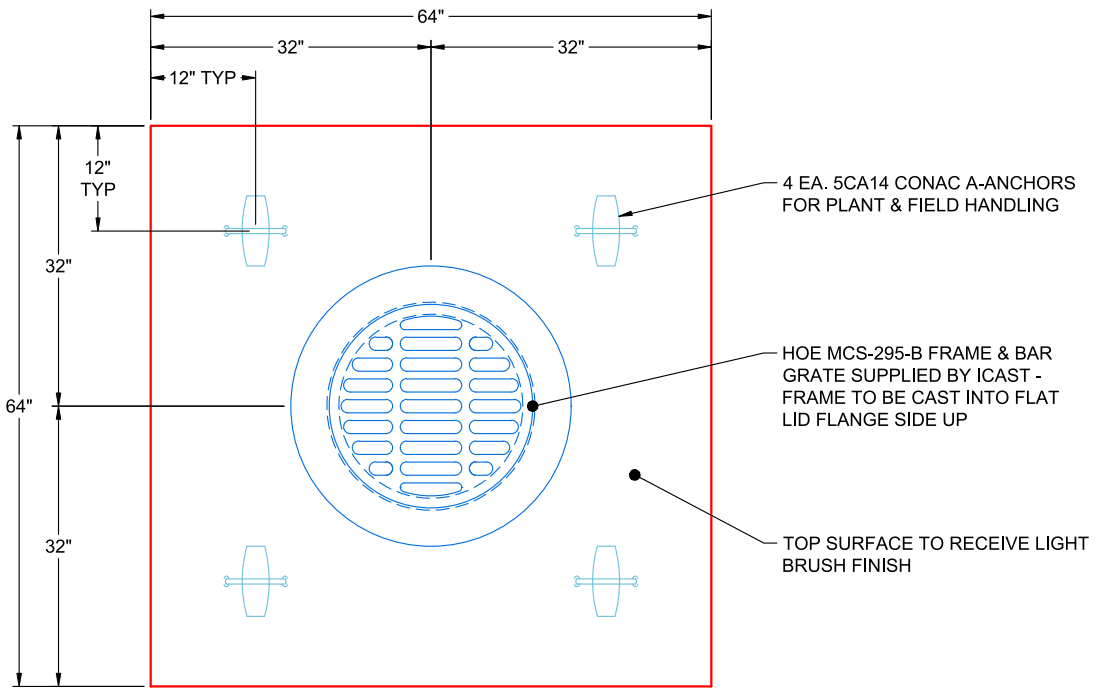

PLAN VIEW
(RIGHT SIDE UP)

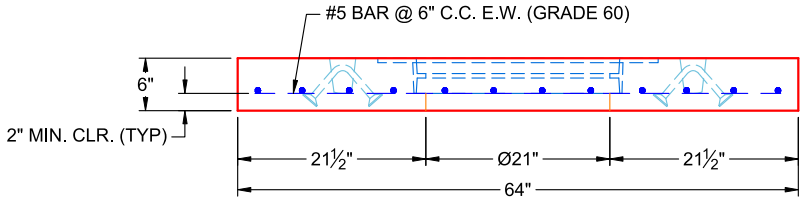

FRONT VIEW
(RIGHT SIDE UP)

Coating (Int): Coating (Ext):	Seam Up: Flat Seam Dn: Flat	Wall Thickness: 8"	Height (Ext): 6"	Weight (Net): 1986 lb Volume (Net): 0.51cu.yd

Job Number:
26-1843

Job Name:
Dutch Bros Coffee

Structure:
STR 100 ST-OCS

Note:
HOE MCS-295-B Frame Supplied By iCast To Be Cast Into Flat Lid Flange Side Up

Job Name: 25-3062 Portland Bypass Job Location: Portland, TN Contractor: Scotty's Contracting & Stone, LLC	Plant: Beaver Dam 6/1/2026 8:22:37 AM	Tech: J. Coppage PC: C. Goff	

Structure ID: CB-2

P1 BX3232-08BAVF BOX BASE 8inW, 8inF, Variable Ht

P2) 32" x 32" - CASTING HEIGHT - 7"	0 lb
P1) 32" x 32" - BOX BASE 8inW, 8inF, Variable Ht - 43"	5657 lb
1) CASTING - JBS-3123 MODIFIED SET	250 lb
1) 32" x 32" - Conseal CS-102 1.00"	0 lb
2) Hole - 26	0 lb
1) Hole - 6	0 lb

Structure Total:	5907 lb

Structure Notes:
1. PER TDOT D-CB-12LP / ASTM C913 SPEC'S.
2. CONCRETE = 4,000 PSI AT 28 DAYS.
3. NO INVERT CHANNEL.
4. JBS 3123 MOD SINGLE SET BY ICAST
5. REINFORCING PER ASTM A615 (GRADE 60).
- WALLS (As .62) #5 BARS AT 6" C.C.E.W.
- FLOOR (As .62) #5 BARS AT 6" C.C.E.W.

Rim: 785.88' Rim to Invert: 3.97' Slack: 0.14" Sump: 2.5" Step Position:

Position	Elev	Angle	Ext. (cw)	Pipe	Pipe OD	Connector	Hole	Horz Size	Up (_)	Offset
Invert 1	781.91'	0°	27"	18" RCP B WALL	23"	Hole 26	26"	26"	0"	3"
Invert 2	782.08'	180°	21"	18" RCP B WALL	23"	Hole 26	26"	26"	2.04"	-3"
Invert 3	783.38'	180°	37"	4" HDPE (perf pipe)	4.8"	Hole 6	6"	6"	19.74"	13"
Invert 4										
Invert 5										
Invert 6										
Invert 7										
Invert 8										

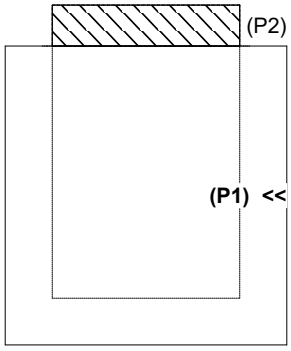

RIGHT-SIDE UP VIEW (int. dimensions)

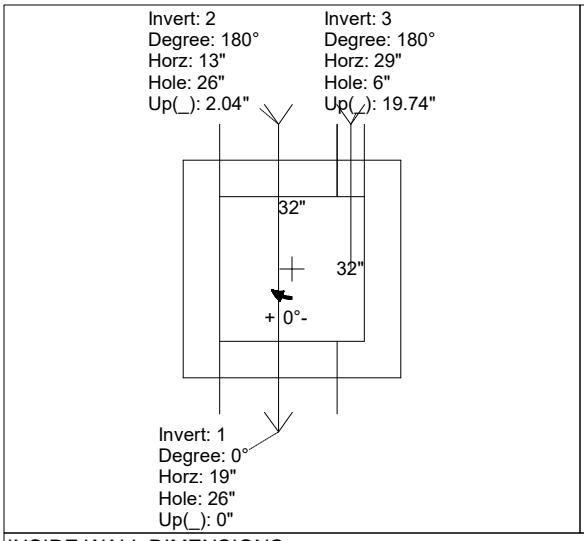

UPSIDE-DOWN VIEW (int. dimenions)

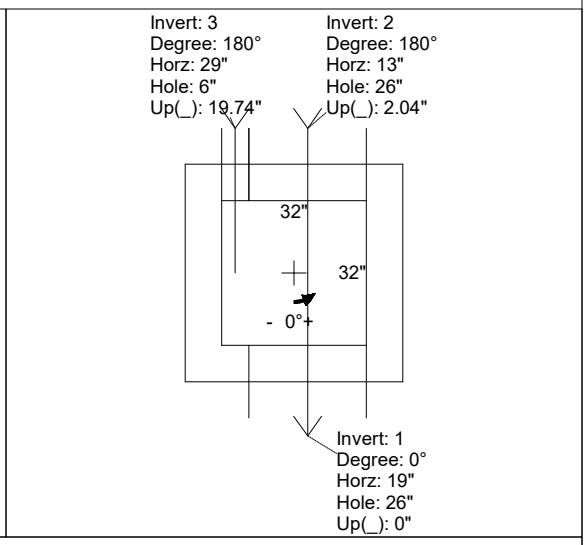

INSIDE WALL DIMENSIONS

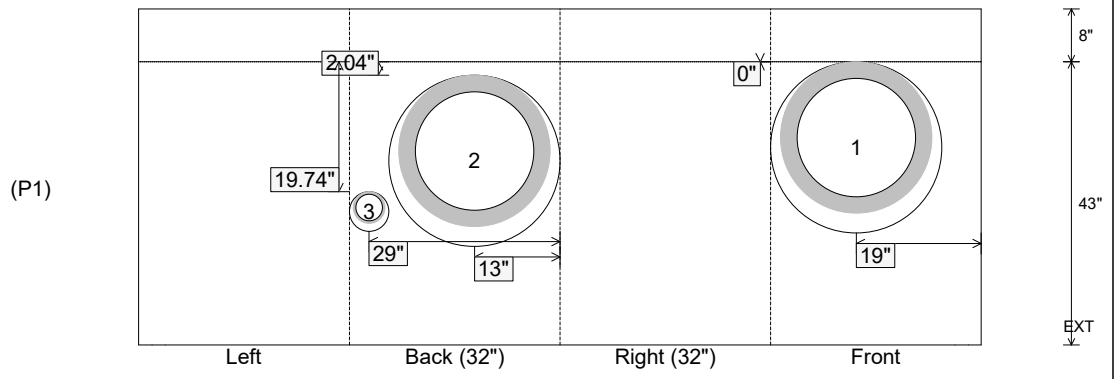

Coating (Int): Coating (Ext):	Seam Up: Flat Seam Dn: n/a	Wall Thickness: 8" Floor Height: 8"	Height (Int): 43" Height (Ext): 51"	Weight (Net): 5657 lb Volume (Net): 1.44cu.yd

Job Name: 25-1401 Irwin Landing Ph. 1 Job Location: Murfreesboro, TN Contractor: Bear Construction LLC	Plant: Beaver Dam 6/9/2026 10:40:18 AM	Tech: S. Felletter PC: Erica Bradley	

Structure ID: R8

P2 BX036036-08LD08-28x28 BX FLAT LID 8inW w/28"x28" HOLE F/F

P3) 28" x 28" - CASTING HEIGHT - 5"	0 lb
P2) 36" x 36" - BX FLAT LID 8inW w/28"x28" HOLE F/F - 8"	1289 lb
P1) 36" x 36" - BOX BASE 8inW, 8inF, Variable Ht F/n - 39"	5317 lb
1) 36" x 36" - STORM INVERT CHANNEL (FLAT) - 4" THK	450 lb
1) CASTING - JBS 3104-V SINGLE SET	250 lb
1) 36" x 36" - SGL 1"x14.5' Butyl (2x)	0 lb
3) Hole - 26	0 lb

Structure Total:	7306 lb

Structure Notes: .
1. PER ASTM C913 SPECIFICATIONS.
2. CONCRETE = 4,000 PSI AT 28 DAYS.
3. CASTING BY ICAST (JBS-3104 SINGLE SET).
.
REINFORCING PER ASTM A615 (GRADE 60).
- TOP SLAB (As .62) #5 BARS AT 6" C.C.E.W..
- WALLS (As .31) #5 BARS AT 12" C.C.E.W.
- FLOOR (As .31) #5 BARS AT 12" C.C.E.W.

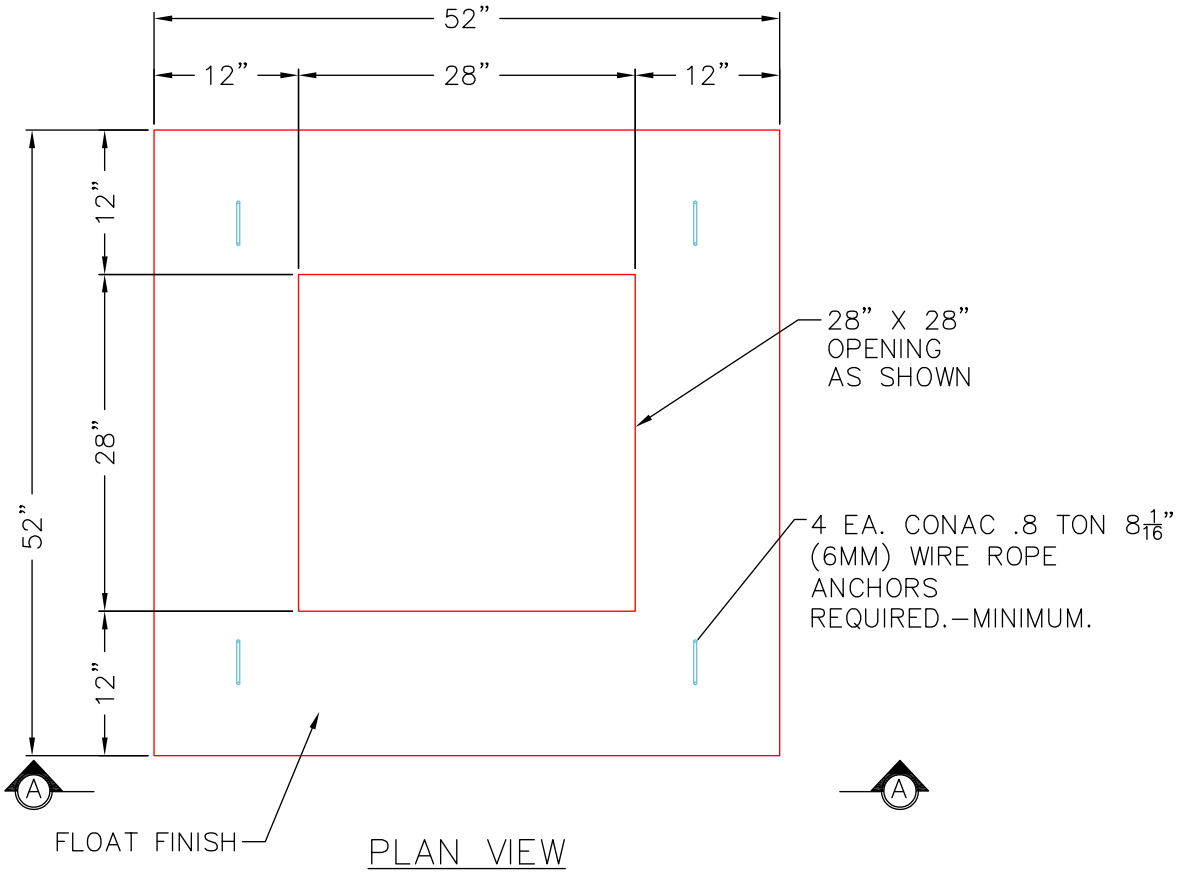

PLAN VIEW

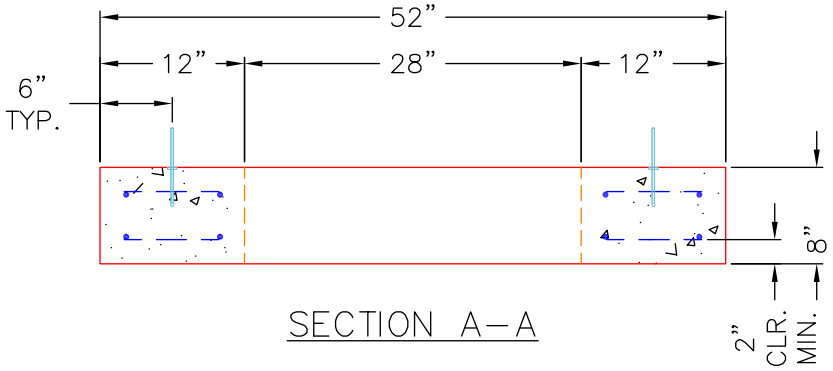

SECTION A—A

Coating (Int): Coating (Ext):	Seam Up: Flat Seam Dn: Flat	Wall Thickness: 8"	Height (Ext): 8"	Weight (Net): 1289 lb Volume (Net): 0.33cu.yd

Job Name: 25-2952 - KYTC Jefferson Co Call 106 (251315) Job Location: Indiana, KY Contractor: Louisville Paving and Construction	Plant: 100 6/12/2026 3:09:44 PM	Tech: J. Horsley - A PC: J. Jarvis	

Structure ID: 19

P1 BX2424-08BAVF BOX BASE 8inW, 8inF, Variable Ht F/n

P3) 19.5" - CASTING (cast in) - 2.75"	0 lb
P2) 24" x 24" - CB FLAT TOP 8"W (HOE KY-210) F/F - 8"	943 lb
P1) 24" x 24" - BOX BASE 8inW, 8inF, Variable Ht F/n - 31"	3527 lb
1) This Structure Includes a Cast-in Item - HOE KY-210 Frame (Supplied By Others)	0 lb
1) 24" x 24" - Conseal CS-102 1.00"	0 lb
1) Hole - 20	0 lb
Structure Total:	4470 lb

Structure Notes:

** KYTC STATE PROJECT **

1. PER KYTC DBI TYPE 14 / ASTM C-913 SPECS
2. CONCRETE: 4,000 PSI AT 28 DAYS
3. REINFORCEMENT: #5 BAR @ 12" C.C. E.W. (GRADE 60) - 2" MIN. REBAR CLEARANCE (TYP)
4. HOE KY-210 FRAME & GRATE SUPPLIED BY OTHERS - FRAME TO BE CAST INTO FLAT LID

Rim: 565' Rim to Invert: 3.25' Slack: 0" Sump: 0" Step Position:

Position	Elev	Angle	Ext. (cw)	Pipe	Pipe OD	Connector	Hole	Horz Size	Up (_)	Offset
Invert 1	561.75'	90°	20"	15" HDPE	17.6"	Hole 20	20"	20"	-2.5"	0"
Invert 2										
Invert 3										
Invert 4										
Invert 5										
Invert 6										
Invert 7										
Invert 8										

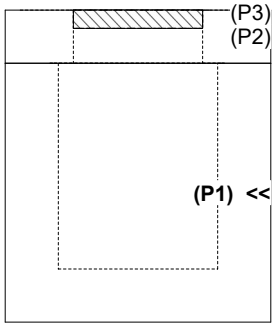

RIGHT-SIDE UP VIEW (int. dimensions)

UPSIDE-DOWN VIEW (int. dimenions)

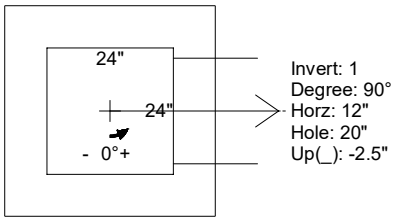

INSIDE WALL DIMENSIONS

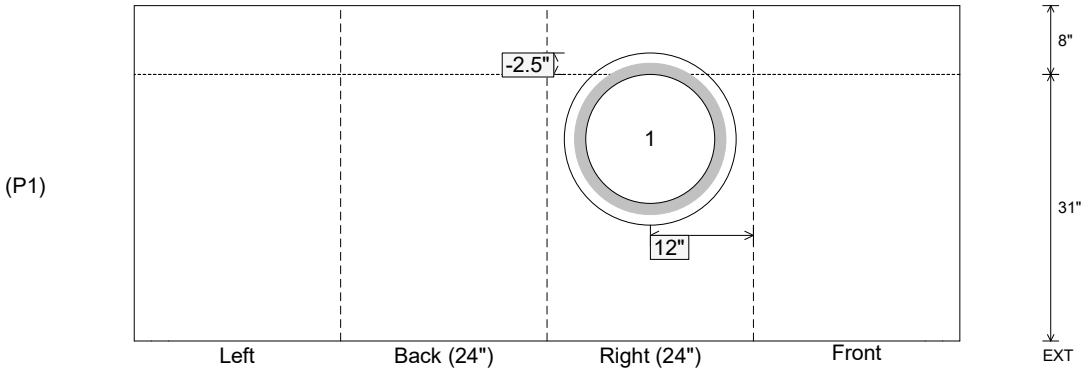

Coating (Int): Coating (Ext):	Seam Up: Flat Seam Dn: n/a	Wall Thickness: 8" Floor Height: 8"	Height (Int): 31" Height (Ext): 39"	Weight (Net): 3527 lb Volume (Net): 0.9cu.yd

Job Name: 25-2952 - KYTC Jefferson Co Call 106 (251315) Job Location: Indiana, KY Contractor: Louisville Paving and Construction	Plant: 100 6/12/2026 3:12:23 PM	Tech: J. Horsley - A PC: J. Jarvis	

Structure ID: 19

P2 BX024024-08LD08-14 CB FLAT TOP 8"W (HOE KY-210) F/F

P3) 19.5" - CASTING (cast in) - 2.75"	0 lb
P2) 24" x 24" - CB FLAT TOP 8"W (HOE KY-210) F/F - 8"	943 lb
P1) 24" x 24" - BOX BASE 8inW, 8inF, Variable Ht F/n - 31"	3527 lb
1) This Structure Includes a Cast-in Item - HOE KY-210 Frame (Supplied By Others)	0 lb
1) 24" x 24" - Conseal CS-102 1.00"	0 lb
1) Hole - 20	0 lb
Structure Total:	4470 lb

Structure Notes:

** KYTC STATE PROJECT **

1. PER KYTC DBI TYPE 14 / ASTM C-913 SPECS
2. CONCRETE: 4,000 PSI AT 28 DAYS
3. REINFORCEMENT: #5 BAR @ 6" C.C. E.W. (GRADE 60) - 2" MIN. REBAR CLEARANCE (TYP)
4. HOE KY-210 FRAME & GRATE SUPPLIED BY OTHERS - FRAME TO BE CAST INTO FLAT LID
5. LIFTERS: 2 EA. 5CA14 CONAC A-ANCHORS FOR PLANT & FIELD HANDLING - INSTALLED AS SHOWN
6. TOP SURFACE TO RECEIVE LIGHT BRUSH FINISH

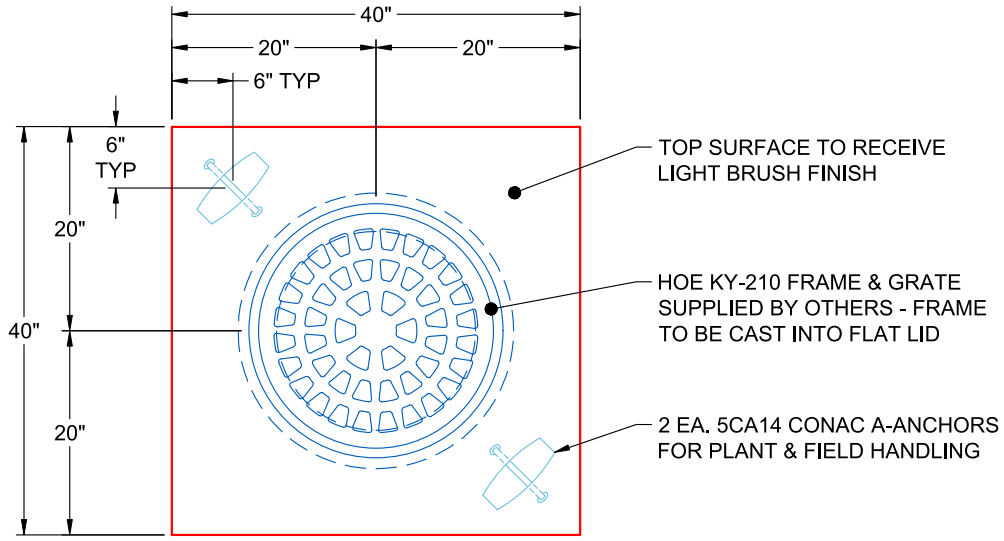

PLAN VIEW
(RIGHT SIDE UP)

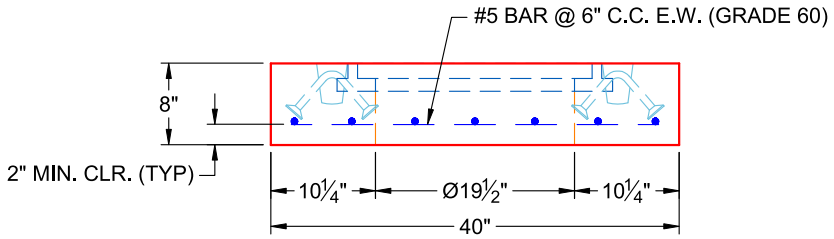

FRONT VIEW
(RIGHT SIDE UP)

Coating (Int): Coating (Ext):	Seam Up: Flat Seam Dn: Flat	Wall Thickness: 8"	Height (Ext): 8"	Weight (Net): 943 lb Volume (Net): 0.24cu.yd

Job Number:

25-2952

Job Name:

KYTC Jefferson Co Call 106 (251315)

Structure:

19

Note:

HOE KY-210 Frame Supplied By Others To Be Cast Into Flat Lid

Job Name: 25-2952 - KYTC Jefferson Co Call 106 (251315) Job Location: Indiana, KY Contractor: Louisville Paving and Construction	Plant: 100 6/12/2026 3:09:41 PM	Tech: J. Horsley - A PC: J. Jarvis	

Structure ID: 20

P1 BX2424-08BAVF BOX BASE 8inW, 8inF, Variable Ht F/n

P3) 19.5" - CASTING (cast in) - 2.75"	0 lb
P2) 24" x 24" - CB FLAT TOP 8"W (HOE KY-210) F/F - 8"	943 lb
P1) 24" x 24" - BOX BASE 8inW, 8inF, Variable Ht F/n - 31"	3316 lb
1) This Structure Includes a Cast-in Item - HOE KY-210 Frame (Supplied By Others)	0 lb
1) 24" x 24" - Conseal CS-102 1.00"	0 lb
2) Hole - 20	0 lb
Structure Total:	4259 lb

Structure Notes:

** KYTC STATE PROJECT **

1. PER KYTC DBI TYPE 14 / ASTM C-913 SPECS
2. CONCRETE: 4,000 PSI AT 28 DAYS
3. REINFORCEMENT: #5 BAR @ 12" C.C. E.W. (GRADE 60) - 2" MIN. REBAR CLEARANCE (TYP)
4. HOE KY-210 FRAME & GRATE SUPPLIED BY OTHERS - FRAME TO BE CAST INTO FLAT LID

Rim: 563.4' Rim to Invert: 3.25' Slack: 0" Sump: 0" Step Position:

Position	Elev	Angle	Ext. (cw)	Pipe	Pipe OD	Connector	Hole	Horz Size	Up (_)	Offset
Invert 1	560.15'	90°	20"	15" HDPE	17.6"	Hole 20	20"	20"	-2.5"	0"
Invert 2	560.15'	270°	20"	15" HDPE	17.6"	Hole 20	20"	20"	-2.5"	0"
Invert 3										
Invert 4										
Invert 5										
Invert 6										
Invert 7										
Invert 8										

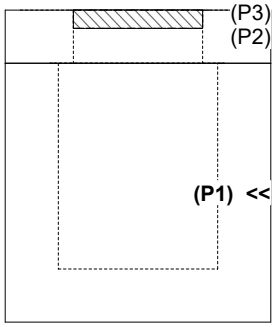

RIGHT-SIDE UP VIEW (int. dimensions)

UPSIDE-DOWN VIEW (int. dimenions)

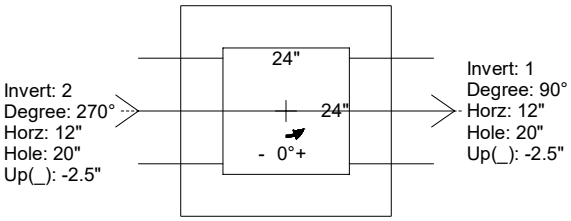

INSIDE WALL DIMENSIONS

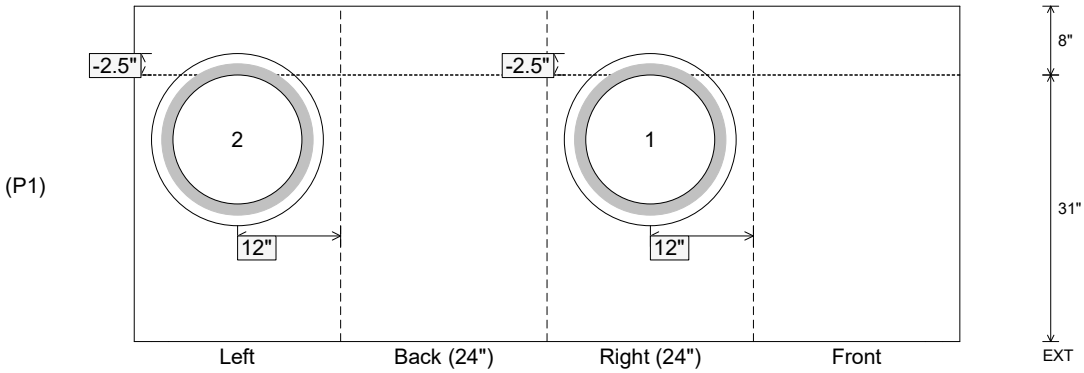

Coating (Int): Coating (Ext):	Seam Up: Flat Seam Dn: n/a	Wall Thickness: 8" Floor Height: 8"	Height (Int): 31" Height (Ext): 39"	Weight (Net): 3316 lb Volume (Net): 0.85cu.yd

Job Name: 25-2952 - KYTC Jefferson Co Call 106 (251315) Job Location: Indiana, KY Contractor: Louisville Paving and Construction	Plant: 100 6/12/2026 3:12:21 PM	Tech: J. Horsley - A PC: J. Jarvis	

Structure ID: 14

P2 BX036036-08LD08S CB FLAT TOP 8"W SPEC. (KY-328 CAST IN) F/F

P3) 36" x 36" - CASTING (cast in) - 3"	0 lb
P2) 36" x 36" - CB FLAT TOP 8"W SPEC. (KY-328 CAST IN) F/F - 8"	996 lb
P1) 36" x 36" - BOX BASE 8inW, 8inF, Variable Ht F/n - 40"	5461 lb
1) This Structure Includes a Cast-in Item - HOE KY-328 Frame (Supplied by Others)	0 lb
2) 36" x 36" - Conseal CS-102 1.00"	0 lb
2) Hole - 32	0 lb
Structure Total:	6457 lb

Structure Notes:

** KYTC STATE PROJECT **

1. PER KYTC DBI TYPE 3 / ASTM C-913 SPECS
2. CONCRETE: 4,000 PSI AT 28 DAYS
3. REINFORCEMENT: #5 BAR @ 6" C.C. E.W. (GRADE 60) - 2" MIN. REBAR CLEARANCE (TYP)
4. HOE KY-328 FRAME & GRATES SUPPLIED BY OTHERS - FRAME TO BE CAST INTO FLAT LID
5. LIFTERS: 2 EA. CONAC A-W ANCHORS FOR PLANT & FIELD HANDLING - INSTALLED AS SHOWN
   - IF NEEDED, MODIFY A-W RRF CUP TO PREVENT INTERFERENCE WITH CAST-IN FRAME
6. TOP SURFACE TO RECEIVE LIGHT BRUSH FINISH

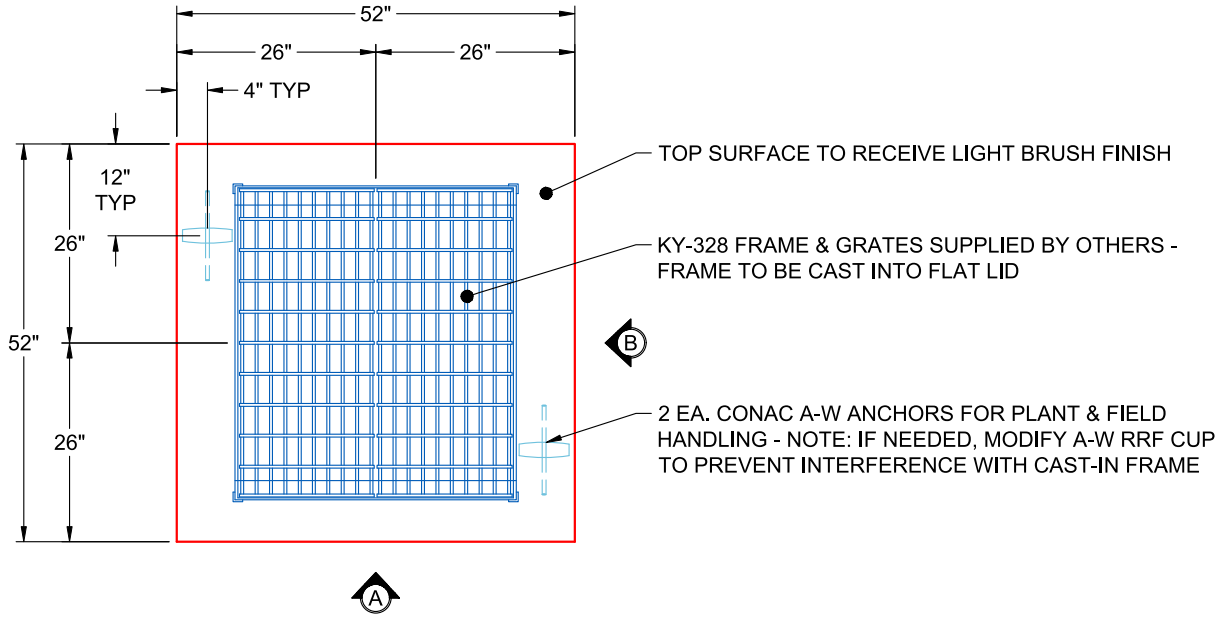

PLAN VIEW
(RIGHT SIDE UP)

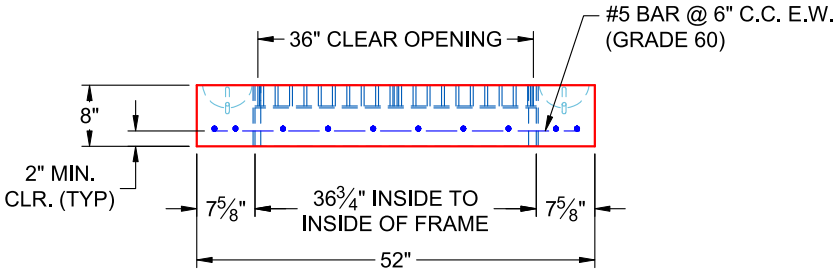

VIEW A
(RIGHT SIDE UP)

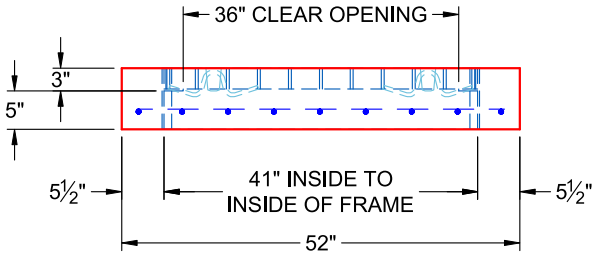

VIEW B
(RIGHT SIDE UP)

Coating (Int): Coating (Ext):	Seam Up: Flat Seam Dn: Flat	Wall Thickness: 8"	Height (Ext): 8"	Weight (Net): 996 lb Volume (Net): 0.25cu.yd

Job Number:

25-2952

Job Name:

KYTC Jefferson Co Call 106 (251315)

Structure:

14

Note:

HOE KY-328 Frame Supplied By Others To Be Cast Into Flat Lid

Job Name: 26-1899 - Gateway 65 Industrial Road Job Location: Franklin, KY Contractor: RD Sitework LLC	Plant: 100 6/4/2026 4:39:20 PM	Tech: Jared - F PC: E. Bardley	

Structure ID: 49 ST-DCI

P2 BX036084-08LD08SP **CB FLAT TOP 8"W SPEC. (2 - 24x36 HOLES) F/F**

P3) 24" x 36" - CASTING HEIGHT - 6"	0 lb
P2) 36" x 84" - CB FLAT TOP 8"W SPEC. (2 - 24x36 HOLES) F/F - 8"	2911 lb
P1) 36" x 84" - BOX BASE 8inW, 8inF, Variable Ht F/n - 37"	9991 lb
1) CASTING - HOE 525 DBL SET FLAT GRATE (F/G/H)	442 lb
1) 36" x 84" - Conseal CS-102 1.00"	0 lb
1) 24" x 36" - Conseal CS-102 1.00"	0 lb
1) Hole - 22	0 lb
Structure Total:	13344 lb

Structure Notes: .
1. PER ASTM C913 SPECIFICATIONS.
2. CONCRETE = 4,000 PSI AT 28 DAYS.
3. NO STEPS AND NO INVERT CHANNEL.
4. CASTING BY ICAST (HOE 525 DBL SET FLAT GRATE (F/G/H)).

.
REINFORCING PER ASTM A615 (GRADE 60).
- TOP SLAB (As .62) #5 BARS AT 6" C.C.E.W.
- WALLS (As .47) #5 BARS AT 8" C.C.E.W.
- FLOOR (As .47) #5 BARS AT 8" C.C.E.W.

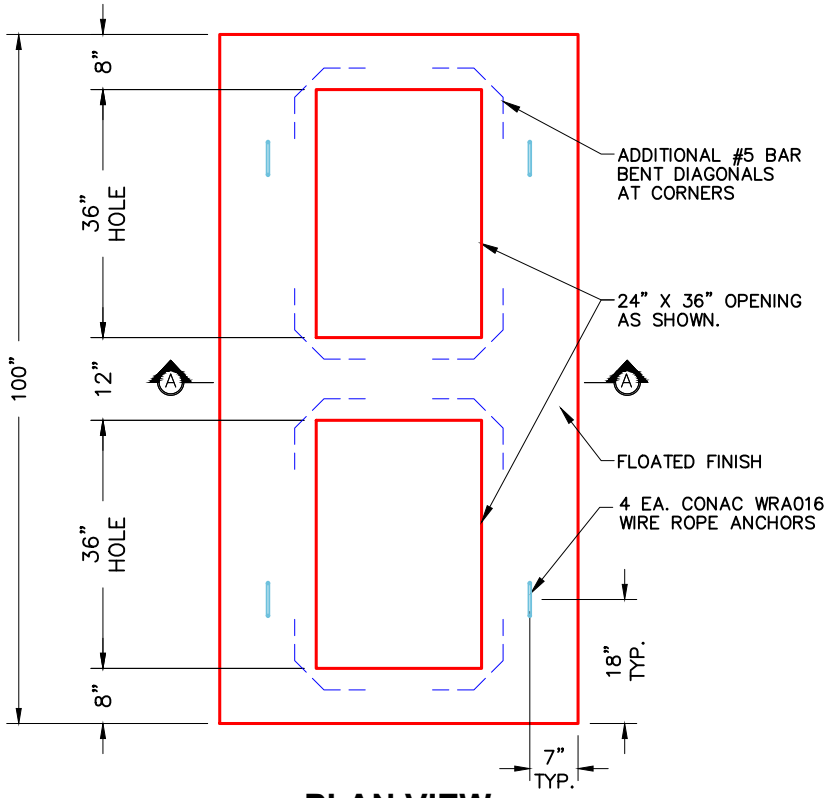

PLAN VIEW

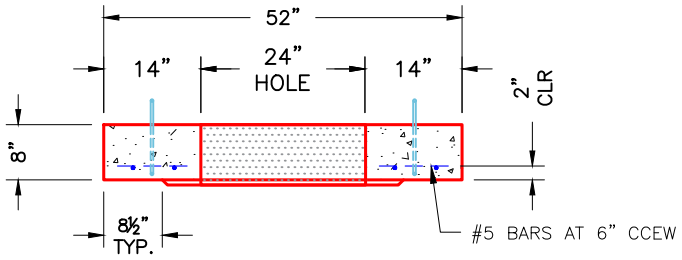

SECTION A-A

NOTES:

1. MANUFACTURED TO ASTM C-913 (LATEST REVISION).
2. CONCRETE: 4,000 PSI AT 28 DAYS.
3. REINFORCING: #5 BAR @ 6" O.C. E.W. (GRADE 60).

Coating (Int): Coating (Ext):	Seam Up: Flat Seam Dn: Flat	Wall Thickness: 8"	Height (Ext): 8"	Weight (Net): 2911 lb Volume (Net): 0.74cu.yd