Job Name: 25-3579 - Lebanon Rd Clarks Run Trunk Sewer Ph 2 Job Location: Danville, KY Contractor: Hubert Excavating & Contracting	Plant: 100 6/7/2026 1:26:07 PM	Tech: J. Horsley PC: C. Goff	

Structure ID: MH A14

P3 MH048CN42SP ECC CONE w/ 24" HOLE, w/Coating F/G

P5)	24" - CASTING HEIGHT - 7"	0 lb
P4)	24" - GRADE RING F/F - 6"	405 lb
P3)	48" - ECC CONE w/ 24" HOLE, w/Coating F/G - 42"	3116 lb
P2)	60" - MH Trans. Slab - 48" Hole ECC, w/Coating T/G - 13"	1928 lb
P1)	60" - MH BASE w/FLANGE (08F/07EF) w/Coating T/n - 72"	10426 lb
1)	JOINT WRAP - 12" WD x 060" MAC WRAP	0 lb
1)	60" - MH INVERT CHANNEL - FULL HEIGHT	2692 lb
1)	SPECIAL EXTERNAL COATING - Carboline 300M	0 lb
1)	JOINT WRAP - 12" WD x 048" MAC WRAP	0 lb
1)	SECONDARY POUR - Extended Flange	0 lb
1)	60" - Conseal CS-102 1.00" (Double)	0 lb
1)	48" - Conseal CS-102 1.00" (Double)	0 lb
2)	24" - Conseal CS-102 1.00" (Double)	0 lb
2)	A-Lok - 1040	2 lb
1)	PSX - 12-08 NYLO	8 lb
10)	MH Step ML-10-TDS-NCR - 10"	0 lb
220.64 SqFt)	Carboline Bitumastic 300M [EXT]	0 lb
	Structure Total:	18577 lb

Structure Notes:

1. PER ASTM C-478 SPECIFICATIONS
2. CONCRETE: 4,000 PSI AT 28 DAYS
3. REINFORCEMENT: PER ASTM A615
4. CARBOLINE 300M EXTERIOR COATING REQUIRED
5. STEPS REQUIRED
6. HOE MC-375 FRAME & COVER "SANITARY" SUPPLIED BY OTHERS

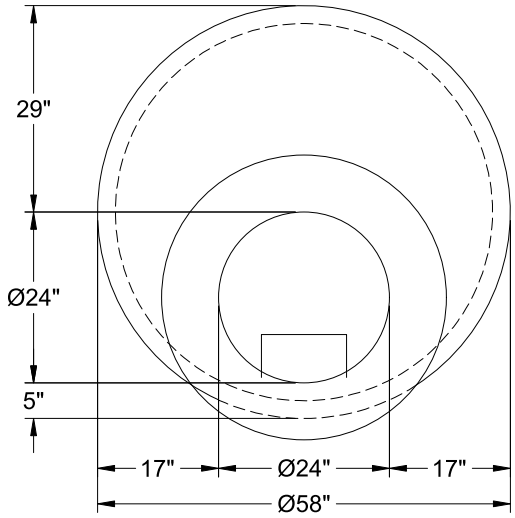

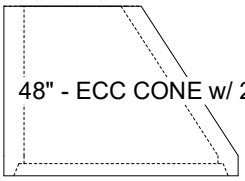

48" - ECC CONE w/ 24" HOLE, w/Coating F/G - 42" - (P3)

Coating (Int): Coating (Ext): Carboline Bitumastic 300M	Seam Up: Flat Seam Dn: Groove	Wall Thickness: 5"	Height (Ext): 42"	Weight (Net): 3116 lb Volume (Net): 0.8cu.yd

Job Number:

25-3579

Job Name:

Lebanon Rd Clarks Run Trunk Sewer Ph 2

Structure:

MH A14

Note:

This Structure Is To Receive An External Coating of Carboline 300M (Supplied By iCast)