Job Name: 26-3051 ADS Aiken Ridge Ph.2 Job Location: Louisville, KY Contractor: ADS Advanced Drainage Systems, Inc.	Plant: Beaver Dam 7/27/2026 1:53:04 PM	Tech: S. Felletter PC: T. Ryan	

Structure ID: WQU2

P3 MH120RS96 MH RISER T/G

P7) 24" - CASTING HEIGHT - 7"	0 lb
P6) 24" - GRADE RING F/F - 3"	202 lb
P5) 120" - MH FLAT LID w/24in CON Hole F/G - 18"	16678 lb
P4) 120" - MH RISER T/G - 48"	18234 lb
P3) 120" - MH RISER T/G - 96"	35438 lb
P2) 120" - MH RISER T/G - 96"	36468 lb
P1) 120" - MH BASE T/n - 24"	25064 lb
1) JOINT WRAP - 0.065"x6"x50' CONSEAL CS212	0 lb
1) JOINT WRAP PRIMER - CONSEAL CS-75 (1 gal.)	0 lb
1) ASSEMBLY REQUIRED - BRACKETS ONLY	0 lb
1) CASTING - HOE MC-420 F/C Storm LOU-MSD	340 lb
4) 120" - Conseal CS-102 1.00"	0 lb
2) 24" - Conseal CS-102 1.00"	0 lb
2) Hole - 24	0 lb

Structure Total:	132424 lb

Rim: 643.5' Rim to Invert: 10.85' Slack: 0.2" Sump: 162" Step Position:

Structure Notes: .
1. PER ASTM C478 SPECIFICATIONS.
2. CONCRETE = 4,000 PSI AT 28 DAYS.
3. CASTING BY ICAST (HOE MC-420 F/C LOU-MSD "STORM").
4. LIFTING ANCHORS TO BE INSTALLED ON THE OUTSIDE OF THE STRUCTURE.
5. ASSEMBLY REQUIRED - BRACKETS ONLY.
.
REINFORCING PER ASTM A615 (GRADE 60).
- TOP SLAB (As .62) #5 BARS AT 6" C.C.E.W.
- RISER/WALLS (As .36)
- FLOOR (As .47) #5 BARS AT 8" C.C.E.W.

Position	Elev	Angle	Ext. (cw)	Pipe	Pipe OD	Connector	Hole	Horz Size	Up (_)	Offset
Invert 1	632.65'	0°	37.754"	18" HDPE	21.2"	Hole 24	24"	30.947"	33"	36"
Invert 2	632.65'	0°	-37.754"	18" HDPE	21.2"	Hole 24	24"	30.947"	33"	-36"
Invert 3										
Invert 4										
Invert 5										
Invert 6										
Invert 7										
Invert 8										

RIGHT-SIDE UP VIEW (int. dimensions)

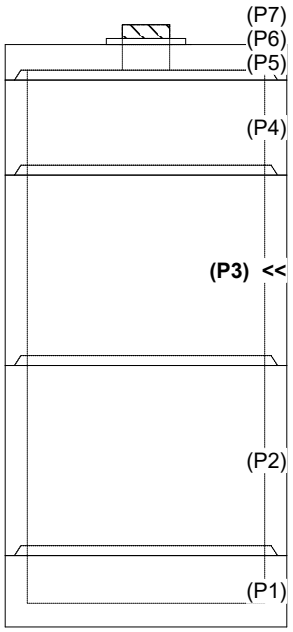

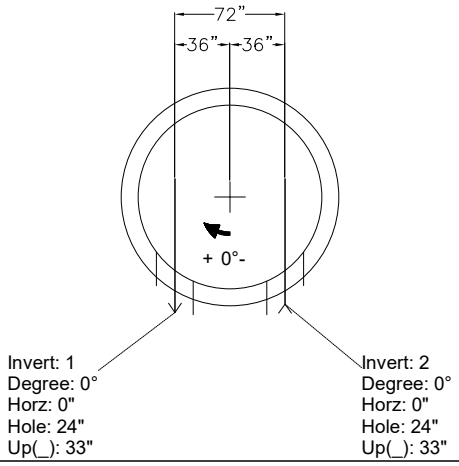

INSIDE WALL DIMENSIONS

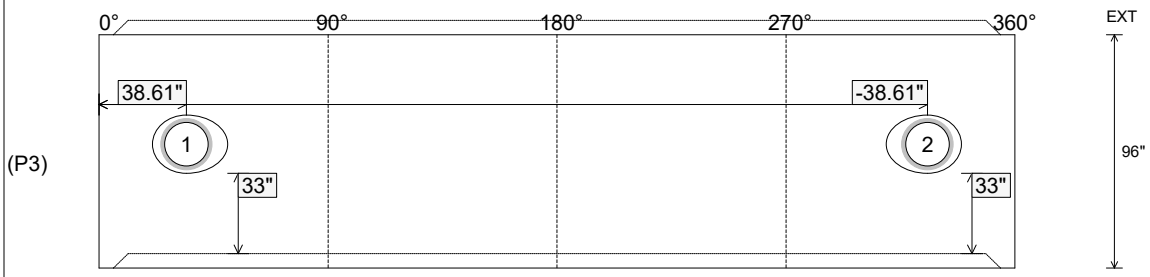

Coating (Int): Coating (Ext):	Seam Up: Tongue Seam Dn: Groove	Wall Thickness: 11" Floor Height: 0"	Height (Int): 96" Height (Ext): 96"	Weight (Net): 35438 lb Volume (Net): 9.05cu.yd

Job Name: 26-3183 ADS Freedom's Way Commons
Job Location: Shelbyville, KY
Contractor: ADS Advanced Drainage Systems, Inc.

Plant: Beaver Dam
8/14/2026 12:26:08 PM

Tech: S. Felletter
PC: T. Ryan

Structure ID: STR-23

P1 MH036BA18 MH BASE T/n

P4) 24" - CASTING HEIGHT - 4"	0 lb
P3) 36" - MH FLAT TOP w/ 24" Ctr. Hole F/F - 6"	538 lb
P2) 36" - MH RISER Custom Ht F/G - 62"	2476 lb
P1) 36" - MH BASE T/n - 18"	1525 lb
1) ASSEMBLY REQUIRED	0 lb
1) JOINT WRAP - 0.065"x6"x50' CONSEAL CS212	0 lb
1) JOINT WRAP PRIMER - CONSEAL CS-75 (1 gal.)	0 lb
1) CASTING - HOE MC-285 F/C Storm	284 lb
2) 36" - Conseal CS-102 1.00" (Double)	0 lb
1) 24" - Conseal CS-102 1.00" (Double)	0 lb
2) Hole - 16	0 lb
Structure Total:	4823 lb

Structure Notes: .
1. PER ASTM C478 SPECIFICATIONS.
2. CONCRETE = 4,000 PSI AT 28 DAYS.
3. CASTING BY ICAST (HOE MC-285 F/C "STORM").
4. LIFTING ANCHORS TO BE INSTALLED ON THE OUTSIDE OF THE STRUCTURE.

.
REINFORCING PER ASTM A615 (GRADE 60).
- TOP SLAB (As .62) #5 BARS AT 6" C.C.E.W.
- RISER/WALLS (As .12)
- FLOOR (As .31) #5 BARS AT 12" C.C.E.W.

Rim: 733.7' Rim to Invert: 2.95' Slack: 0.36" Sump: 54.96" Step Position:

Position	Elev	Angle	Ext. (cw)	Pipe	Pipe OD	Connector	Hole	Horz Size	Up (_)	Offset
Invert 1										
Invert 2										
Invert 3										
Invert 4										
Invert 5										
Invert 6										
Invert 7										
Invert 8										

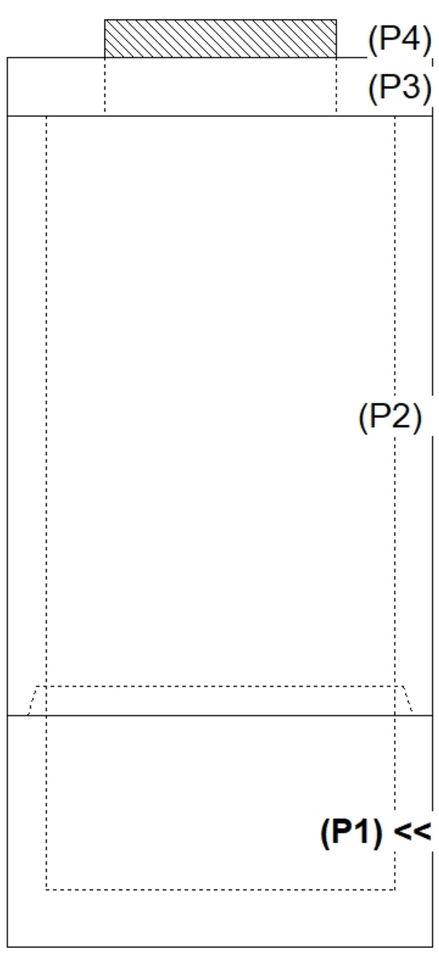

RIGHT-SIDE UP VIEW (int. dimensions)

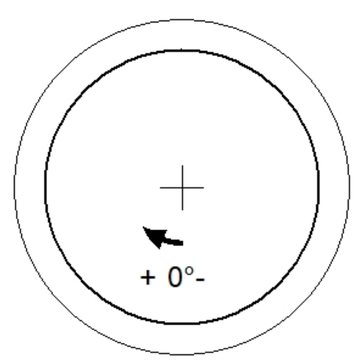

UPSIDE-DOWN VIEW (int. dimenions)

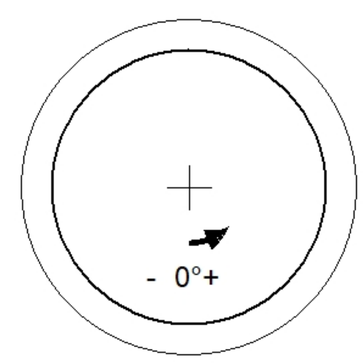

INSIDE WALL DIMENSIONS

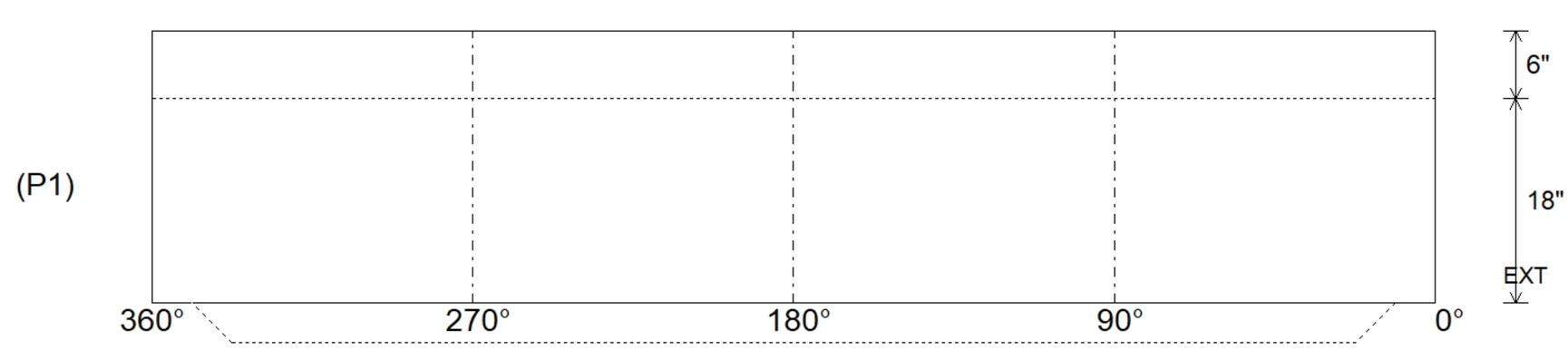

Coating (Int): Coating (Ext):	Seam Up: Tongue Seam Dn: n/a	Wall Thickness: 4" Floor Height: 6"	Height (Int): 18" Height (Ext): 24"	Weight (Net): 1525 lb Volume (Net): 0.39cu.yd

Job Name: 26-1814 - Brownsville Sewer System Additions Job Location: Cave City, KY Contractor: Luttrell & Sons, LLC	Plant: 100 7/31/2026 1:28:15 PM	Tech: Jared - F PC: A. Chambers	

Structure ID: 108+25 ARV

P1 MH048DHVF **MH DH RISER Custom Ht T/F**

P3) 24" - CASTING HEIGHT - 7"	0 lb
P2) 48" - MH FLAT TOP w/ 24" ECC Hole F/G - 12"	1561 lb
P1) 48" - MH DH RISER Custom Ht T/F - 41"	2864 lb
1) CASTING - HOE MC-375 F/C Sanitary	271 lb
1) 48" - Conseal CS-102 1.00" (Double)	0 lb
1) 24" - Conseal CS-102 1.00" (Double)	0 lb
1) Hole - 0	0 lb
Structure Total:	4696 lb

Structure Notes: .
1. PER ASTM C478 SPECIFICATIONS.
2. CONCRETE = 4,000 PSI AT 28 DAYS.
3. NO STEPS.
4. CASTING SUPPLIED BY ICAST (HOE MC-375 F/C "SANITARY")
.
REINFORCING PER ASTM A615 (GRADE 60).
- TOP SLAB = H20 LOADING.
- RISER/WALLS (As .12)

Rim: 5' Rim to Invert: 5' Slack: 0" Sump: 0" Step Position:

Position	Elev	Angle	Ext. (cw)	Pipe	Pipe OD	Connector	Hole	Horz Size	Up (_)	Offset
Invert 1	0'	0°	0"	0" No Hole	0.01"	Hole 0	0"	0"	0"	0"
Invert 2										
Invert 3										
Invert 4										
Invert 5										
Invert 6										
Invert 7										
Invert 8										

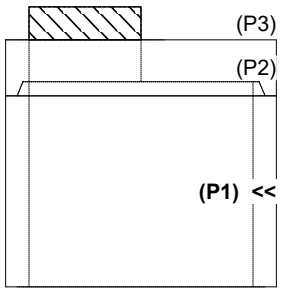

RIGHT-SIDE UP VIEW (int. dimensions)

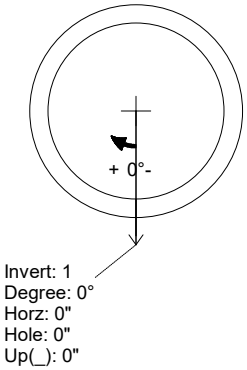

UPSIDE-DOWN VIEW (int. dimenions)

INSIDE WALL DIMENSIONS

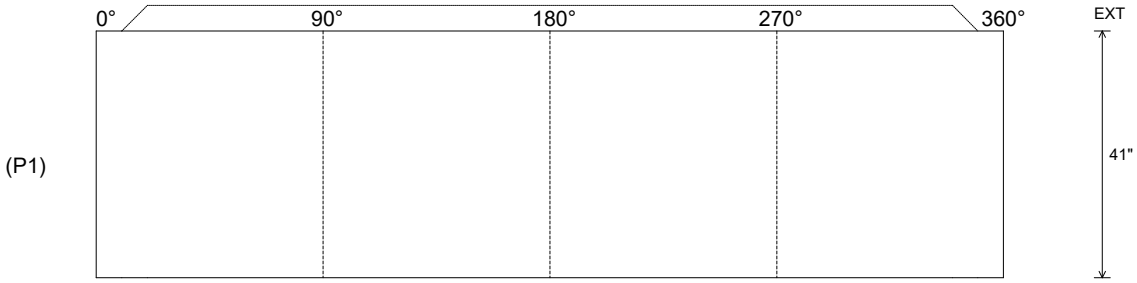

Coating (Int): Coating (Ext):	Seam Up: Tongue Seam Dn: Flat	Wall Thickness: 5" Floor Height: 0"	Height (Int): 41" Height (Ext): 41"	Weight (Net): 2864 lb Volume (Net): 0.73cu.yd

Job Name: 26-1814 - Brownsville Sewer System Additions Job Location: Cave City, KY Contractor: Luttrell & Sons, LLC	Plant: 100 7/31/2026 1:28:15 PM	Tech: Jared - F PC: A. Chambers	

Structure ID: 101+85 ARV

P1 MH048DHVF **MH DH RISER Custom Ht T/F**

P3) 24" - CASTING HEIGHT - 7"	0 lb
P2) 48" - MH FLAT TOP w/ 24" ECC Hole F/G - 12"	1561 lb
P1) 48" - MH DH RISER Custom Ht T/F - 41"	2864 lb
1) CASTING - HOE MC-375 F/C Sanitary	271 lb
1) 48" - Conseal CS-102 1.00" (Double)	0 lb
1) 24" - Conseal CS-102 1.00" (Double)	0 lb
1) Hole - 0	0 lb
Structure Total:	4696 lb

Structure Notes: .
1. PER ASTM C478 SPECIFICATIONS.
2. CONCRETE = 4,000 PSI AT 28 DAYS.
3. NO STEPS.
4. CASTING SUPPLIED BY ICAST (HOE MC-375 F/C "SANITARY")
.
REINFORCING PER ASTM A615 (GRADE 60).
- TOP SLAB = H20 LOADING.
- RISER/WALLS (As .12)

Rim: 5' Rim to Invert: 5' Slack: 0" Sump: 0" Step Position:

Position	Elev	Angle	Ext. (cw)	Pipe	Pipe OD	Connector	Hole	Horz Size	Up (_)	Offset
Invert 1	0'	0°	0"	0" No Hole	0.01"	Hole 0	0"	0"	0"	0"
Invert 2										
Invert 3										
Invert 4										
Invert 5										
Invert 6										
Invert 7										
Invert 8										

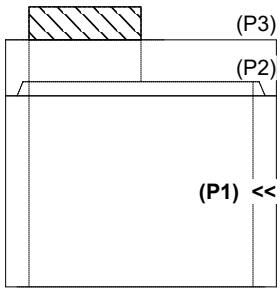

RIGHT-SIDE UP VIEW (int. dimensions)

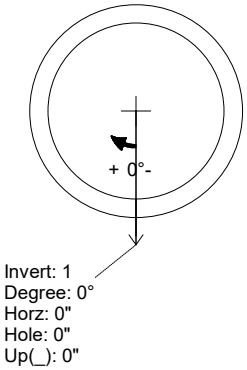

UPSIDE-DOWN VIEW (int. dimenions)

INSIDE WALL DIMENSIONS

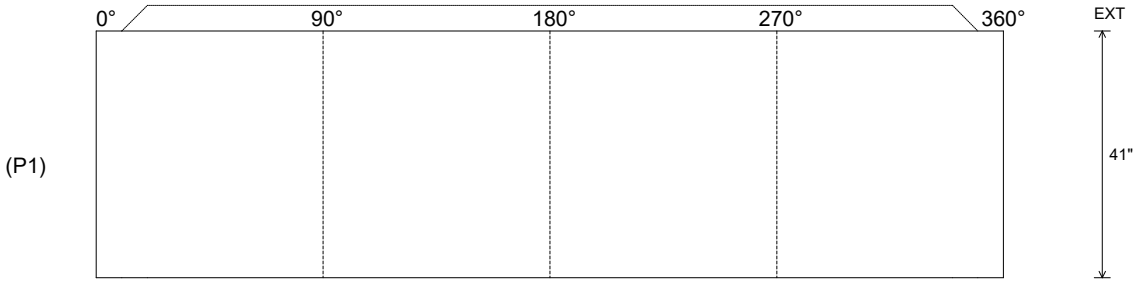

Coating (Int): Coating (Ext):	Seam Up: Tongue Seam Dn: Flat	Wall Thickness: 5" Floor Height: 0"	Height (Int): 41" Height (Ext): 41"	Weight (Net): 2864 lb Volume (Net): 0.73cu.yd

Job Name: 26-1814 - Brownsville Sewer System Additions Job Location: Cave City, KY Contractor: Luttrell & Sons, LLC	Plant: 100 7/31/2026 1:28:14 PM	Tech: Jared - F PC: A. Chambers	

Structure ID: 92+05 ARV

P1 MH048DHVF **MH DH RISER Custom Ht T/F**

P3) 24" - CASTING HEIGHT - 7"	0 lb
P2) 48" - MH FLAT TOP w/ 24" ECC Hole F/G - 12"	1561 lb
P1) 48" - MH DH RISER Custom Ht T/F - 41"	2864 lb
1) CASTING - HOE MC-375 F/C Sanitary	271 lb
1) 48" - Conseal CS-102 1.00" (Double)	0 lb
1) 24" - Conseal CS-102 1.00" (Double)	0 lb
1) Hole - 0	0 lb
Structure Total:	4696 lb

Structure Notes: .
1. PER ASTM C478 SPECIFICATIONS.
2. CONCRETE = 4,000 PSI AT 28 DAYS.
3. NO STEPS.
4. CASTING SUPPLIED BY ICAST (HOE MC-375 F/C "SANITARY")
.
REINFORCING PER ASTM A615 (GRADE 60).
- TOP SLAB = H20 LOADING.
- RISER/WALLS (As .12)

Rim: 5' Rim to Invert: 5' Slack: 0" Sump: 0" Step Position:

Position	Elev	Angle	Ext. (cw)	Pipe	Pipe OD	Connector	Hole	Horz Size	Up (_)	Offset
Invert 1	0'	0°	0"	0" No Hole	0.01"	Hole 0	0"	0"	0"	0"
Invert 2										
Invert 3										
Invert 4										
Invert 5										
Invert 6										
Invert 7										
Invert 8										

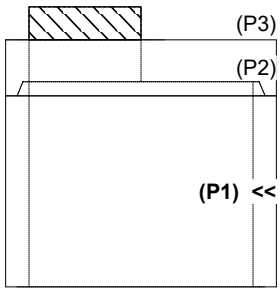

RIGHT-SIDE UP VIEW (int. dimensions)

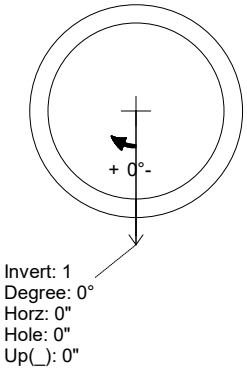

UPSIDE-DOWN VIEW (int. dimenions)

INSIDE WALL DIMENSIONS

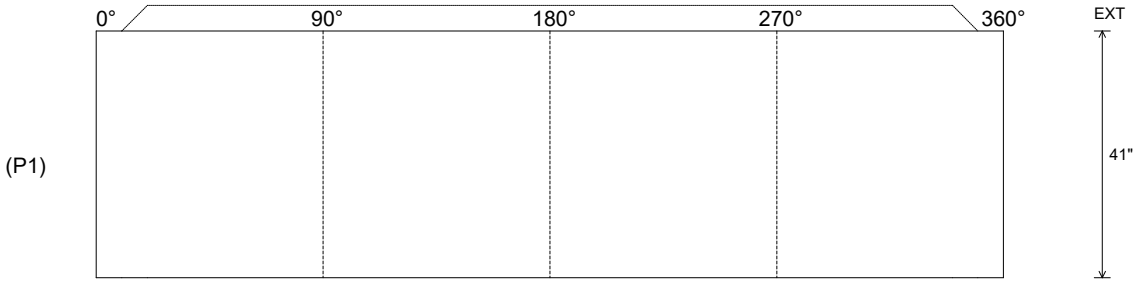

Coating (Int): Coating (Ext):	Seam Up: Tongue Seam Dn: Flat	Wall Thickness: 5" Floor Height: 0"	Height (Int): 41" Height (Ext): 41"	Weight (Net): 2864 lb Volume (Net): 0.73cu.yd

Job Name: 26-1814 - Brownsville Sewer System Additions Job Location: Cave City, KY Contractor: Luttrell & Sons, LLC	Plant: 100 7/31/2026 1:28:14 PM	Tech: Jared - F PC: A. Chambers	

Structure ID: 81+87 ARV

P1 MH048DHVF **MH DH RISER Custom Ht T/F**

P3) 24" - CASTING HEIGHT - 7"	0 lb
P2) 48" - MH FLAT TOP w/ 24" ECC Hole F/G - 12"	1561 lb
P1) 48" - MH DH RISER Custom Ht T/F - 41"	2864 lb
1) CASTING - HOE MC-375 F/C Sanitary	271 lb
1) 48" - Conseal CS-102 1.00" (Double)	0 lb
1) 24" - Conseal CS-102 1.00" (Double)	0 lb
1) Hole - 0	0 lb
Structure Total:	4696 lb

Structure Notes: .
1. PER ASTM C478 SPECIFICATIONS.
2. CONCRETE = 4,000 PSI AT 28 DAYS.
3. NO STEPS.
4. CASTING SUPPLIED BY ICAST (HOE MC-375 F/C "SANITARY")

.
REINFORCING PER ASTM A615 (GRADE 60).
- TOP SLAB = H20 LOADING.
- RISER/WALLS (As .12)

Rim: 5' Rim to Invert: 5' Slack: 0" Sump: 0" Step Position:

Position	Elev	Angle	Ext. (cw)	Pipe	Pipe OD	Connector	Hole	Horz Size	Up (_)	Offset
Invert 1	0'	0°	0"	0" No Hole	0.01"	Hole 0	0"	0"	0"	0"
Invert 2										
Invert 3										
Invert 4										
Invert 5										
Invert 6										
Invert 7										
Invert 8										

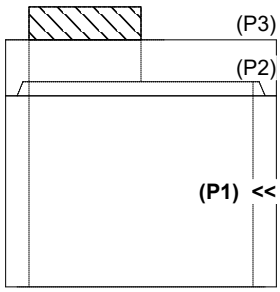

RIGHT-SIDE UP VIEW (int. dimensions)

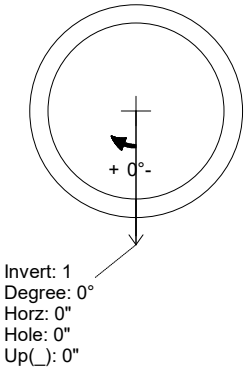

UPSIDE-DOWN VIEW (int. dimenions)

INSIDE WALL DIMENSIONS

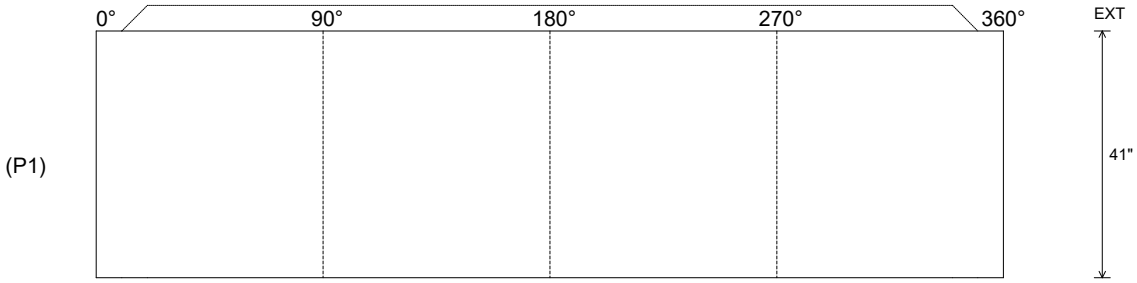

Coating (Int): Coating (Ext):	Seam Up: Tongue Seam Dn: Flat	Wall Thickness: 5" Floor Height: 0"	Height (Int): 41" Height (Ext): 41"	Weight (Net): 2864 lb Volume (Net): 0.73cu.yd

Job Name: 26-1814 - Brownsville Sewer System Additions Job Location: Cave City, KY Contractor: Luttrell & Sons, LLC	Plant: 100 7/31/2026 1:28:13 PM	Tech: Jared - F PC: A. Chambers	

Structure ID: 71+45 ARV

P1 MH048DHVF **MH DH RISER Custom Ht T/F**

P3) 24" - CASTING HEIGHT - 7"	0 lb
P2) 48" - MH FLAT TOP w/ 24" ECC Hole F/G - 12"	1561 lb
P1) 48" - MH DH RISER Custom Ht T/F - 41"	2864 lb
1) CASTING - HOE MC-375 F/C Sanitary	271 lb
1) 48" - Conseal CS-102 1.00" (Double)	0 lb
1) 24" - Conseal CS-102 1.00" (Double)	0 lb
1) Hole - 0	0 lb
Structure Total:	4696 lb

Structure Notes: .
1. PER ASTM C478 SPECIFICATIONS.
2. CONCRETE = 4,000 PSI AT 28 DAYS.
3. NO STEPS.
4. CASTING SUPPLIED BY ICAST (HOE MC-375 F/C "SANITARY")
.
REINFORCING PER ASTM A615 (GRADE 60).
- TOP SLAB = H20 LOADING.
- RISER/WALLS (As .12)

Rim: 5' Rim to Invert: 5' Slack: 0" Sump: 0" Step Position:

Position	Elev	Angle	Ext. (cw)	Pipe	Pipe OD	Connector	Hole	Horz Size	Up (_)	Offset
Invert 1	0'	0°	0"	0" No Hole	0.01"	Hole 0	0"	0"	0"	0"
Invert 2										
Invert 3										
Invert 4										
Invert 5										
Invert 6										
Invert 7										
Invert 8										

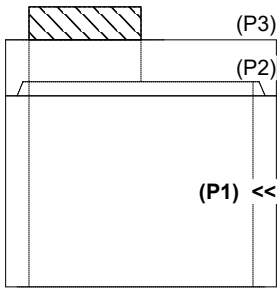

RIGHT-SIDE UP VIEW (int. dimensions)

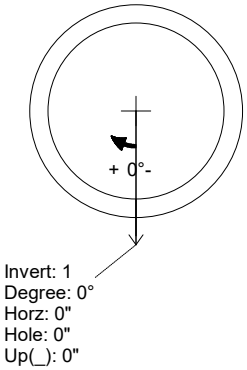

UPSIDE-DOWN VIEW (int. dimenions)

INSIDE WALL DIMENSIONS

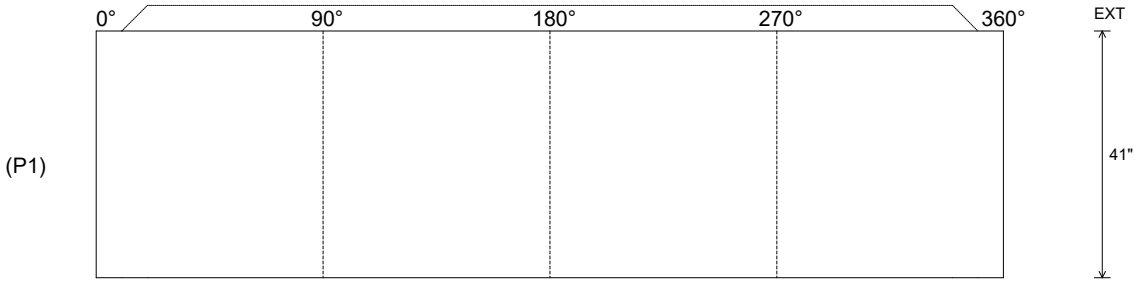

Coating (Int): Coating (Ext):	Seam Up: Tongue Seam Dn: Flat	Wall Thickness: 5" Floor Height: 0"	Height (Int): 41" Height (Ext): 41"	Weight (Net): 2864 lb Volume (Net): 0.73cu.yd

Job Name: 26-1814 - Brownsville Sewer System Additions Job Location: Cave City, KY Contractor: Luttrell & Sons, LLC	Plant: 100 7/31/2026 1:28:12 PM	Tech: Jared - F PC: A. Chambers	

Structure ID: 31+95 ARV

P1 MH048DHVF **MH DH RISER Custom Ht T/F**

P3) 24" - CASTING HEIGHT - 7"	0 lb
P2) 48" - MH FLAT TOP w/ 24" ECC Hole F/G - 12"	1561 lb
P1) 48" - MH DH RISER Custom Ht T/F - 41"	2864 lb
1) CASTING - HOE MC-375 F/C Sanitary	271 lb
1) 48" - Conseal CS-102 1.00" (Double)	0 lb
1) 24" - Conseal CS-102 1.00" (Double)	0 lb
1) Hole - 0	0 lb
Structure Total:	4696 lb

Structure Notes: .
1. PER ASTM C478 SPECIFICATIONS.
2. CONCRETE = 4,000 PSI AT 28 DAYS.
3. NO STEPS.
4. CASTING SUPPLIED BY ICAST (HOE MC-375 F/C "SANITARY")

.
REINFORCING PER ASTM A615 (GRADE 60).
- TOP SLAB = H20 LOADING.
- RISER/WALLS (As .12)

Rim: 5' Rim to Invert: 5' Slack: 0" Sump: 0" Step Position:

Position	Elev	Angle	Ext. (cw)	Pipe	Pipe OD	Connector	Hole	Horz Size	Up (_)	Offset
Invert 1	0'	0°	0"	0" No Hole	0.01"	Hole 0	0"	0"	0"	0"
Invert 2										
Invert 3										
Invert 4										
Invert 5										
Invert 6										
Invert 7										
Invert 8										

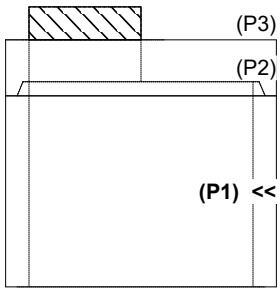

RIGHT-SIDE UP VIEW (int. dimensions)

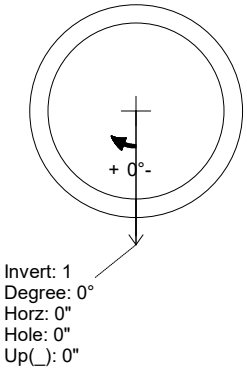

UPSIDE-DOWN VIEW (int. dimenions)

INSIDE WALL DIMENSIONS

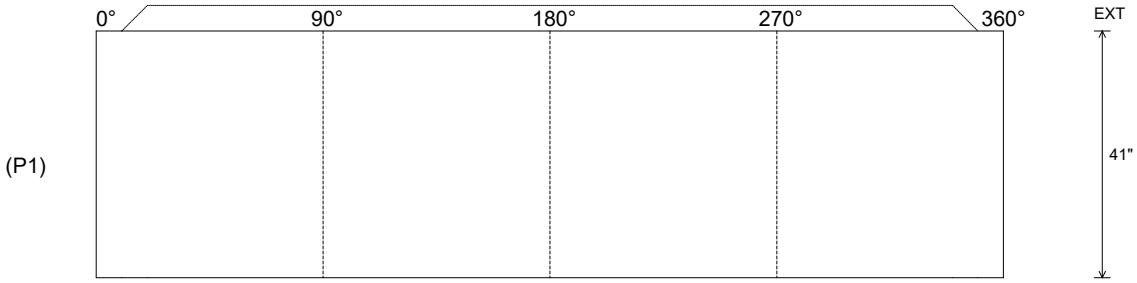

Coating (Int): Coating (Ext):	Seam Up: Tongue Seam Dn: Flat	Wall Thickness: 5" Floor Height: 0"	Height (Int): 41" Height (Ext): 41"	Weight (Net): 2864 lb Volume (Net): 0.73cu.yd

Job Name: 26-1814 - Brownsville Sewer System Additions Job Location: Cave City, KY Contractor: Luttrell & Sons, LLC	Plant: 100 7/31/2026 1:28:12 PM	Tech: Jared - F PC: A. Chambers	

Structure ID: 119+50 ARV

P1 MH048DHVF **MH DH RISER Custom Ht T/F**

P3) 24" - CASTING HEIGHT - 7"	0 lb
P2) 48" - MH FLAT TOP w/ 24" ECC Hole F/G - 12"	1561 lb
P1) 48" - MH DH RISER Custom Ht T/F - 41"	2864 lb
1) CASTING - HOE MC-375 F/C Sanitary	271 lb
1) 48" - Conseal CS-102 1.00" (Double)	0 lb
1) 24" - Conseal CS-102 1.00" (Double)	0 lb
1) Hole - 0	0 lb
Structure Total:	4696 lb

Structure Notes: .
1. PER ASTM C478 SPECIFICATIONS.
2. CONCRETE = 4,000 PSI AT 28 DAYS.
3. NO STEPS.
4. CASTING SUPPLIED BY ICAST (HOE MC-375 F/C "SANITARY")
.
REINFORCING PER ASTM A615 (GRADE 60).
- TOP SLAB = H20 LOADING.
- RISER/WALLS (As .12)

Rim: 5' Rim to Invert: 5' Slack: 0" Sump: 0" Step Position:

Position	Elev	Angle	Ext. (cw)	Pipe	Pipe OD	Connector	Hole	Horz Size	Up (_)	Offset
Invert 1	0'	0°	0"	0" No Hole	0.01"	Hole 0	0"	0"	0"	0"
Invert 2										
Invert 3										
Invert 4										
Invert 5										
Invert 6										
Invert 7										
Invert 8										

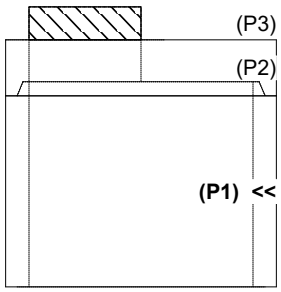

RIGHT-SIDE UP VIEW (int. dimensions)

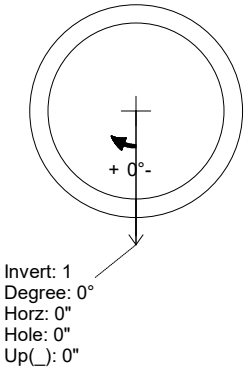

UPSIDE-DOWN VIEW (int. dimenions)

INSIDE WALL DIMENSIONS

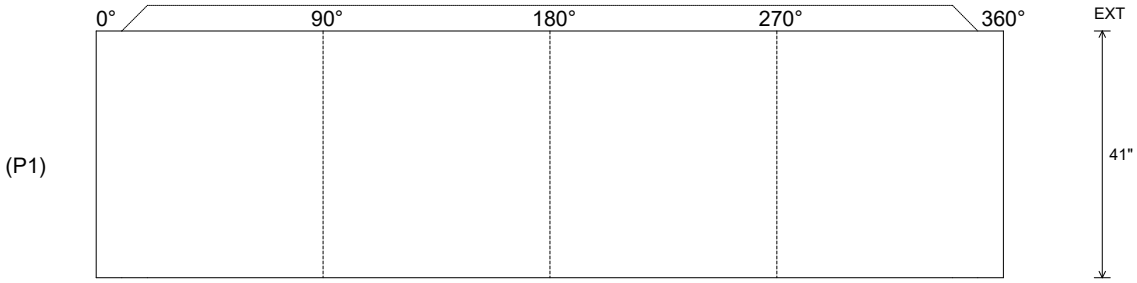

Coating (Int): Coating (Ext):	Seam Up: Tongue Seam Dn: Flat	Wall Thickness: 5" Floor Height: 0"	Height (Int): 41" Height (Ext): 41"	Weight (Net): 2864 lb Volume (Net): 0.73cu.yd

Job Name: 26-1814 - Brownsville Sewer System Additions Job Location: Cave City, KY Contractor: Luttrell & Sons, LLC	Plant: 100 7/31/2026 1:28:11 PM	Tech: Jared - F PC: A. Chambers	

Structure ID: 90+00 ARV

P1 MH048DHVF **MH DH RISER Custom Ht T/F**

P3) 24" - CASTING HEIGHT - 7"	0 lb
P2) 48" - MH FLAT TOP w/ 24" ECC Hole F/G - 12"	1561 lb
P1) 48" - MH DH RISER Custom Ht T/F - 41"	2864 lb
1) CASTING - HOE MC-375 F/C Sanitary	271 lb
1) 48" - Conseal CS-102 1.00" (Double)	0 lb
1) 24" - Conseal CS-102 1.00" (Double)	0 lb
1) Hole - 0	0 lb
Structure Total:	4696 lb

Structure Notes: .
1. PER ASTM C478 SPECIFICATIONS.
2. CONCRETE = 4,000 PSI AT 28 DAYS.
3. NO STEPS.
4. CASTING SUPPLIED BY ICAST (HOE MC-375 F/C "SANITARY")
.
REINFORCING PER ASTM A615 (GRADE 60).
- TOP SLAB = H20 LOADING.
- RISER/WALLS (As .12)

Rim: 5' Rim to Invert: 5' Slack: 0" Sump: 0" Step Position:

Position	Elev	Angle	Ext. (cw)	Pipe	Pipe OD	Connector	Hole	Horz Size	Up (_)	Offset
Invert 1	0'	0°	0"	0" No Hole	0.01"	Hole 0	0"	0"	0"	0"
Invert 2										
Invert 3										
Invert 4										
Invert 5										
Invert 6										
Invert 7										
Invert 8										

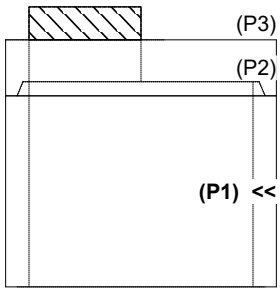

RIGHT-SIDE UP VIEW (int. dimensions)

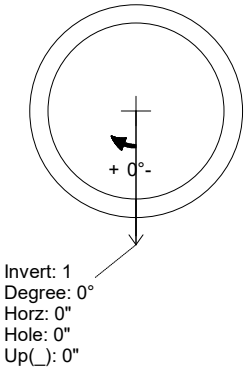

UPSIDE-DOWN VIEW (int. dimenions)

INSIDE WALL DIMENSIONS

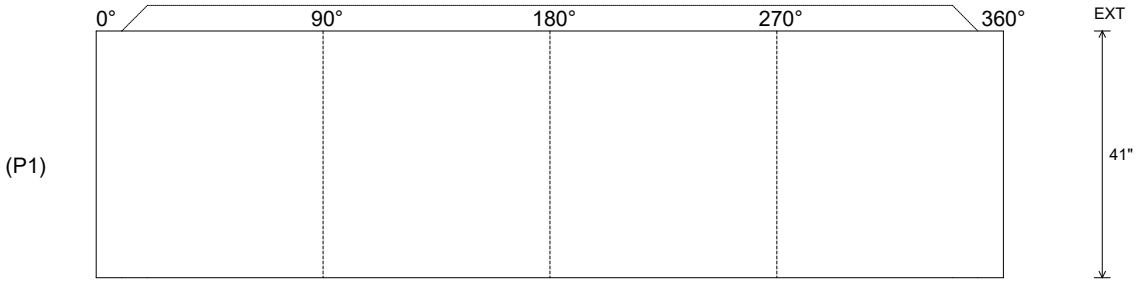

Coating (Int): Coating (Ext):	Seam Up: Tongue Seam Dn: Flat	Wall Thickness: 5" Floor Height: 0"	Height (Int): 41" Height (Ext): 41"	Weight (Net): 2864 lb Volume (Net): 0.73cu.yd

Job Name: 26-2697 - Prestonsburg Yard Vault Job Location: Prestonsburg, KY Contractor: Prestonsburg City Utilities	Plant: 100 6/25/2026 7:04:52 PM	Tech: Jared - F PC: M. Sullivan	

Structure ID: YARD VAULT 2

P3 MH048LD12S **MH FLAT TOP w/30"x30" Hole F/G**

P4) 30" x 30" - HATCH (CAST FLUSH) - 3"	100 lb
P3) 48" - MH FLAT TOP w/30"x30" Hole F/G - 12"	1350 lb
P2) 48" - MH RISER T/F - 48"	3287 lb
P1) 48" - P.I.P. BY OTHERS - BTM SLAB F/n - 0"	0 lb
1) HATCH (Alum.) - HALLIDAY W1S 30"x30"	62 lb
2) 48" - Conseal CS-102 1.00" (Double)	0 lb
1) 30" x 30" - Conseal CS-102 1.00" (Double)	0 lb
2) Hole - 10	0 lb
Structure Total:	4799 lb

Structure Notes: .
1. PER ASTM C478 SPECIFICATIONS.
2. CONCRETE = 4,000 PSI AT 28 DAYS.
3. HATCH SUPPLIED BY I-CAST (HALLIDAY W1S 30"x30")(CAST-IN).
.
REINFORCING PER ASTM A615 (GRADE 60).
- TOP SLAB (As .62) #5 BARS AT 6" C.C.E.W.
- RISER (As .12)

NOTES:
1. PER ASTM C-478 LATEST REVISION
2. CONCRETE: 4,000 PSI AT 28 DAYS.
3. REINFORCEMENT: #5 BAR @ 6" C.C.E.W. PER ASTM A615 (GRADE 60)
5. JOINT SEALANT – 1" CS-102-DOUBLE
6. HATCH: W1S 30"X30" HATCH IS PROVIDED BY ICAST.
7. HATCH TO BE CAST INTO TOP SLAB.

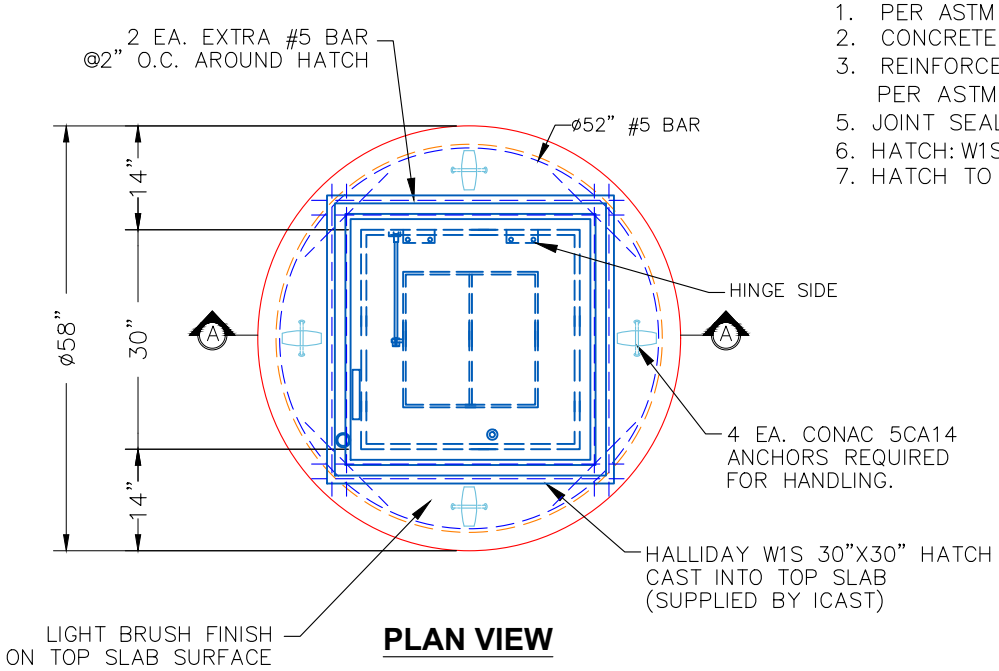

PLAN VIEW

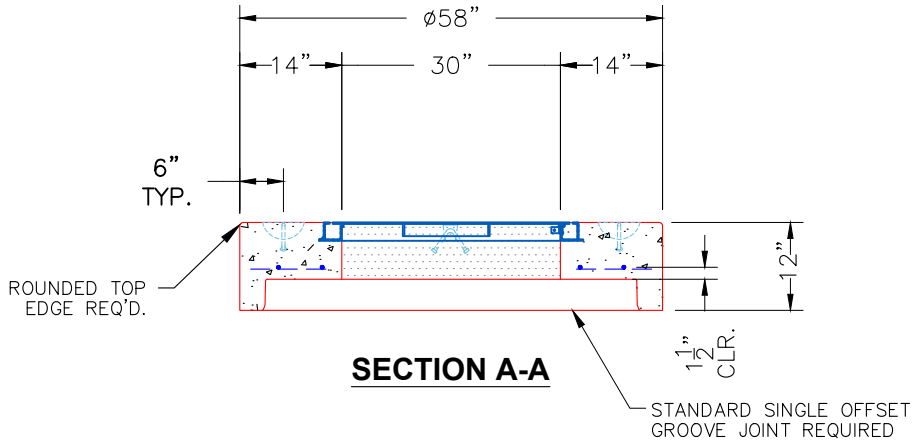

SECTION A-A

Coating (Int): Coating (Ext):	Seam Up: Flat Seam Dn: Groove	Wall Thickness: 5"	Height (Ext): 12"	Weight (Net): 1350 lb Volume (Net): 0.33cu.yd

Job Name: 26-2697 - Prestonsburg Yard Vault Job Location: Prestonsburg, KY Contractor: Prestonsburg City Utilities	Plant: 100 6/25/2026 7:04:52 PM	Tech: Jared - F PC: M. Sullivan	

Structure ID: YARD VAULT 1

P3 MH048LD12S **MH FLAT TOP w/30"x30" Hole F/G**

P4) 30" x 30" - HATCH (CAST FLUSH) - 3"	100 lb
P3) 48" - MH FLAT TOP w/30"x30" Hole F/G - 12"	1350 lb
P2) 48" - MH RISER T/F - 48"	3287 lb
P1) 48" - P.I.P. BY OTHERS - BTM SLAB F/n - 0"	0 lb
1) HATCH (Alum.) - HALLIDAY W1S 30"x30"	62 lb
2) 48" - Conseal CS-102 1.00" (Double)	0 lb
1) 30" x 30" - Conseal CS-102 1.00" (Double)	0 lb
2) Hole - 10	0 lb
Structure Total:	4799 lb

Structure Notes: .
1. PER ASTM C478 SPECIFICATIONS.
2. CONCRETE = 4,000 PSI AT 28 DAYS.
3. HATCH SUPPLIED BY I-CAST (HALLIDAY W1S 30"x30")(CAST-IN).
.
REINFORCING PER ASTM A615 (GRADE 60).
- TOP SLAB (As .62) #5 BARS AT 6" C.C.E.W.
- RISER (As .12)

NOTES:
1. PER ASTM C-478 LATEST REVISION
2. CONCRETE: 4,000 PSI AT 28 DAYS.
3. REINFORCEMENT: #5 BAR @ 6" C.C.E.W. PER ASTM A615 (GRADE 60)
5. JOINT SEALANT – 1" CS-102-DOUBLE
6. HATCH: W1S 30"X30" HATCH IS PROVIDED BY ICAST.
7. HATCH TO BE CAST INTO TOP SLAB.

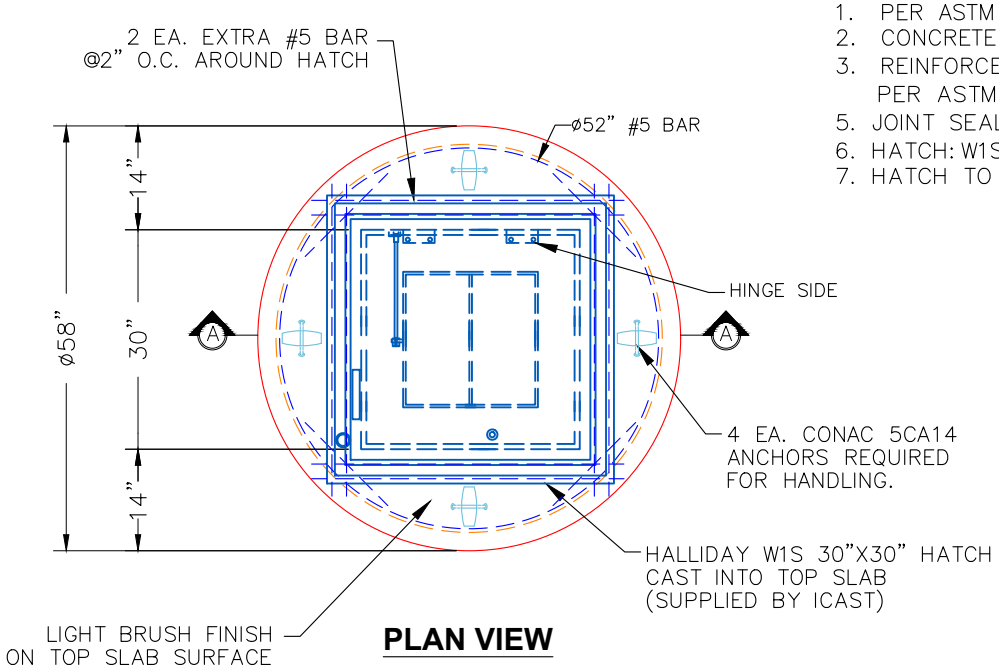

PLAN VIEW

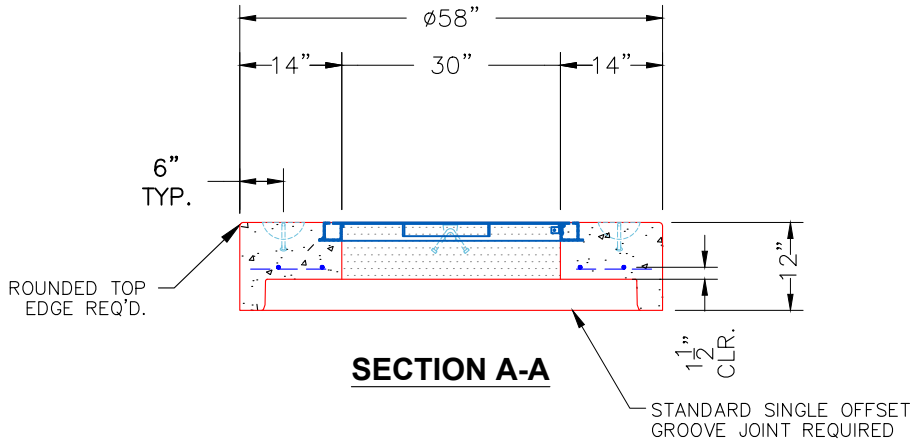

SECTION A-A

Coating (Int): Coating (Ext):	Seam Up: Flat Seam Dn: Groove	Wall Thickness: 5"	Height (Ext): 12"	Weight (Net): 1350 lb Volume (Net): 0.33cu.yd

Job Name: 26-1322B - KYTC Warren Co Call 104 (261503) Job Location: Bowling Green, KY Contractor: Cumberland Pipeline LLC	Plant: 100 4/21/2026 2:25:13 PM	Tech: Jared - A PC: Celina Goff	

Structure ID: 179-84 SS-MH

P1 MH048BAVF MH BASE (08"F) T/n

P4) 24" - CASTING HEIGHT - 7"	0 lb
P3) 48" - ECC CONE w/ 24" HOLE F/G - 30"	2050 lb
P2) 48" - MH RISER SPECIAL T/G - 24"	1629 lb
P1) 48" - MH BASE (08"F) T/n - 34"	3555 lb
1) 48" - MH INVERT CHANNEL - FULL HEIGHT	1440 lb
1) JOINT WRAP - 0.065"x6"x50' CONSEAL CS212	0 lb
1) JOINT WRAP PRIMER - CONSEAL CS-75 (1 gal.)	0 lb
1) CASTING - HOE MC-375 F/C BGMU Sanitary	271 lb
2) 48" - Conseal CS-102 1.00" (Double)	0 lb
2) Kor-N-Seal2 - S206-28	13 lb
1) PSX - 12-06 NYLO	8 lb
1) PSX - 12-08 NYLO	8 lb
6) MH Step ML-10-TDS-NCR - 10"	0 lb
Structure Total:	8974 lb

Rim: 477.09' Rim to Invert: 7.91' Slack: 1.92" Sump: 2" Step Position: 0

Structure Notes:
1. PER KYTC & ASTM C-478 SPECIFICATIONS
2. CONCRETE: 4,000 PSI AT 28 DAYS
3. REINFORCEMENT: PER ASTM A615
4. INVERT CHANNEL REQUIRED
5. STEPS AT 0 DEGREES
6. HOE MC-375 FRAME & COVER "BGMU SANITARY" SUPPLIED BY ICAST

Position	Elev	Angle	Ext. (cw)	Pipe	Pipe OD	Connector	Hole	Horz Size	Up (_)	Offset
Invert 1	469.18'	0°	0"	24" PVC SDR35	24.75"	Kor-N-Seal2 S206-28	28"	29.896"	0"	0"
Invert 2										
Invert 3	469.28'	178°	90.125"	24" PVC SDR35	24.75"	Kor-N-Seal2 S206-28	28"	29.896"	1.25"	0"
Invert 4	469.28'	279°	141.25"	8" PVC SDR35	8.5"	PSX 12-08 NYLO	12"	12.129"	1.25"	0"
Invert 5										
Invert 6										
Invert 7										
Invert 8										

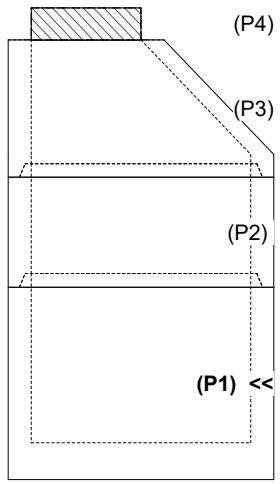

RIGHT-SIDE UP VIEW (int. dimensions)

UPSIDE-DOWN VIEW (int. dimenions)

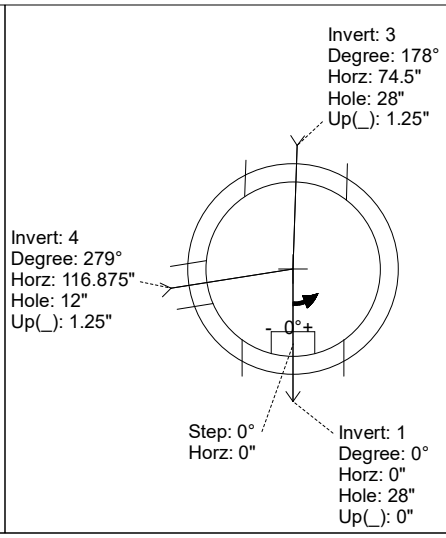

INSIDE WALL DIMENSIONS

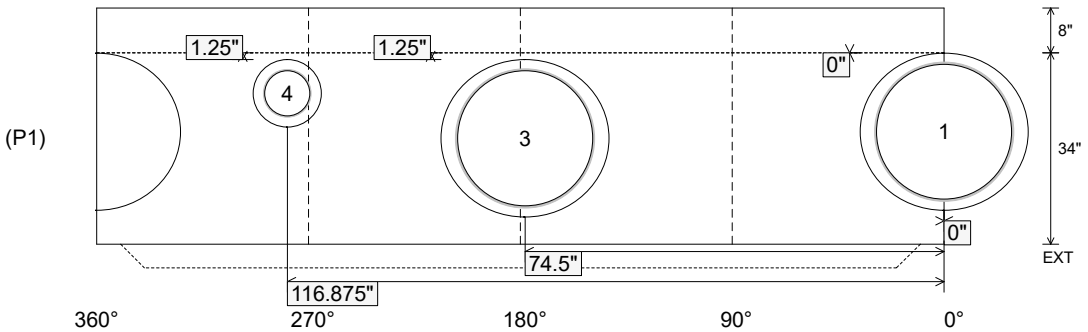

Coating (Int): Coating (Ext):	Seam Up: Tongue Seam Dn: n/a	Wall Thickness: 5" Floor Height: 8"	Height (Int): 34" Height (Ext): 42"	Weight (Net): 3555 lb Volume (Net): 0.91cu.yd

Job Name: 26-1322B - KYTC Warren Co Call 104 (261503) Job Location: Bowling Green, KY Contractor: Cumberland Pipeline LLC	Plant: 100 4/21/2026 2:25:13 PM	Tech: Jared - A PC: Celina Goff	

Structure ID: 179-84 SS-MH

P1 MH048BAVF MH BASE (08"F) T/n

P4) 24" - CASTING HEIGHT - 7"	0 lb
P3) 48" - ECC CONE w/ 24" HOLE F/G - 30"	2050 lb
P2) 48" - MH RISER SPECIAL T/G - 24"	1629 lb
P1) 48" - MH BASE (08"F) T/n - 34"	3555 lb
1) 48" - MH INVERT CHANNEL - FULL HEIGHT	1440 lb
1) JOINT WRAP - 0.065"x6"x50' CONSEAL CS212	0 lb
1) JOINT WRAP PRIMER - CONSEAL CS-75 (1 gal.)	0 lb
1) CASTING - HOE MC-375 F/C BGMU Sanitary	271 lb
2) 48" - Conseal CS-102 1.00" (Double)	0 lb
2) Kor-N-Seal2 - S206-28	13 lb
1) PSX - 12-06 NYLO	8 lb
1) PSX - 12-08 NYLO	8 lb
6) MH Step ML-10-TDS-NCR - 10"	0 lb
Structure Total:	8974 lb

Rim: 477.09' Rim to Invert: 7.91' Slack: 1.92" Sump: 2" Step Position: 0

Structure Notes:
1. PER KYTC & ASTM C-478 SPECIFICATIONS
2. CONCRETE: 4,000 PSI AT 28 DAYS
3. REINFORCEMENT: PER ASTM A615
4. INVERT CHANNEL REQUIRED
5. STEPS AT 0 DEGREES
6. HOE MC-375 FRAME & COVER "BGMU SANITARY" SUPPLIED BY ICAST

Position	Elev	Angle	Ext. (cw)	Pipe	Pipe OD	Connector	Hole	Horz Size	Up (_)	Offset
Invert 1	469.18'	0°	0"	24" PVC SDR35	24.75"	Kor-N-Seal2 S206-28	28"	29.896"	0"	0"
Invert 2										
Invert 3	469.28'	178°	90.125"	24" PVC SDR35	24.75"	Kor-N-Seal2 S206-28	28"	29.896"	1.25"	0"
Invert 4	469.28'	279°	141.25"	8" PVC SDR35	8.5"	PSX 12-08 NYLO	12"	12.129"	1.25"	0"
Invert 5										
Invert 6										
Invert 7										
Invert 8										

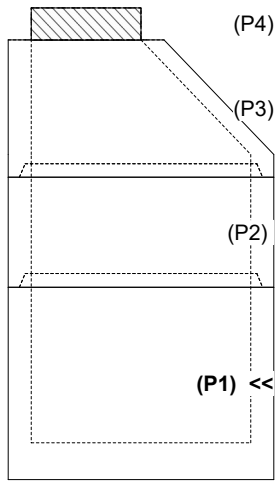

RIGHT-SIDE UP VIEW (int. dimensions)

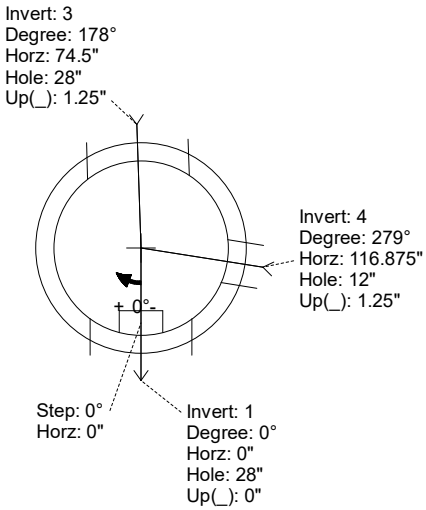

UPSIDE-DOWN VIEW (int. dimenions)

INVERT CHANNEL DRAWING

INSIDE WALL DIMENSIONS

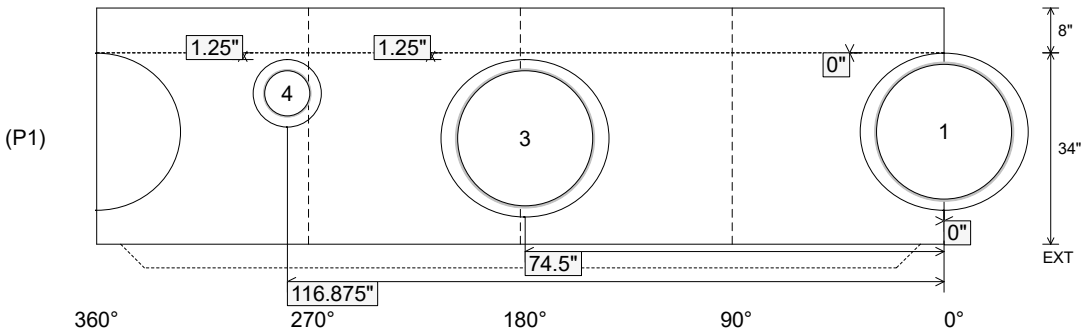

Coating (Int): Coating (Ext):	Seam Up: Tongue Seam Dn: n/a	Wall Thickness: 5" Floor Height: 8"	Height (Int): 34" Height (Ext): 42"	Weight (Net): 3555 lb Volume (Net): 0.91cu.yd

Job Name: 26-3183 ADS Freedom's Way Commons
Job Location: Shelbyville, KY
Contractor: ADS Advanced Drainage Systems, Inc.

Plant: Beaver Dam
8/14/2026 12:26:06 PM

Tech: S. Felletter
PC: T. Ryan

Structure ID: STR-14

P1 MH060BAVF MH BASE Custom Ht T/n

P5) 24" - CASTING HEIGHT - 7"	0 lb
P4) 60" - MH FLAT TOP w/24" Ctr. Hole F/G - 13"	2674 lb
P3) 60" - MH RISER NO STEPS T/G - 72"	7516 lb
P2) 60" - MH RISER NO STEPS T/G - 72"	7312 lb
P1) 60" - MH BASE Custom Ht T/n - 27"	5552 lb
1) ASSEMBLY REQUIRED	0 lb
1) JOINT WRAP PRIMER - CONSEAL CS-75 (1 gal.)	0 lb
1) JOINT WRAP - 0.065"x6"x50' CONSEAL CS212	0 lb
1) CASTING - HOE MC-375 F/C Storm	271 lb
3) 60" - Conseal CS-102 1.00" (Double)	0 lb
1) 24" - Conseal CS-102 1.00" (Double)	0 lb
2) Hole - 16	0 lb
Structure Total:	23325 lb

Structure Notes: .
1. PER ASTM C478 SPECIFICATIONS.
2. CONCRETE = 4,000 PSI AT 28 DAYS.
3. CASTING BY ICAST (HOE MC-375 F/C "STORM").
4. LIFTING ANCHORS TO BE INSTALLED ON THE OUTSIDE OF THE STRUCTURE.

.
REINFORCING PER ASTM A615 (GRADE 60).
- TOP SLAB (As .62) #5 BARS AT 6" C.C.E.W.
- RISER/WALLS (As .18)
- FLOOR (As .37) #5 BARS AT 10" C.C.E.W.

Rim: 729.4' Rim to Invert: 9.35' Slack: 2.2" Sump: 81" Step Position:

Position	Elev	Angle	Ext. (cw)	Pipe	Pipe OD	Connector	Hole	Horz Size	Up (_)	Offset
Invert 1										
Invert 2										
Invert 3										
Invert 4										
Invert 5										
Invert 6										
Invert 7										
Invert 8										

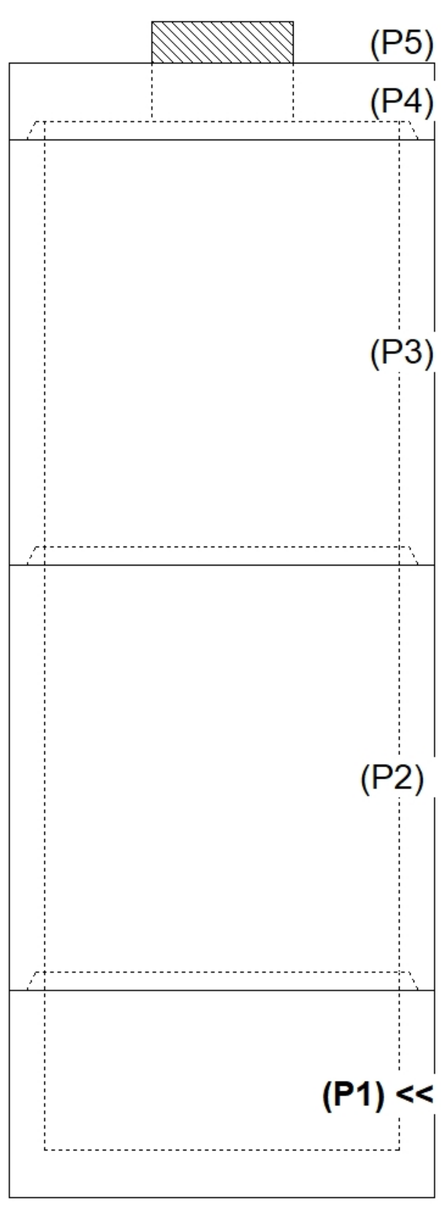

RIGHT-SIDE UP VIEW (int. dimensions)

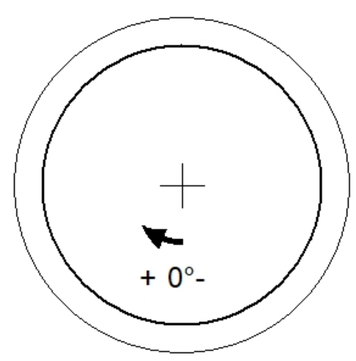

UPSIDE-DOWN VIEW (int. dimenions)

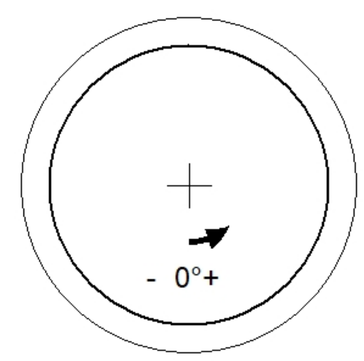

INSIDE WALL DIMENSIONS

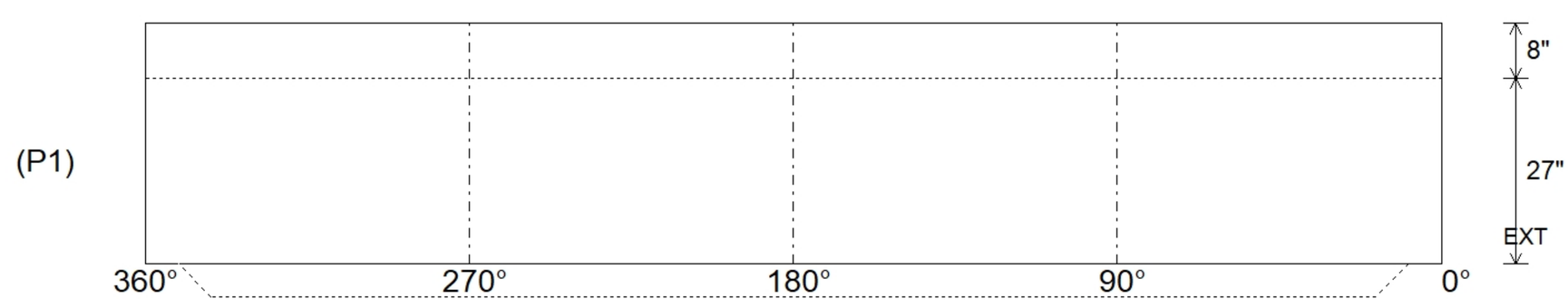

Coating (Int): Coating (Ext):	Seam Up: Tongue Seam Dn: n/a	Wall Thickness: 6" Floor Height: 8"	Height (Int): 27" Height (Ext): 35"	Weight (Net): 5552 lb Volume (Net): 1.42cu.yd

Job Name: 26-3183 ADS Freedom's Way Commons
Job Location: Shelbyville, KY
Contractor: ADS Advanced Drainage Systems, Inc.

Plant: Beaver Dam
8/14/2026 12:27:26 PM

Tech: S. Felletter
PC: T. Ryan

Structure ID: STR-14

P2 MH060RS72S MH RISER NO STEPS T/G

P5) 24" - CASTING HEIGHT - 7"	0 lb
P4) 60" - MH FLAT TOP w/24" Ctr. Hole F/G - 13"	2674 lb
P3) 60" - MH RISER NO STEPS T/G - 72"	7516 lb
P2) 60" - MH RISER NO STEPS T/G - 72"	7312 lb
P1) 60" - MH BASE Custom Ht T/n - 27"	5552 lb
1) ASSEMBLY REQUIRED	0 lb
1) JOINT WRAP PRIMER - CONSEAL CS-75 (1 gal.)	0 lb
1) JOINT WRAP - 0.065"x6"x50' CONSEAL CS212	0 lb
1) CASTING - HOE MC-375 F/C Storm	271 lb
3) 60" - Conseal CS-102 1.00" (Double)	0 lb
1) 24" - Conseal CS-102 1.00" (Double)	0 lb
2) Hole - 16	0 lb
Structure Total:	23325 lb

Structure Notes: .
1. PER ASTM C478 SPECIFICATIONS.
2. CONCRETE = 4,000 PSI AT 28 DAYS.
3. CASTING BY ICAST (HOE MC-375 F/C "STORM").
4. LIFTING ANCHORS TO BE INSTALLED ON THE OUTSIDE OF THE STRUCTURE.

.
REINFORCING PER ASTM A615 (GRADE 60).
- TOP SLAB (As .62) #5 BARS AT 6" C.C.E.W.
- RISER/WALLS (As .18)
- FLOOR (As .37) #5 BARS AT 10" C.C.E.W.

Rim: 729.4' Rim to Invert: 9.35' Slack: 2.2" Sump: 81" Step Position:

Position	Elev	Angle	Ext. (cw)	Pipe	Pipe OD	Connector	Hole	Horz Size	Up (_)	Offset
Invert 1	720.05'	0°	0"	12" HDPE	14.5"	Hole 16	16"	16.196"	47.25"	0"
Invert 2	720.05'	275°	172.788"	12" HDPE	14.5"	Hole 16	16"	16.196"	47.25"	0"
Invert 3										
Invert 4										
Invert 5										
Invert 6										
Invert 7										
Invert 8										

RIGHT-SIDE UP VIEW (int. dimensions)

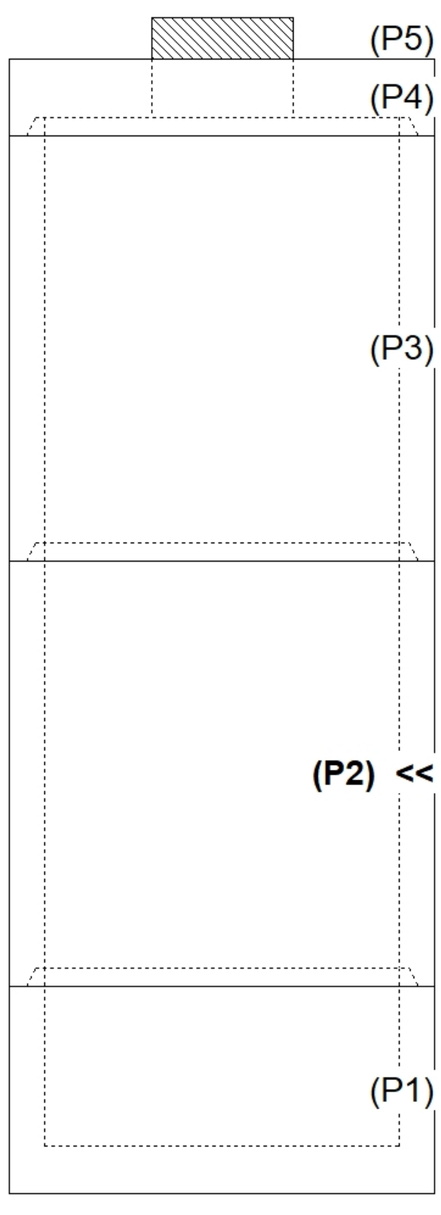

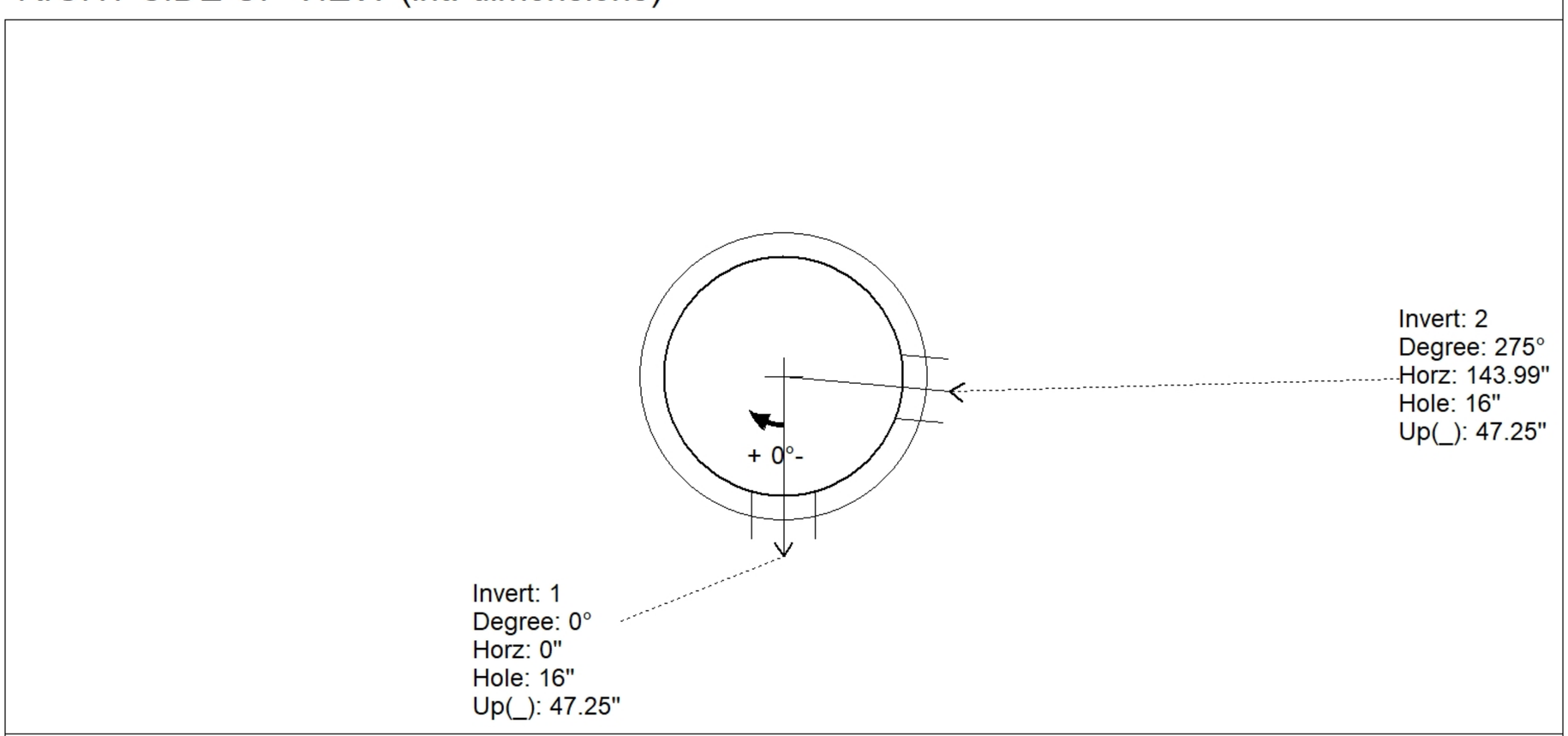

INSIDE WALL DIMENSIONS

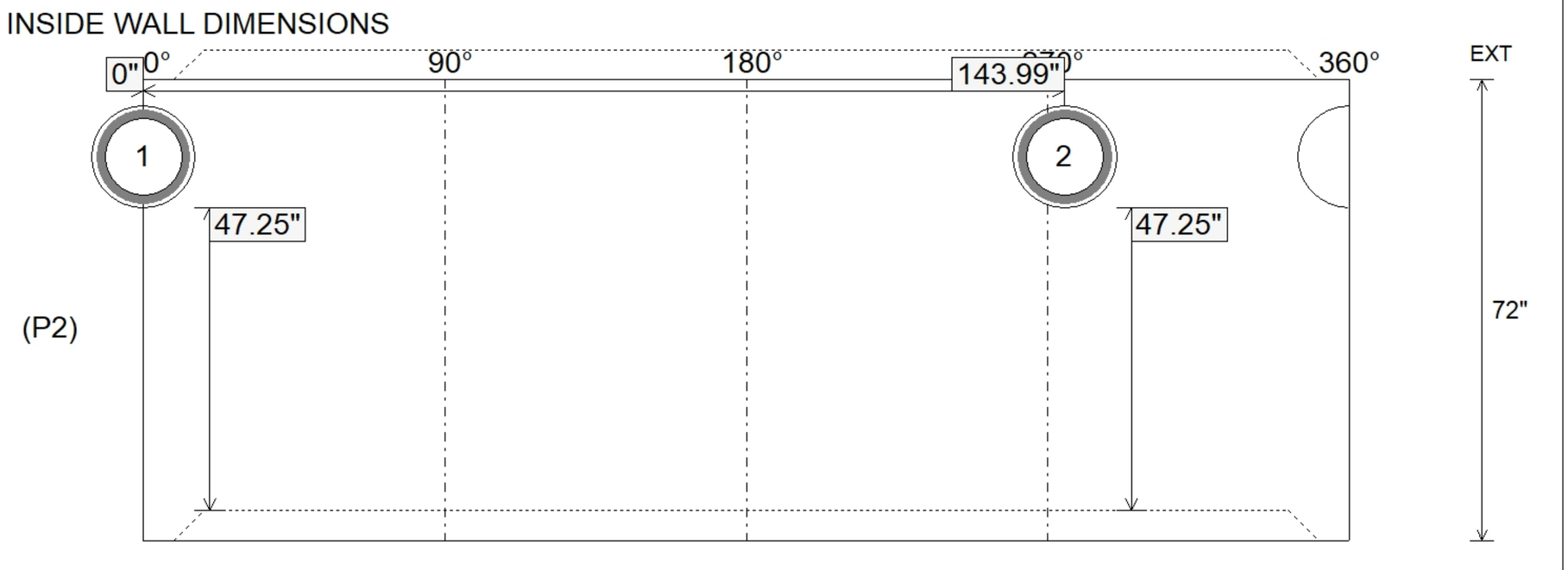

Coating (Int): Coating (Ext):	Seam Up: Tongue Seam Dn: Groove	Wall Thickness: 6" Floor Height: 0"	Height (Int): 72" Height (Ext): 72"	Weight (Net): 7312 lb Volume (Net): 1.87cu.yd

Job Name: 26-1000P2 Clark Distributing New HQ - Site Structures
Job Location: Bowling Green, KY
Contractor: Scotty's Contracting & Stone, LLC

Plant: Beaver Dam
8/11/2026 9:19:09 AM

Tech: S. Felletter
PC: M. Sullivan

Structure ID: DBI-15

P1 MH072BA60 MH BASE T/n

P4) 24" x 30" - CASTING HEIGHT - 3.50"	0 lb
P3) 72" - MH FLAT TOP w/24"x30" Hole LOU-MSD F/G - 15"	6405 lb
P2) 72" - MH RISER Custom Ht T/G - 31"	4519 lb
P1) 72" - MH BASE T/n - 60"	10022 lb
1) CASTING - HOE KY-460-11 F/G (DBI 11)	421 lb
2) 72" - Conseal CS-102 1.00"	0 lb
1) 24" x 30" - Conseal CS-102 1.00"	0 lb
2) Hole - 50	0 lb
1) Hole - 16	0 lb
5) MH Step ML-10-TDS-NCR - 10"	0 lb
Structure Total:	21367 lb

Structure Notes: .
1. PER ASTM C478 SPECIFICATIONS.
2. CONCRETE = 4,000 PSI AT 28 DAYS.
3. CASTING BY ICAST (HOE KY-460-11 F/G).
.
REINFORCING PER ASTM A615 (GRADE 60).
- TOP SLAB (As .62) #5 BARS AT 6" C.C.E.W..
- RISER/WALLS (As .18)
- FLOOR (As .37) #5 BARS AT 10" C.C.E.W.

Rim: 589.34' Rim to Invert: 9.13' Slack: 0.06" Sump: 0" Step Position: 90°

Position	Elev	Angle	Ext. (cw)	Pipe	Pipe OD	Connector	Hole	Horz Size	Up (_)	Offset
Invert 1	580.21'	0°	0"	42" HDPE	47.7"	Hole 50	50"	55.271"	-3.15"	0"
Invert 2	580.21'	190°	142.593"	42" HDPE	47.7"	Hole 50	50"	55.271"	-3.15"	0"
Invert 3	580.21'	285°	213.89"	12" PVC SDR35	12.5"	Hole 16	16"	16.135"	-0.25"	0"
Invert 4										
Invert 5										
Invert 6										
Invert 7										
Invert 8										

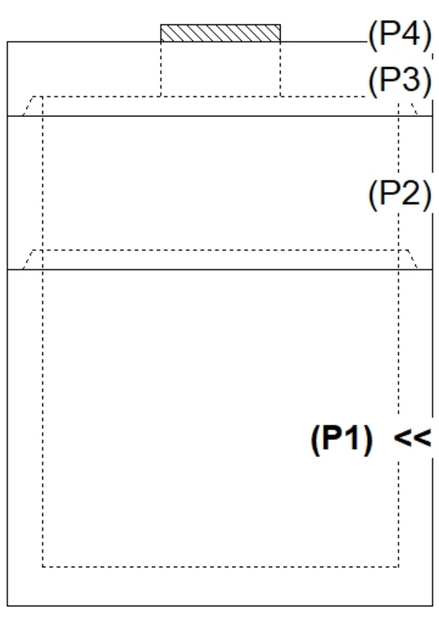

RIGHT-SIDE UP VIEW (int. dimensions)

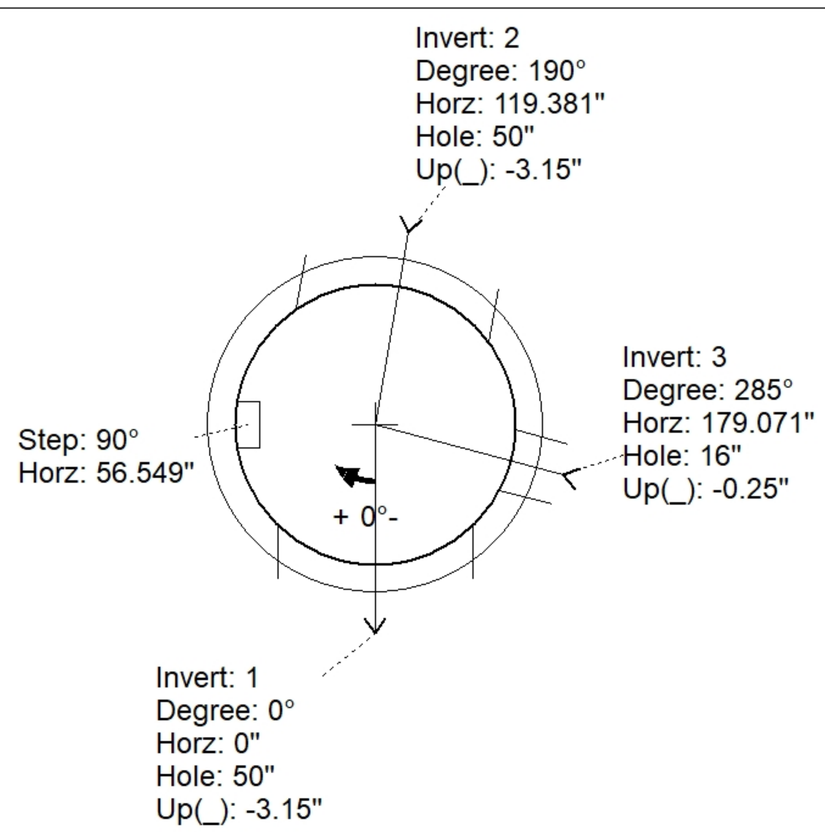

UPSIDE-DOWN VIEW (int. dimenions)

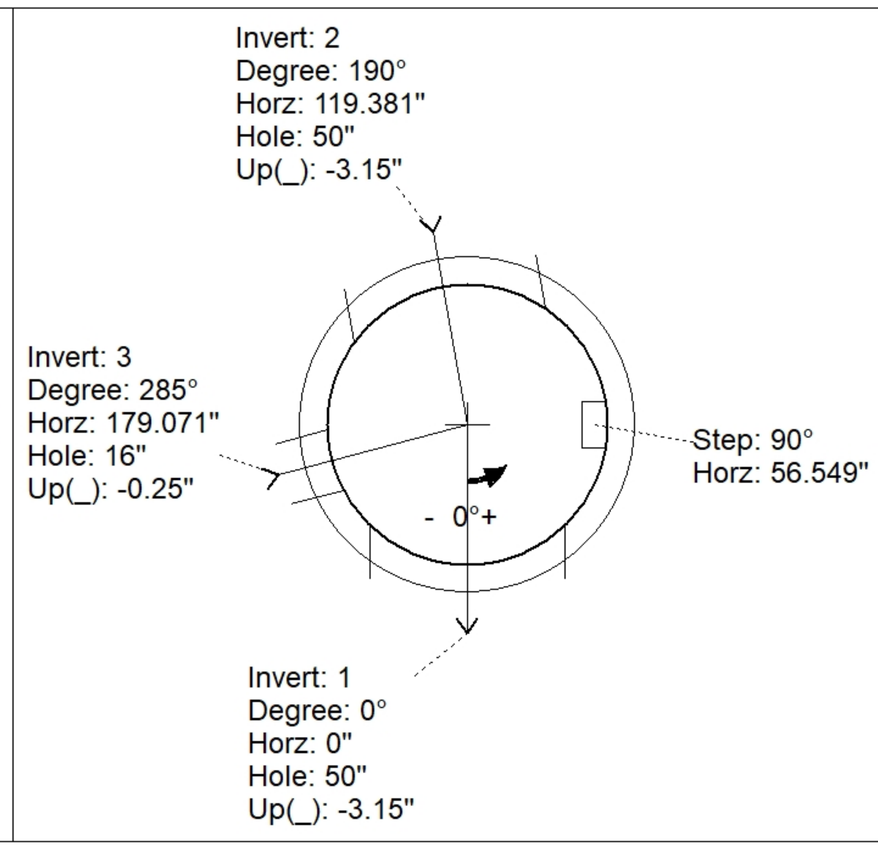

INSIDE WALL DIMENSIONS

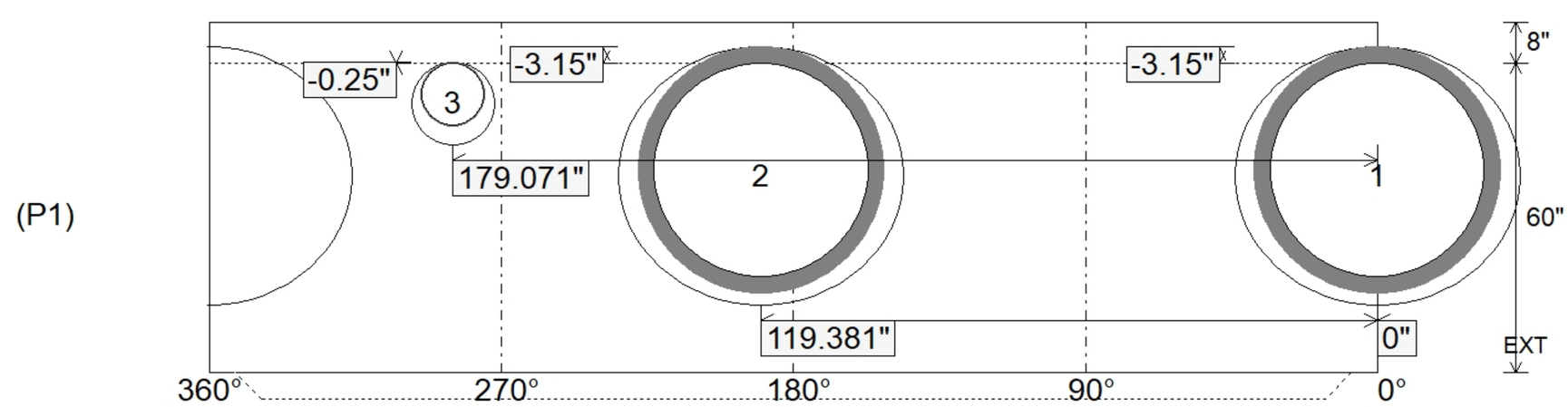

Coating (Int): Coating (Ext):	Seam Up: Tongue Seam Dn: n/a	Wall Thickness: 7" Floor Height: 8"	Height (Int): 60" Height (Ext): 68"	Weight (Net): 10022 lb Volume (Net): 2.56cu.yd

Job Name: 26-1000P2 Clark Distributing New HQ - Site Structures Job Location: Bowling Green, KY Contractor: Scotty's Contracting & Stone, LLC	Plant: Beaver Dam 8/11/2026 9:22:06 AM	Tech: S. Felletter PC: M. Sullivan	

Structure ID: DBI-10

P2 MH072LD15-48SQ **MH FLAT TOP w/48"x48" Hole F/G**

P3) 48" x 48" - CASTING HEIGHT - 4.5"	0 lb
P2) 72" - MH FLAT TOP w/48"x48" Hole F/G - 15"	4411 lb
P1) 72" - MH BASE T/n - 66"	11321 lb
1) CASTING - HOE 918 F/G	228 lb
1) 72" - Conseal CS-102 1.00"	0 lb
1) 48" x 48" - Conseal CS-102 1.00"	0 lb
2) Hole - 44	0 lb
2) Hole - 18	0 lb
6) MH Step ML-10-TDS-NCR - 10"	0 lb
Structure Total:	15960 lb

Structure Notes: .
1. PER ASTM C478 SPECIFICATIONS.
2. CONCRETE = 4,000 PSI AT 28 DAYS.
3. CASTING BY ICAST (HOE 918 F/G).
.
REINFORCING PER ASTM A615 (GRADE 60).
- TOP SLAB (As .62) #5 BARS AT 6" C.C.E.W..
- RISER/WALLS (As .18)
- FLOOR (As .37) #5 BARS AT 10" C.C.E.W.

NOTES:
1. MANUFACTURED TO ASTM C-478 (LATEST REVISION).
2. CONCRETE: 4,000 PSI AT 28 DAYS.
3. REINFORCING: #5 BAR @ 6" C.C.E.W. (GRADE 60).

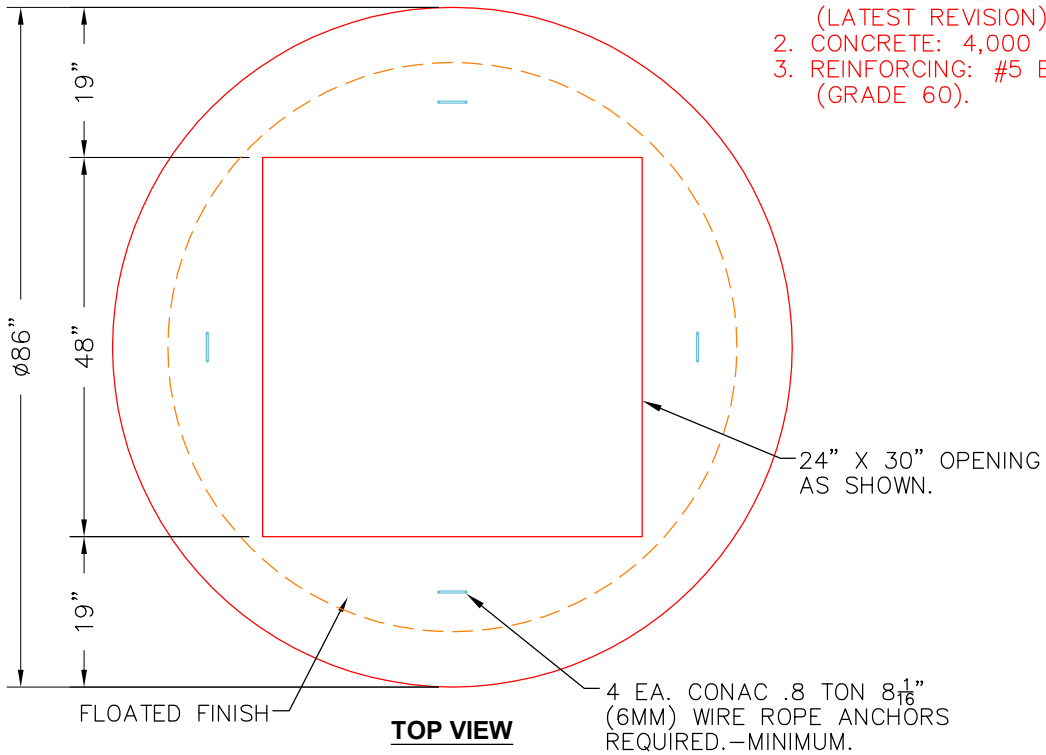

TOP VIEW

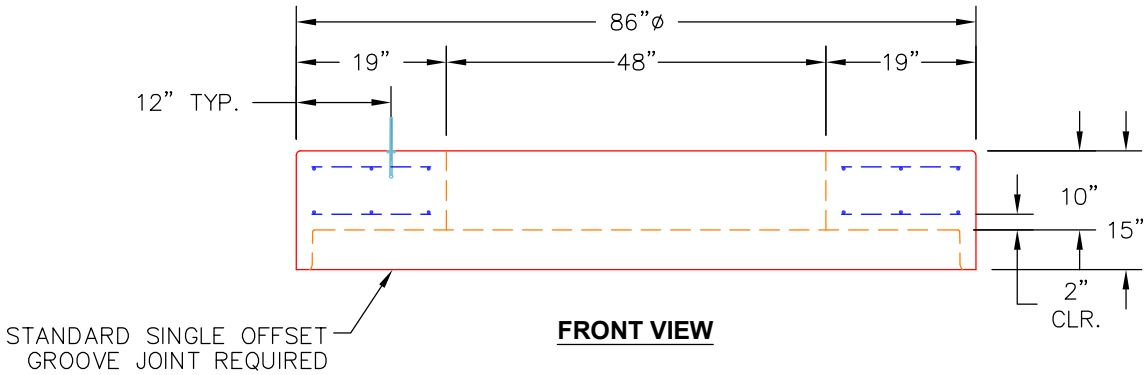

FRONT VIEW

Coating (Int): Coating (Ext):	Seam Up: Flat Seam Dn: Groove	Wall Thickness: 7"	Height (Ext): 15"	Weight (Net): 4411 lb Volume (Net): 1.13cu.yd

Job Name: 26-1000P2 Clark Distributing New HQ - Site Structures Job Location: Bowling Green, KY Contractor: Scotty's Contracting & Stone, LLC	Plant: Beaver Dam 8/11/2026 9:19:05 AM	Tech: S. Felletter PC: M. Sullivan	

Structure ID: DBI-9

P1 MH072BAVF MH BASE Custom Ht T/n

P3) 24" x 30" - CASTING HEIGHT - 3.50"	0 lb
P2) 72" - MH FLAT TOP w/24"x30" Hole F/G - 15"	4561 lb
P1) 72" - MH BASE Custom Ht T/n - 73"	12552 lb
1) CASTING - HOE KY-460-11 F/G (DBI 11)	421 lb
1) 72" - Conseal CS-102 1.00"	0 lb
1) 24" x 30" - Conseal CS-102 1.00"	0 lb
2) Hole - 44	0 lb
1) Hole - 14	0 lb
6) MH Step ML-10-TDS-NCR - 10"	0 lb
Structure Total:	17534 lb

Structure Notes: .
1. PER ASTM C478 SPECIFICATIONS.
2. CONCRETE = 4,000 PSI AT 28 DAYS.
3. CASTING BY ICAST (HOE KY-460-11 F/G).

.
REINFORCING PER ASTM A615 (GRADE 60).
- TOP SLAB (As .62) #5 BARS AT 6" C.C.E.W..
- RISER/WALLS (As .18)
- FLOOR (As .37) #5 BARS AT 10" C.C.E.W.

Rim: 586.8' Rim to Invert: 7.68' Slack: 0.66" Sump: 0" Step Position: 90°

Position	Elev	Angle	Ext. (cw)	Pipe	Pipe OD	Connector	Hole	Horz Size	Up (_)	Offset
Invert 1	579.12'	0°	0"	36" HDPE	41.7"	Hole 44	44"	47.337"	-2.85"	0"
Invert 2	579.12'	155°	116.326"	36" HDPE	41.7"	Hole 44	44"	47.337"	-2.85"	0"
Invert 3	579.12'	240°	180.118"	10" PVC SDR35	10.5"	Hole 14	14"	14.09"	-0.25"	0"
Invert 4										
Invert 5										
Invert 6										
Invert 7										
Invert 8										

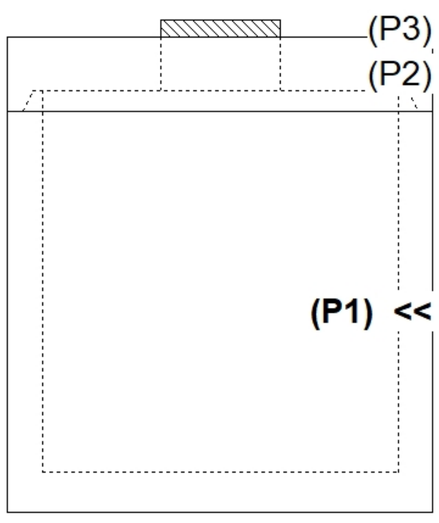

RIGHT-SIDE UP VIEW (int. dimensions)

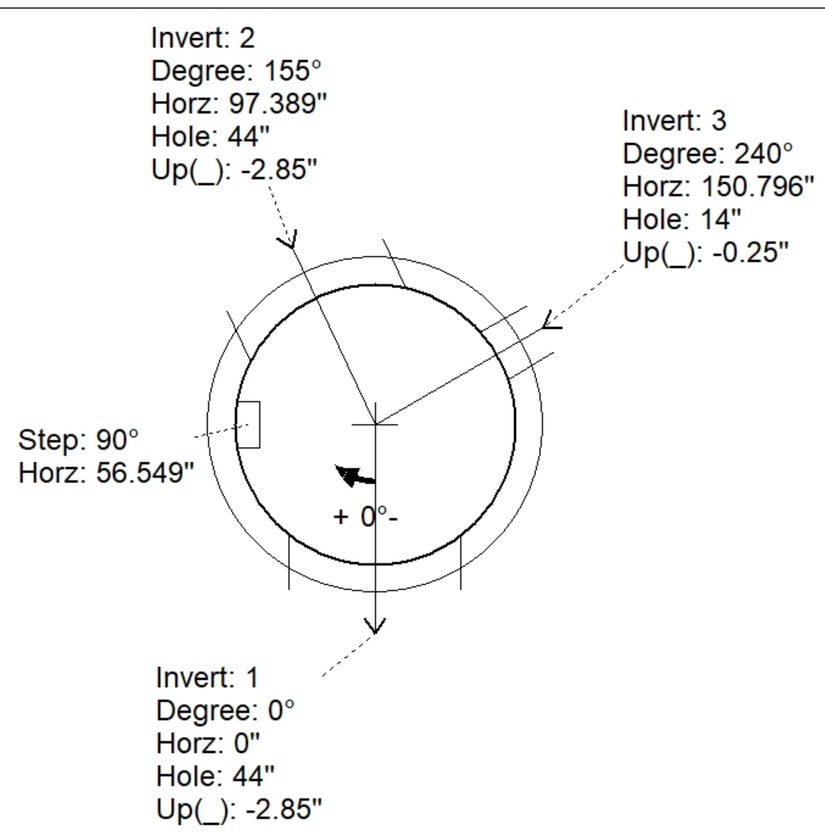

UPSIDE-DOWN VIEW (int. dimenions)

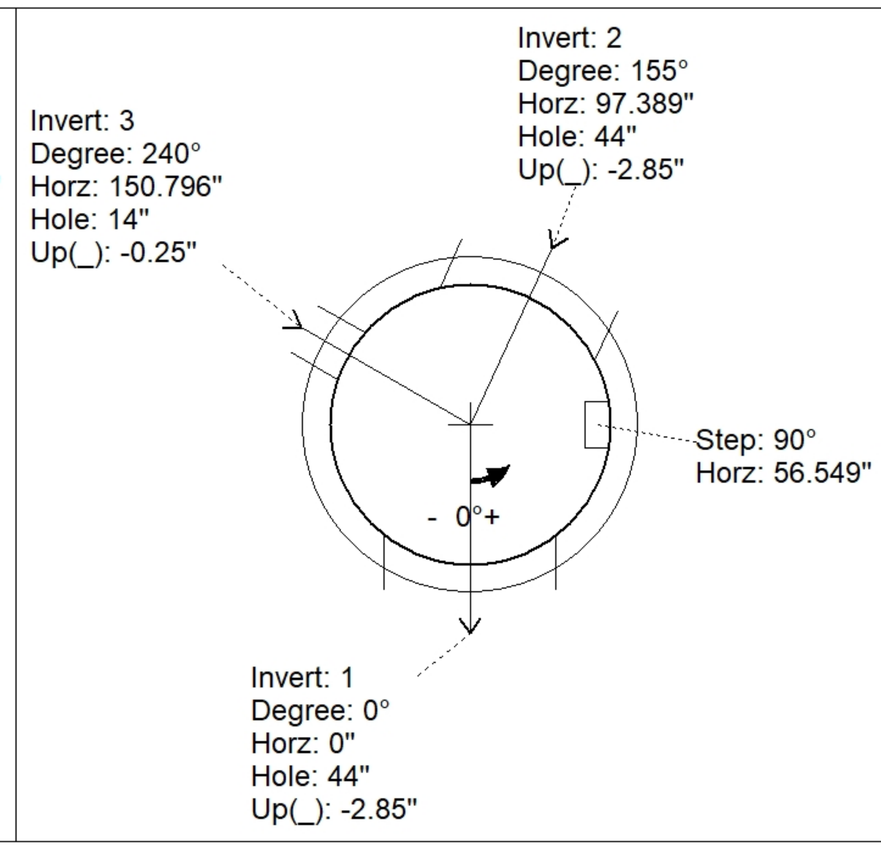

INSIDE WALL DIMENSIONS

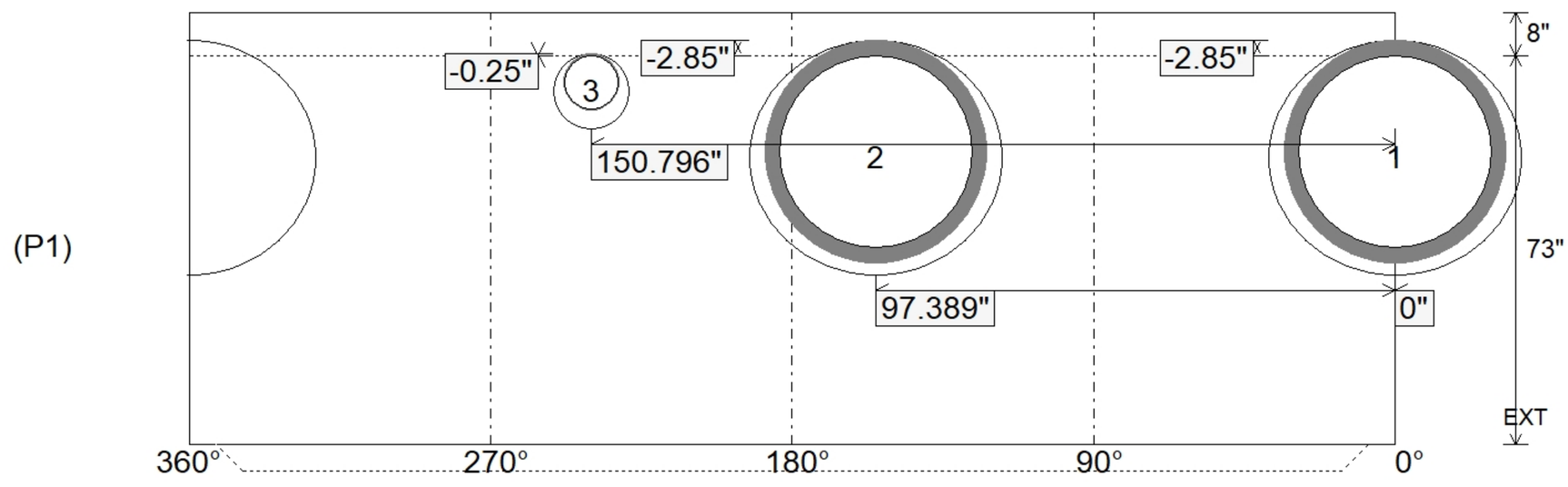

Coating (Int): Coating (Ext):	Seam Up: Tongue Seam Dn: n/a	Wall Thickness: 7" Floor Height: 8"	Height (Int): 73" Height (Ext): 81"	Weight (Net): 12552 lb Volume (Net): 3.21cu.yd

Job Name: 26-1549 Cowan St. Trunk Sewer Job Location: Nashville, TN Contractor: Garney Companies, Inc.	Plant: 100 8/5/2026 9:31:50 AM	Tech: Jared - A PC: Jay Ross Jarvis	

Structure ID: MH-4-5 SS-MH

P5 MH084LD17SPX **MH FLAT TOP w/2X 30" Holes ECC w/XYPEX**

P6) 30" - CASTING HEIGHT - 6"	0 lb
P5) 84" - MH FLAT TOP w/2X 30" Holes ECC w/XYPEX - 17"	6992 lb
P4) 84" - MH RISER w/XYPEX - 84"	16298 lb
P3) 84" - MH RISER w/XYPEX - 96"	18626 lb
P2) 84" - MH RISER w/XYPEX - 96"	18626 lb
P1) 84" - MH BASE w/FLANGE (12F/14EF) w/XYPEX - 95"	27392 lb
1) JOINT WRAP - 0.065"x6"x50' CONSEAL CS212	0 lb
1) JOINT WRAP PRIMER - CONSEAL CS-75 (1 gal.)	0 lb
1) ADMIXTURE XYPEX C-1000 RED	0 lb
1) SECONDARY POUR - EXT. FLANGE	0 lb
2) CASTING - JBS 1312 WT F/C SANITARY	600 lb
4) 84" - Conseal CS-102 1.00" (Double)	0 lb
2) A-Lok - 1840	2 lb
Structure Total:	88536 lb

Structure Notes: .
PLAN LABEL: MH-4
1. JBS 1312 WT F/C SANITARY PROVIDED BY ICAST.
2. PER ASTM C478 SPECIFICATIONS.
3. CONCRETE = 4,000 PSI AT 28 DAYS.
4. ADMIXTURE = XYPEX C-1000 RED.
5. REINFORCING PER ASTM A615 (GRADE 60).
- TOP SLAB AS SHOWN BELOW.
- RISER/WALLS (As .24)
- FLOOR (As .47) #5 BARS AT 8" C.C.E.W.
6. ANY REQUIRED INTERIOR COATINGS TO BE SUPPLIED & APPLIED BY OTHERS.
7. **NO STEPS**

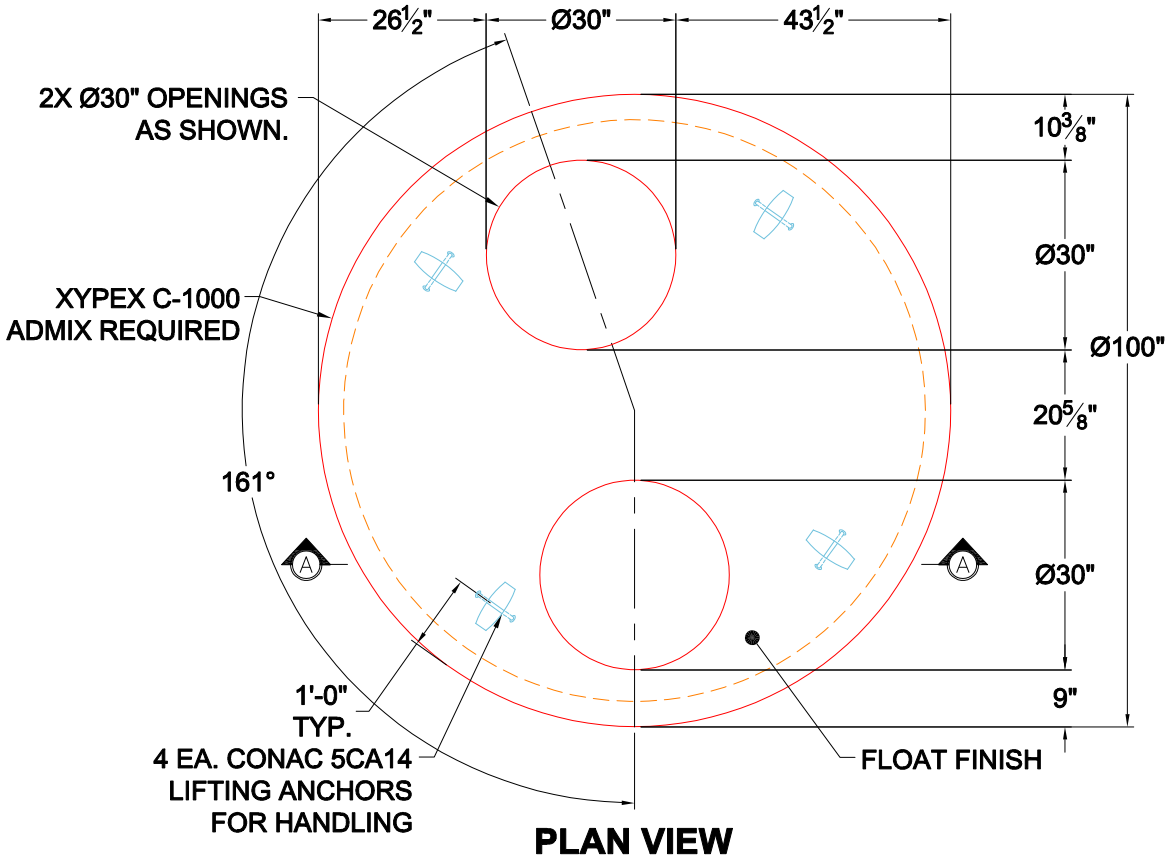

PLAN VIEW

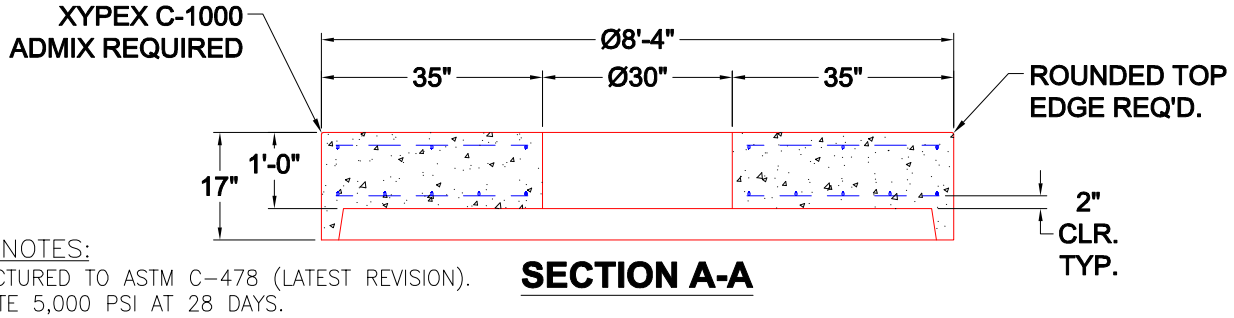

SECTION A-A

GENERAL NOTES:
1. MANUFACTURED TO ASTM C-478 (LATEST REVISION).
2. CONCRETE 5,000 PSI AT 28 DAYS.
3. XYPEX C-1000 ADMIX REQUIRED.
4. REINFORCING: TOP MAT #4 @ 18" O.C. E.W.
BOTTOM MAT #4 @ 9" O.C. E.W.
(GRADE 60)

Coating (Int): Coating (Ext):	Seam Up: Flat Seam Dn: Groove	Wall Thickness: 8"	Height (Ext): 17"	Weight (Net): 6992 lb Volume (Net): 1.79cu.yd

Job Name: 26-1814 - Brownsville Sewer System Additions Job Location: Cave City, KY Contractor: Luttrell & Sons, LLC	Plant: 100 8/4/2026 6:57:37 PM	Tech: Jared - F PC: A. Chambers	

Structure ID: QL6

P1 MH096BAEVF **MH BASE EF Cust. Ht. 18"F (24"EF =162"OD) T/n**

P5) 37" x 59" - HATCH (CAST FLUSH) - 3"	100 lb
P4) 96" - MH FLAT TOP w/37"x59" Hatch F/G - 17"	8296 lb
P3) 96" - MH RISER Custom Ht T/G - 25"	6228 lb
P2) 96" - MH RISER T/G - 84"	20622 lb
P1) 96" - MH BASE EF Cust. Ht. 18"F (24"EF =162"OD) T/n - 36"	40101 lb
3) JOINT WRAP - 12" WD x 096" MAC WRAP	0 lb
3) 96" - Conseal CS-231 1.00" (Double)	0 lb
2) PSX - 12-06 NYLO	16 lb
1) PSX - 8QRS-S NYLO	6 lb
1) PSX - 12-08 NYLO	8 lb
Structure Total:	75377 lb

NOTE:
4 EA. 8CA18 CONAC A-ANCHORS FOR PLANT & FIELD HANDLING – INSTALLED AT 0, 90, 180, & 270, 12" FROM TOP OF WALLS

Structure Notes: .
1. PER ASTM C478 SPECIFICATIONS.
2. CONCRETE = 4,000 PSI AT 28 DAYS.
3. 37" X 59" USF ALUMINIUM DOUBLE DOOR HATCH APD TO BE SUPPLIED BY OTHERS & CAST-IN INTO CENTER OF TOP SLAB BY ICAST.
.
REINFORCING PER ASTM A615 (GRADE 60).
- TOP SLAB (As .62) #5 BARS AT 6" C.C.E.W. (DOUBLE MAT)
- RISER/WALLS (As .24)
- FLOOR (As .47) TOP AND BTM LAYER AT #5 BARS AT 12" C.C.E.W.

Rim: 546' Rim to Invert: 8.75' Slack: 0" Sump: 57" Step Position:

Position	Elev	Angle	Ext. (cw)	Pipe	Pipe OD	Connector	Hole	Horz Size	Up (_)	Offset
Invert 1										
Invert 2										
Invert 3										
Invert 4										
Invert 5										
Invert 6										
Invert 7										
Invert 8										

FIRST POUR DRAWING

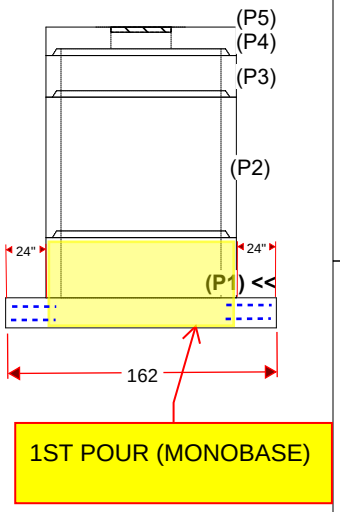

RIGHT-SIDE UP VIEW (int. dimensions)

1ST POUR (MONOBASE) = 24,385 LBS
2ND POUR (EXTENDED FLANGE) = 15,716 LBS
TOTAL = 40,101 LBS

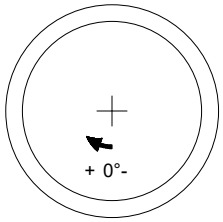

UPSIDE-DOWN VIEW (int. dimenions)

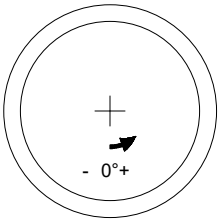

INSIDE WALL DIMENSIONS

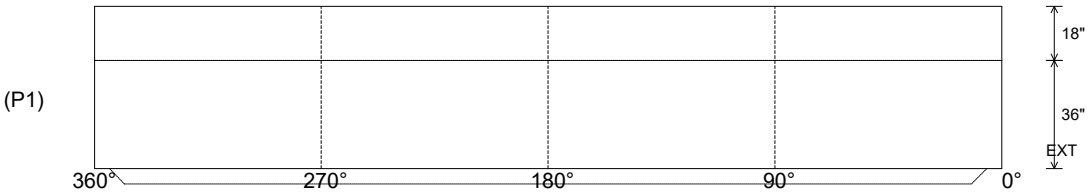

Coating (Int): Coating (Ext):	Seam Up: Tongue Seam Dn: n/a	Wall Thickness: 9" Floor Height: 18"	Height (Int): 36" Height (Ext): 54"	Weight (Net): 40101 lb Volume (Net): 10.24cu.yd

Job Name: 26-1814 - Brownsville Sewer System Additions Job Location: Cave City, KY Contractor: Luttrell & Sons, LLC	Plant: 100 8/4/2026 6:57:37 PM	Tech: Jared - F PC: A. Chambers	

Structure ID: QL6

P1 MH096BAEVF **MH BASE EF Cust. Ht. 18"F (24"EF =162"OD) T/n**

P5) 37" x 59" - HATCH (CAST FLUSH) - 3"	100 lb
P4) 96" - MH FLAT TOP w/37"x59" Hatch F/G - 17"	8296 lb
P3) 96" - MH RISER Custom Ht T/G - 25"	6228 lb
P2) 96" - MH RISER T/G - 84"	20622 lb
P1) 96" - MH BASE EF Cust. Ht. 18"F (24"EF =162"OD) T/n - 36"	40101 lb
3) JOINT WRAP - 12" WD x 096" MAC WRAP	0 lb
3) 96" - Conseal CS-231 1.00" (Double)	0 lb
2) PSX - 12-06 NYLO	16 lb
1) PSX - 8QRS-S NYLO	6 lb
1) PSX - 12-08 NYLO	8 lb
Structure Total:	75377 lb

Structure Notes: .
1. PER ASTM C478 SPECIFICATIONS.
2. CONCRETE = 4,000 PSI AT 28 DAYS.
3. 37" X 59" USF ALUMINIUM DOUBLE DOOR HATCH APD TO BE SUPPLIED BY OTHERS & CAST-IN INTO CENTER OF TOP SLAB BY ICAST.
.
REINFORCING PER ASTM A615 (GRADE 60).
- TOP SLAB (As .62) #5 BARS AT 6" C.C.E.W. (DOUBLE MAT)
- RISER/WALLS (As .24)
- FLOOR (As .47) TOP AND BTM LAYER AT #5 BARS AT 12" C.C.E.W.

Rim: 546' Rim to Invert: 8.75' Slack: 0" Sump: 57" Step Position:

Position	Elev	Angle	Ext. (cw)	Pipe	Pipe OD	Connector	Hole	Horz Size	Up (_)	Offset
Invert 1										
Invert 2										
Invert 3										
Invert 4										
Invert 5										
Invert 6										
Invert 7										
Invert 8										

SECOND POUR DRAWING

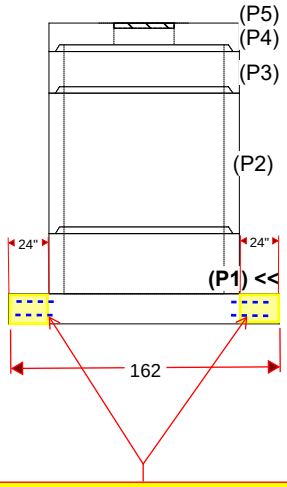

DRILL & STUB DOUBLE MAT #5 BAR @ 12" C.C.E.W (GRADE 60) OUT OF BASE FLOOR FOR EXTENDED FLANGE POUR TIE-IN - MIN. 6" PENETRATION INTO BASE FLOOR & 2" MIN. REBAR CLEARANCE (TYP)

RIGHT-SIDE UP VIEW (int. dimensions)

1ST POUR (MONOBASE) = 24,385 LBS
2ND POUR (EXTENDED FLANGE) = 15,716 LBS
TOTAL = 40,101 LBS

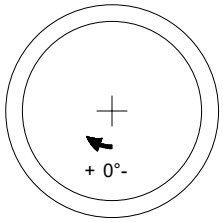

UPSIDE-DOWN VIEW (int. dimenions)

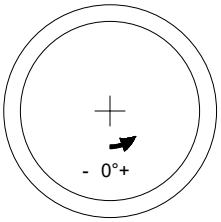

INSIDE WALL DIMENSIONS

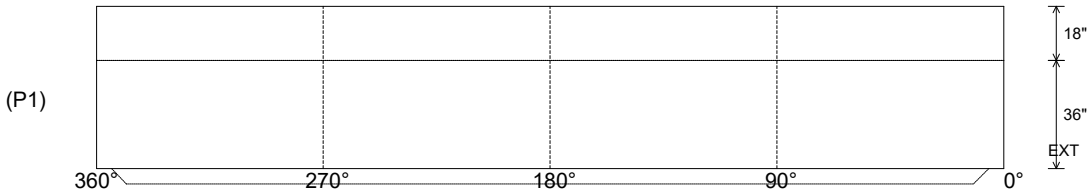

Coating (Int): Coating (Ext):	Seam Up: Tongue Seam Dn: n/a	Wall Thickness: 9" Floor Height: 18"	Height (Int): 36" Height (Ext): 54"	Weight (Net): 40101 lb Volume (Net): 10.24cu.yd

Job Name: 26-1000P2 Clark Distributing New HQ - Site Structures
Job Location: Bowling Green, KY
Contractor: Scotty's Contracting & Stone, LLC

Plant: Beaver Dam
8/11/2026 9:22:31 AM

Tech: S. Felletter
PC: M. Sullivan

Structure ID: DBI-16

P2 BX3648-08R48 BOX RISER 8inW F/G

P4) 24" x 30" - CASTING HEIGHT - 3.50"	0 lb
P3) 36" x 48" - CB FLAT TOP 8"W w/24"x30" HOLE F/F - 8"	1751 lb
P2) 36" x 48" - BOX RISER 8inW F/G - 48"	6444 lb
P1) 36" x 48" - BOX BASE 8inW, 8inF T/n - 60"	8280 lb
1) CASTING - HOE KY-460-11 F/G (DBI 11)	421 lb
2) 36" x 48" - Conseal CS-102 1.00"	0 lb
1) 24" x 30" - Conseal CS-102 1.00"	0 lb
1) Hole - 50	0 lb
1) Hole - 44	0 lb
5) MH Step ML-10-TDS-NCR - 10"	0 lb
Structure Total:	16896 lb

Structure Notes: .
1. PER ASTM C913 SPECIFICATIONS.
2. CONCRETE = 4,000 PSI AT 28 DAYS.
3. CASTING BY ICAST (HOE KY-460-11 F/G).
.
REINFORCING PER ASTM A615 (GRADE 60).
- TOP SLAB (As .62) #5 BARS AT 6" C.C.E.W..
- WALLS (As .31) #5 BARS AT 12" C.C.E.W.
- FLOOR (As .31) #5 BARS AT 12" C.C.E.W.

Rim: 591' Rim to Invert: 9.99' Slack: 0.38" Sump: 0" Step Position: 0°

Position	Elev	Angle	Ext. (cw)	Pipe	Pipe OD	Connector	Hole	Horz Size	Up (_)	Offset
Invert 1										
Invert 2										
Invert 3										
Invert 4										
Invert 5										
Invert 6										
Invert 7										
Invert 8										

RIGHT-SIDE UP VIEW (int. dimensions)

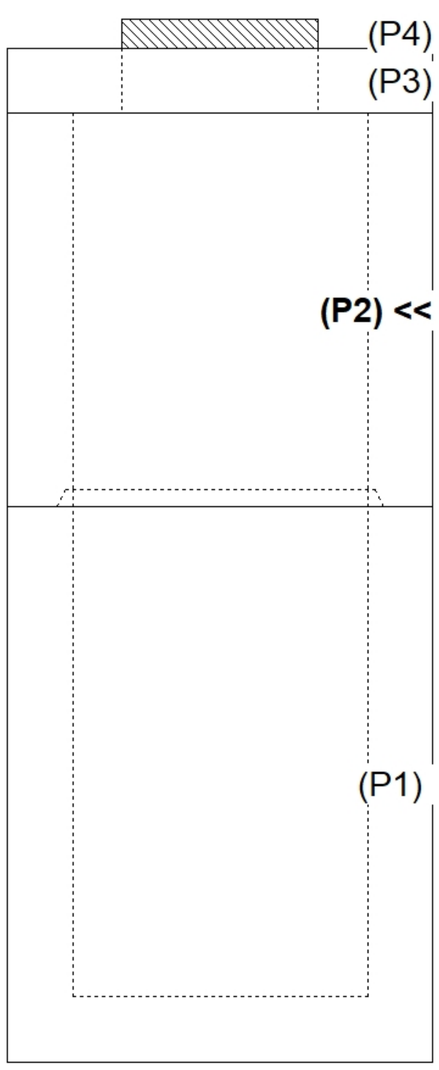

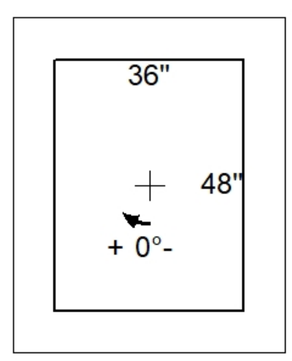

INSIDE WALL DIMENSIONS

(P2)

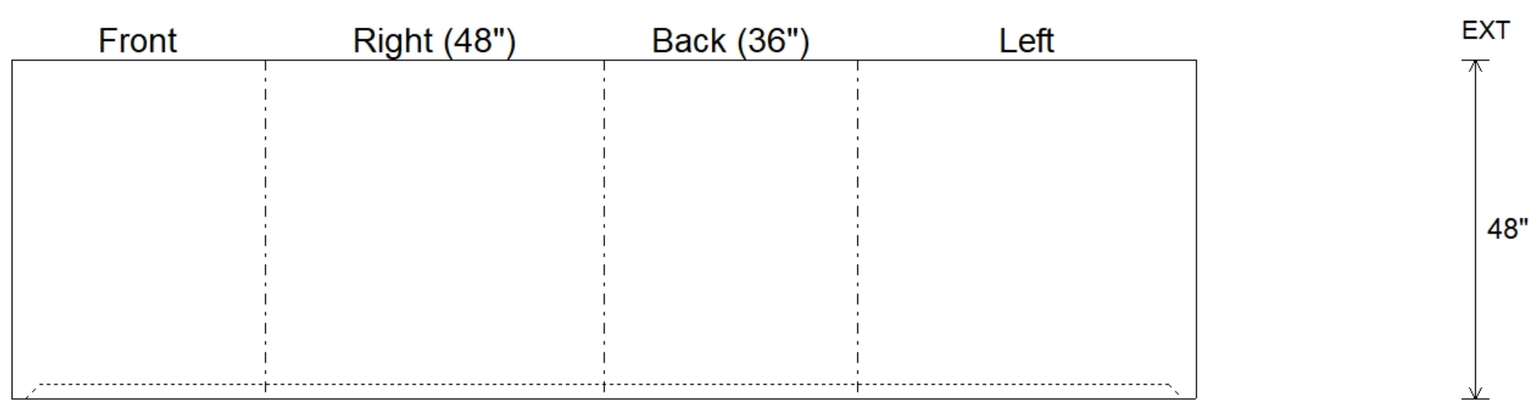

Coating (Int): Coating (Ext):	Seam Up: Flat Seam Dn: Groove	Wall Thickness: 8" Floor Height: 0"	Height (Int): 48" Height (Ext): 48"	Weight (Net): 6444 lb Volume (Net): 1.65cu.yd

Job Name: 24-4208 - KYTC Christian Co. Call 100 (ID 241018) Job Location: Hopkinsville, KY Contractor: Scotty's Contracting & Stone, LLC	Plant: Beaver Dam 7/30/2026 8:59:18 AM	Tech: J. Horsley PC: C. Goff	

Structure ID: 264 (434+55 RT)

P3 BX2436-08R18 BOX RISER 8inW T/G

P7) 24" x 120" - CB INLET KY A 10' TOP LEFT F/G - 10"	3400 lb
P6) 24" x 120" - CB INLET KY A 10' BOTTOM LEFT T/G - 18"	5270 lb
P5) 24" x 36" - FIELD ADJUSTMENT - 4.5"	0 lb
P4) 24" x 36" - BOX RISER 8inW F/G - 48"	4668 lb
P3) 24" x 36" - BOX RISER 8inW T/G - 18"	1837 lb
P2) 36" x 48" - CB FT REDUCER 24"X36" HOLE T/F - 8"	1654 lb
P1) 36" x 48" - BOX BASE 8inW, 8inF F/n - 60"	8248 lb
1) CASTING - HOE KY-206 F/C (KY TY1)	206 lb
1) 36" x 48" - Conseal CS-102 1.00"	0 lb
3) 24" x 36" - Conseal CS-102 1.00"	0 lb
2) Hole - 44	0 lb
1) Hole - 20	0 lb
1) Hole - 6	0 lb

Structure Total:	25282 lb

Rim: 546.62' Rim to Invert: 13.91' Slack: 0.42" Sump: 0" Step Position:

Structure Notes: .
** KYTC STATE PROJECT **
1. PER KYTC CBI TYPE A / ASTM C913 SPEC'S.
2. CONCRETE = 4,000 PSI AT 28 DAYS.
3. HOE KY-206 F/C CAST INTO TOP SLAB.
.
REINFORCING PER ASTM A615 (GRADE 60).
- TOP PHASE (As .62) #5 BARS AT 6" C.C.E.W.
- TRANS. SLAB (As .62) #5 BARS AT 6" C.C.E.W (DBL MAT)
- WALLS (As .31) #5 BARS AT 12" C.C.E.W.
- FLOOR (As .31) #5 BARS AT 12" C.C.E.W.

Position	Elev	Angle	Ext. (cw)	Pipe	Pipe OD	Connector	Hole	Horz Size	Up (_)	Offset
Invert 1										
Invert 2										
Invert 3										
Invert 4										
Invert 5										
Invert 6										
Invert 7										
Invert 8										

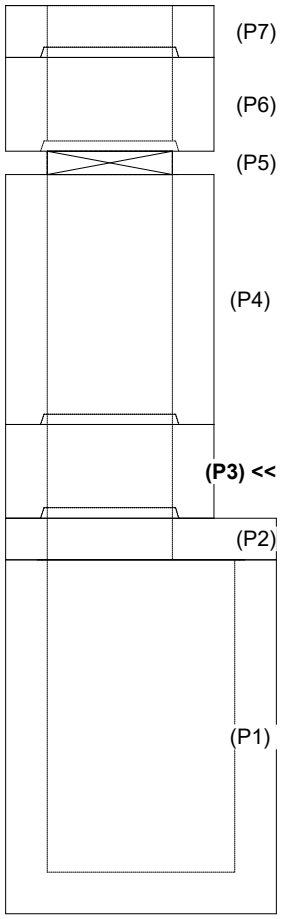

RIGHT-SIDE UP VIEW (int. dimensions)

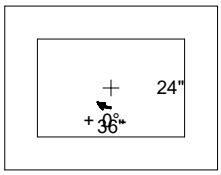

INSIDE WALL DIMENSIONS

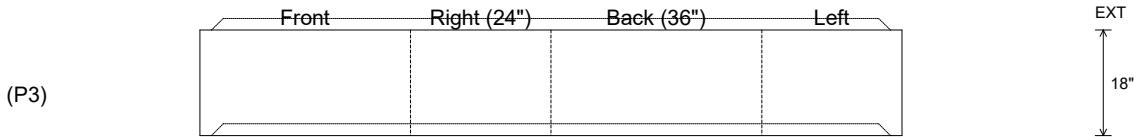

Coating (Int): Coating (Ext):	Seam Up: Tongue Seam Dn: Groove	Wall Thickness: 8" Floor Height: 0"	Height (Int): 18" Height (Ext): 18"	Weight (Net): 1837 lb Volume (Net): 0.47cu.yd

Job Name: 24-4208 - KYTC Christian Co. Call 100 (ID 241018) Job Location: Hopkinsville, KY Contractor: Scotty's Contracting & Stone, LLC	Plant: Beaver Dam 7/30/2026 8:59:19 AM	Tech: J. Horsley PC: C. Goff	

Structure ID: 264 (434+55 RT)

P4 BX2436-08R48 BOX RISER 8inW F/G

P7) 24" x 120" - CB INLET KY A 10' TOP LEFT F/G - 10"	3400 lb
P6) 24" x 120" - CB INLET KY A 10' BOTTOM LEFT T/G - 18"	5270 lb
P5) 24" x 36" - FIELD ADJUSTMENT - 4.5"	0 lb
P4) 24" x 36" - BOX RISER 8inW F/G - 48"	4668 lb
P3) 24" x 36" - BOX RISER 8inW T/G - 18"	1837 lb
P2) 36" x 48" - CB FT REDUCER 24"X36" HOLE T/F - 8"	1654 lb
P1) 36" x 48" - BOX BASE 8inW, 8inF F/n - 60"	8248 lb
1) CASTING - HOE KY-206 F/C (KY TY1)	206 lb
1) 36" x 48" - Conseal CS-102 1.00"	0 lb
3) 24" x 36" - Conseal CS-102 1.00"	0 lb
2) Hole - 44	0 lb
1) Hole - 20	0 lb
1) Hole - 6	0 lb

Structure Total:	25282 lb

Structure Notes: .
** KYTC STATE PROJECT **
1. PER KYTC CBI TYPE A / ASTM C913 SPEC'S.
2. CONCRETE = 4,000 PSI AT 28 DAYS.
3. HOE KY-206 F/C CAST INTO TOP SLAB.
.
REINFORCING PER ASTM A615 (GRADE 60).
- TOP PHASE (As .62) #5 BARS AT 6" C.C.E.W.
- TRANS. SLAB (As .62) #5 BARS AT 6" C.C.E.W (DBL MAT)
- WALLS (As .31) #5 BARS AT 12" C.C.E.W.
- FLOOR (As .31) #5 BARS AT 12" C.C.E.W.

Rim: 546.62' Rim to Invert: 13.91' Slack: 0.42" Sump: 0" Step Position:

Position	Elev	Angle	Ext. (cw)	Pipe	Pipe OD	Connector	Hole	Horz Size	Up (_)	Offset
Invert 1										
Invert 2	540.97'	0°	20"	15" HDPE	17.6"	Hole 20	20"	20"	9.82"	0"
Invert 3										
Invert 4	542.83'	270°	26"	4" HDPE (perf pipe)	4.8"	Hole 6	6"	6"	33.04"	0"
Invert 5										
Invert 6										
Invert 7										
Invert 8										

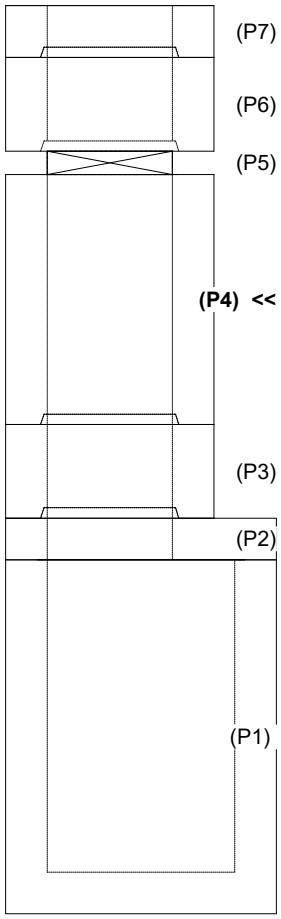

RIGHT-SIDE UP VIEW (int. dimensions)

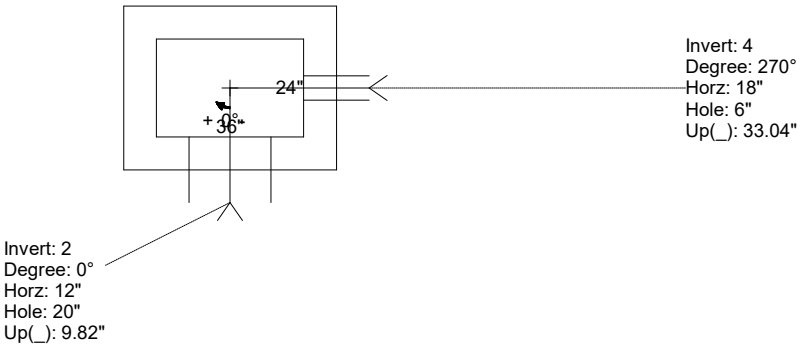

INSIDE WALL DIMENSIONS

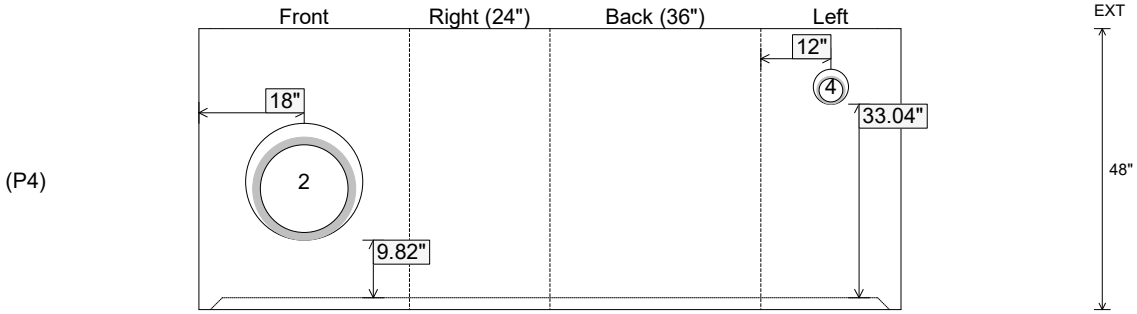

Coating (Int): Coating (Ext):	Seam Up: Flat Seam Dn: Groove	Wall Thickness: 8" Floor Height: 0"	Height (Int): 48" Height (Ext): 48"	Weight (Net): 4668 lb Volume (Net): 1.19cu.yd

Job Name: 24-4208 - KYTC Christian Co. Call 100 (ID 241018) Job Location: Hopkinsville, KY Contractor: Scotty's Contracting & Stone, LLC	Plant: Beaver Dam 7/30/2026 8:59:16 AM	Tech: J. Horsley PC: C. Goff	

Structure ID: 258 (431+50 RT)

P3 BX2436-08R24 BOX RISER 8inW F/G

P6) 24" x 120" - CB INLET KY A 10' TOP RIGHT F/G - 10"	3398 lb
P5) 24" x 120" - CB INLET KY A 10' BOTTOM RIGHT T/G - 18"	5270 lb
P4) 24" x 36" - FIELD ADJUSTMENT - 4.5"	0 lb
P3) 24" x 36" - BOX RISER 8inW F/G - 24"	2430 lb
P2) 48" x 48" - CB FT REDUCER 24"X36" HOLE T/F - 8"	2170 lb
P1) 48" x 48" - BOX BASE 8inW, 8inF, Variable Ht F/n - 49"	7572 lb
1) CASTING - HOE KY-206 F/C (KY TY1)	206 lb
1) 48" x 48" - Conseal CS-102 1.00"	0 lb
3) 24" x 36" - Conseal CS-102 1.00"	0 lb
2) Hole - 44	0 lb
1) Hole - 26	0 lb
1) Hole - 6	0 lb

Structure Total:	21046 lb

Structure Notes: .
** KYTC STATE PROJECT **
1. PER KYTC CBI TYPE A / ASTM C913 SPEC'S.
2. CONCRETE = 4,000 PSI AT 28 DAYS.
3. HOE KY-206 F/C CAST INTO TOP SLAB.
.
REINFORCING PER ASTM A615 (GRADE 60).
- TOP PHASE (As .62) #5 BARS AT 6" C.C.E.W.
- TRANS. SLAB (As .62) #5 BARS AT 6" C.C.E.W (DBL MAT)
- WALLS (As .31) #5 BARS AT 12" C.C.E.W.
- FLOOR (As .31) #5 BARS AT 12" C.C.E.W.

Rim: 542.93' Rim to Invert: 9.46' Slack: 0.02" Sump: 0" Step Position:

Position	Elev	Angle	Ext. (cw)	Pipe	Pipe OD	Connector	Hole	Horz Size	Up (_)	Offset
Invert 1										
Invert 2										
Invert 3										
Invert 4	539.25'	270°	26"	4" HDPE (perf pipe)	4.8"	Hole 6	6"	6"	9.96"	0"
Invert 5										
Invert 6										
Invert 7										
Invert 8										

RIGHT-SIDE UP VIEW (int. dimensions)

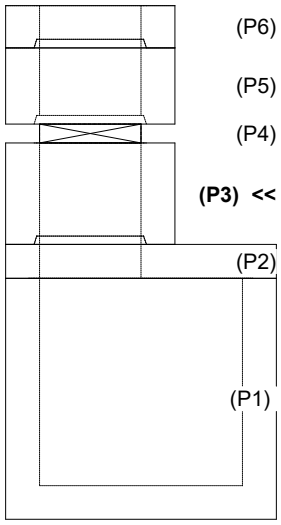

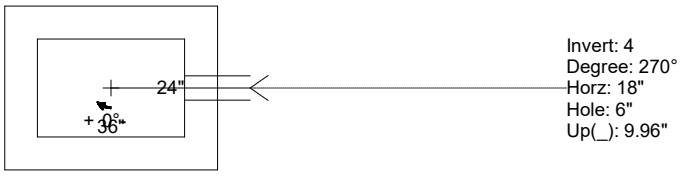

INSIDE WALL DIMENSIONS

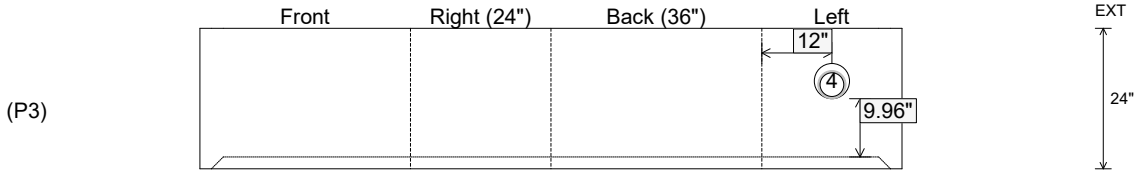

Coating (Int): Coating (Ext):	Seam Up: Flat Seam Dn: Groove	Wall Thickness: 8" Floor Height: 0"	Height (Int): 24" Height (Ext): 24"	Weight (Net): 2430 lb Volume (Net): 0.62cu.yd

Job Name: 26-1077 - Westside Markets of Greensboro Village Job Location: Gallatin, TN Contractor: Cleary Construction, Inc.	Plant: 100 8/11/2026 9:57:53 AM	Tech: J. Coppage - F PC: C. Goff	

Structure ID: B5

P1 BX2436-08BA48 BOX BASE 8inW, 8inF

P2) 24" x 36" - CASTING HEIGHT - 5"	0 lb
P1) 24" x 36" - BOX BASE 8inW, 8inF - 48"	5497 lb
1) 24" x 36" - STORM INVERT CHANNEL (FLAT) - 4" THK	450 lb
1) CASTING - EJ 6499 Beehive Grate	250 lb
1) 24" x 36" - Conseal CS-102 1.00"	0 lb
1) Hole - 30	0 lb
1) Hole - 24	0 lb
1) Hole - 6	0 lb

Structure Total:	6197 lb

Structure Notes:
1. PER ASTM C913 SPECIFICATIONS.
2. CONCRETE = 4,000 PSI AT 28 DAYS.
3. NO STEPS.
4. CASTING SUPPLIED BY I-CAST (EJ 6499).
REINFORCING PER ASTM A615 (GRADE 60).
- WALLS (As .12) #5 BARS AT 12" C.C.E.W.
- FLOOR (As .12) #5 BARS AT 12" C.C.E.W.

Rim: 497' Rim to Invert: 4.48' Slack: 0.76" Sump: 0" Step Position:

Position	Elev	Angle	Ext. (cw)	Pipe	Pipe OD	Connector	Hole	Horz Size	Up (_)	Offset
Invert 1	492.52'	270°	26"	24" HDPE	27.8"	Hole 30	30"	30"	-1.9"	0"
Invert 2	492.62'	90°	26"	18" HDPE	21.2"	Hole 24	24"	24"	-0.4"	0"
Invert 3	493'	180°	20"	4" HDPE (perf pipe)	4.8"	Hole 6	6"	6"	5.36"	0"
Invert 4										
Invert 5										
Invert 6										
Invert 7										
Invert 8										

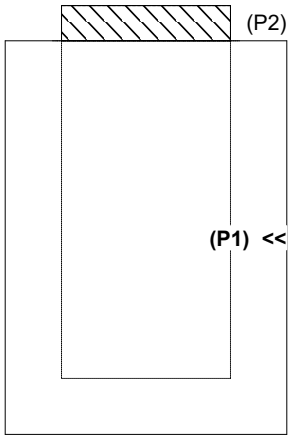

RIGHT-SIDE UP VIEW (int. dimensions)

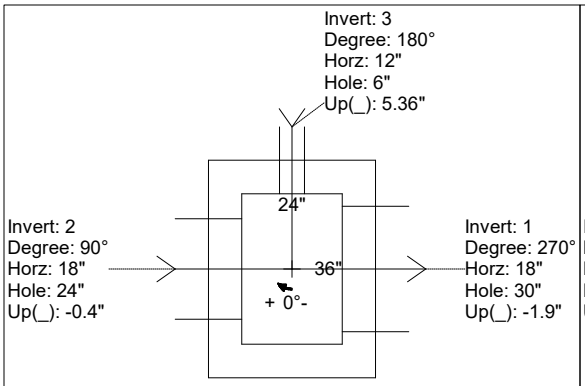

UPSIDE-DOWN VIEW (int. dimenions)

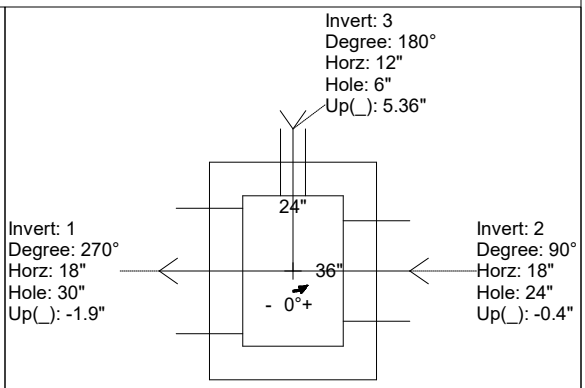

INSIDE WALL DIMENSIONS

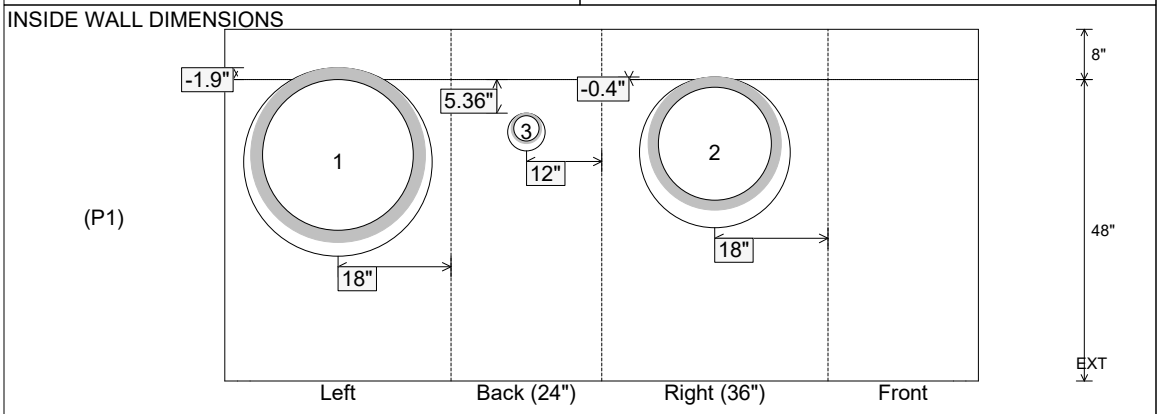

Coating (Int): Coating (Ext):	Seam Up: Flat Seam Dn: n/a	Wall Thickness: 8" Floor Height: 8"	Height (Int): 48" Height (Ext): 56"	Weight (Net): 5497 lb Volume (Net): 1.4cu.yd

Job Name: 25-1684P14 KYTC Jefferson Co. Call 200 (251007) Job Location: I-264 Louisville, Ky. Contractor: Cleary Construction, Inc.	Plant: Beaver Dam, KY 8/6/2026 12:00:29 PM	Tech: J. Coppage PC: T. Ryan	

Structure ID: 22+18 CBBI-MOD B1

P1 BX2436-08BVF BOX BASE 8inW, 8inF, Variable Ht

P3) 24" x 120" - CASTING (cast in) - 3"	0 lb
P2) 24" x 120" - CB MED BAR BOX INLET 9B1 LH - 17"	4000 lb
P1) 24" x 36" - BOX BASE 8inW, 8inF, Variable Ht - 29"	4100 lb
1) 24" x 36" - Conseal CS-102 1.00"	0 lb
1) Hole - 22	0 lb
Structure Total:	8100 lb

Structure Notes: .
-KYTC STATE PROJECT 251007
-REINFORCING: #5 BAR @ 12" C/C E.W. (TYP.)
-CASTING FRAMES & GRATES BY OTHERS.
-CS-102 BUTYL REQUIRED (SUPPLIED BY ICAST).
-KYTC CERTIFICATIONS REQUIRED.

Rim: 563.16' Rim to Invert: 4.2' Slack: 4.4" Sump: 0" Step Position:

Position	Elev	Angle	Ext. (cw)	Pipe	Pipe OD	Connector	Hole	Horz Size	Up (_)	Offset
Invert 1	558.96'	0°	20"	18" CMP	19"	Hole 22	22"	22"	-2"	0"
Invert 2										
Invert 3										
Invert 4										
Invert 5										
Invert 6										
Invert 7										
Invert 8										

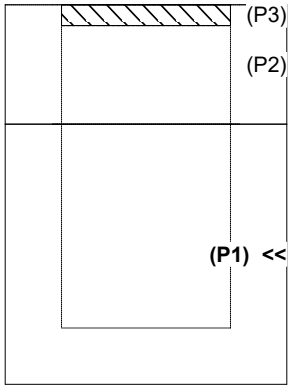

RIGHT-SIDE UP VIEW (int. dimensions)

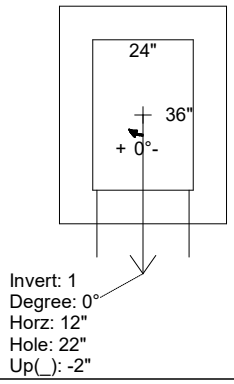

UPSIDE-DOWN VIEW (int. dimenions)

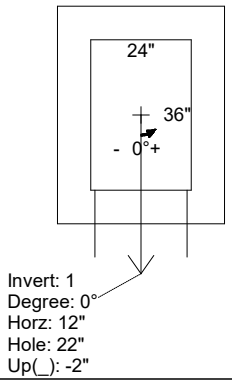

INSIDE WALL DIMENSIONS

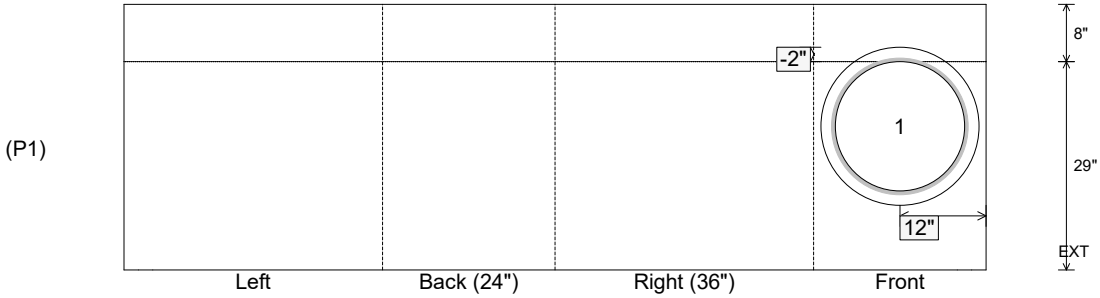

Coating (Int): Coating (Ext):	Seam Up: Flat Seam Dn: n/a	Wall Thickness: 8" Floor Height: 8"	Height (Int): 29" Height (Ext): 37"	Weight (Net): 4100 lb Volume (Net): 1.05cu.yd

Job Name: 25-1684P14 KYTC Jefferson Co. Call 200 (251007) Job Location: I-264 Louisville, Ky. Contractor: Cleary Construction, Inc.	Plant: Beaver Dam, KY 8/6/2026 2:12:00 PM	Tech: J. Coppage PC: T. Ryan	

Structure ID: 5090+98 RT CBBI-MOD B1

P1 BX3636-08BAVF BOX BASE 8inW, 8inF, Variable Ht

P4) 24" x 120" - CASTING (cast in) - 3"	0 lb
P3) 24" x 120" - CB MED BAR BOX INLET 9B1 RH - 17"	4000 lb
P2) 36" x 36" - CB FT REDUCER 24"X36" HOLE-FT - 8"	1235 lb
P1) 36" x 36" - BOX BASE 8inW, 8inF, Variable Ht - 36"	5046 lb
1) 36" x 36" - Conseal CS-102 1.00"	0 lb
1) 24" x 36" - Conseal CS-102 1.00"	0 lb
1) Hole - 34	0 lb
1) Hole - 28	0 lb
Structure Total:	10281 lb

Structure Notes: .
-KYTC STATE PROJECT 251007
-REINFORCING: #5 BAR @ 12" C/C E.W. (TYP.)
-CASTING FRAMES & GRATES BY OTHERS.
-CS-102 BUTYL REQUIRED (SUPPLIED BY ICAST).
-KYTC CERTIFICATIONS REQUIRED.

Rim: 584.26' Rim to Invert: 5' Slack: 0" Sump: 1" Step Position:

Position	Elev	Angle	Ext. (cw)	Pipe	Pipe OD	Connector	Hole	Horz Size	Up (_)	Offset
Invert 1	579.26'	0°	26"	24" RCP B WALL	30"	Hole 34	34"	34"	-4"	0"
Invert 2	579.26'	180°	26"	24" CMP	25"	Hole 28	28"	28"	-1"	0"
Invert 3										
Invert 4										
Invert 5										
Invert 6										
Invert 7										
Invert 8										

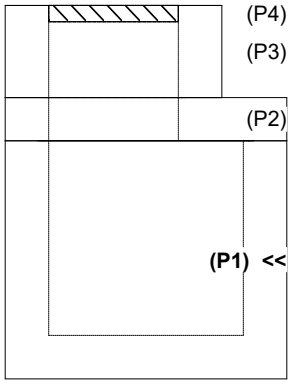

RIGHT-SIDE UP VIEW (int. dimensions)

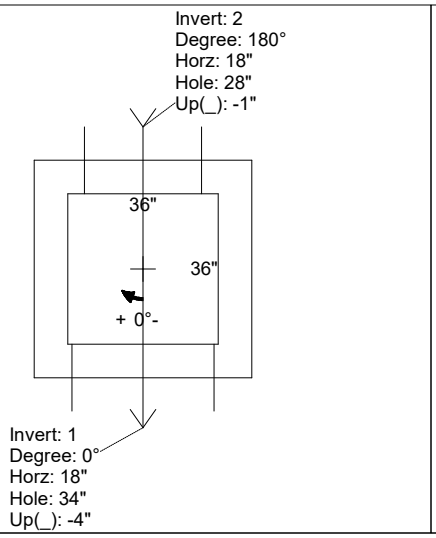

UPSIDE-DOWN VIEW (int. dimenions)

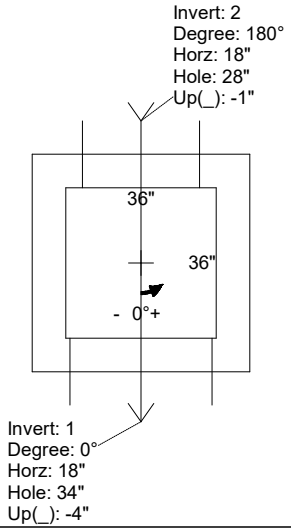

INSIDE WALL DIMENSIONS

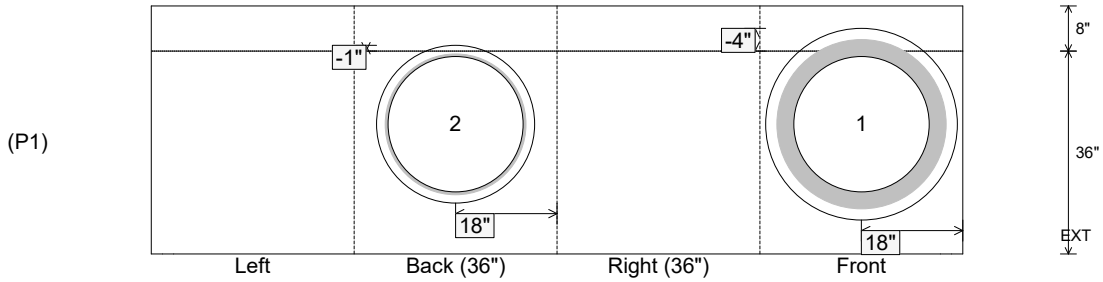

Coating (Int): Coating (Ext):	Seam Up: Flat Seam Dn: n/a	Wall Thickness: 8" Floor Height: 8"	Height (Int): 36" Height (Ext): 44"	Weight (Net): 5046 lb Volume (Net): 1.29cu.yd

Job Name: 25-1684P14 KYTC Jefferson Co. Call 200 (251007) Job Location: I-264 Louisville, Ky. Contractor: Cleary Construction, Inc.	Plant: Beaver Dam, KY 8/4/2026 11:26:30 AM	Tech: J. Coppage PC: T. Ryan	

Structure ID: 5084+83 RT CBBI-MOD B1

P1 BX2436-08BVF **BOX BASE 8inW, 8inF, Variable Ht**

P3) 24" x 120" - CASTING (cast in) - 3"	0 lb
P2) 24" x 120" - CB MED BAR BOX INLET 9B1 RH - 17"	4000 lb
P1) 24" x 36" - BOX BASE 8inW, 8inF, Variable Ht - 26"	3878 lb
1) 24" x 36" - Conseal CS-102 1.00"	0 lb
1) Hole - 18	0 lb
Structure Total:	7878 lb

Structure Notes: .
-KYTC STATE PROJECT 251007
-REINFORCING: #5 BAR @ 12" C/C E.W. (TYP.)
-CASTING FRAMES & GRATES BY OTHERS.
-CS-102 BUTYL REQUIRED (SUPPLIED BY ICAST).
-KYTC CERTIFICATIONS REQUIRED.

Rim: 581.84' Rim to Invert: 3.9' Slack: 3.8" Sump: 0" Step Position:

Position	Elev	Angle	Ext. (cw)	Pipe	Pipe OD	Connector	Hole	Horz Size	Up (_)	Offset
Invert 1	577.94'	0°	20"	15" CMP	16"	Hole 18	18"	18"	-1.5"	0"
Invert 2										
Invert 3										
Invert 4										
Invert 5										
Invert 6										
Invert 7										
Invert 8										

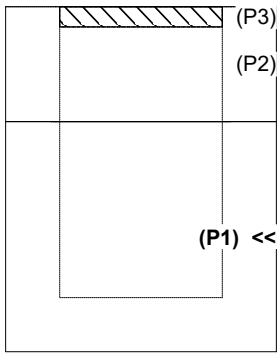

RIGHT-SIDE UP VIEW (int. dimensions)

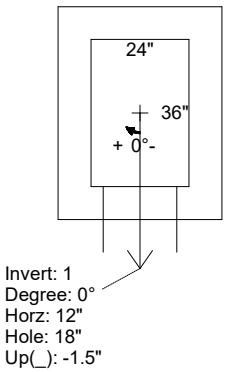

UPSIDE-DOWN VIEW (int. dimenions)

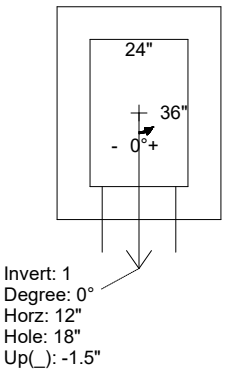

INSIDE WALL DIMENSIONS

Coating (Int): Coating (Ext):	Seam Up: Flat Seam Dn: n/a	Wall Thickness: 8" Floor Height: 8"	Height (Int): 26" Height (Ext): 34"	Weight (Net): 3878 lb Volume (Net): 0.99cu.yd

Job Name: 24-4208 - KYTC Christian Co. Call 100 (ID 241018) Job Location: Hopkinsville, KY Contractor: Scotty's Contracting & Stone, LLC	Plant: Beaver Dam 7/30/2026 8:55:34 AM	Tech: J. Horsley PC: C. Goff	

Structure ID: 251 (429+13 LT)

P1 BX2436-08BVF **BOX BASE 8inW, 8inF, Variable Ht F/n**

P4) 24" x 120" - CB INLET KY A 10' TOP LEFT F/G - 10"	3400 lb
P3) 24" x 120" - CB INLET KY A 10' BOTTOM LEFT T/G - 18"	5270 lb
P2) 24" x 36" - FIELD ADJUSTMENT - 3"	0 lb
P1) 24" x 36" - BOX BASE 8inW, 8inF, Variable Ht F/n - 26"	3431 lb
1) CASTING - HOE KY-206 F/C (KY TY1)	206 lb
2) 24" x 36" - Conseal CS-102 1.00"	0 lb
3) Hole - 20	0 lb
1) Hole - 6	0 lb
Structure Total:	12306 lb

Structure Notes: .
** KYTC STATE PROJECT **
1. PER KYTC CBI TYPE A / ASTM C913 SPEC'S.
2. CONCRETE = 4,000 PSI AT 28 DAYS.
3. HOE KY-206 F/C CAST INTO TOP SLAB.
.
REINFORCING PER ASTM A615 (GRADE 60).
- TOP PHASE (As .62) #5 BARS AT 6" C.C.E.W.
- WALLS (As .31) #5 BARS AT 12" C.C.E.W.
- FLOOR (As .31) #5 BARS AT 12" C.C.E.W.

Rim: 541.53' Rim to Invert: 4.75' Slack: 0" Sump: 0" Step Position:

Position	Elev	Angle	Ext. (cw)	Pipe	Pipe OD	Connector	Hole	Horz Size	Up (_)	Offset
Invert 1	536.78'	0°	20"	15" HDPE	17.6"	Hole 20	20"	20"	-1.3"	0"
Invert 2	536.78'	90°	26"	15" HDPE	17.6"	Hole 20	20"	20"	-1.3"	0"
Invert 3	536.78'	180°	20"	15" HDPE	17.6"	Hole 20	20"	20"	-1.3"	0"
Invert 4	538.23'	180°	11"	4" HDPE (perf pipe)	4.8"	Hole 6	6"	6"	17"	-9"
Invert 5										
Invert 6										
Invert 7										
Invert 8										

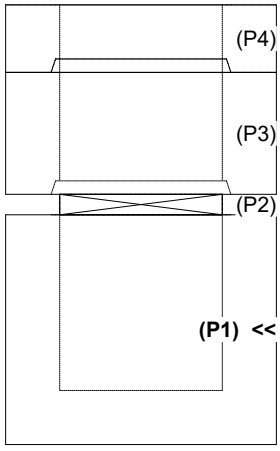

RIGHT-SIDE UP VIEW (int. dimensions)

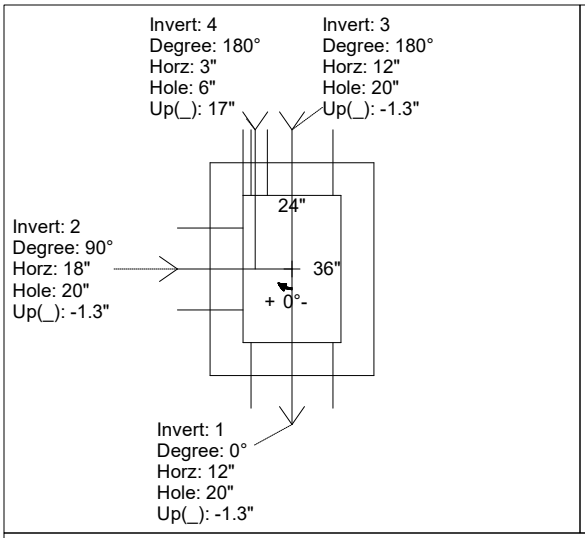

UPSIDE-DOWN VIEW (int. dimenions)

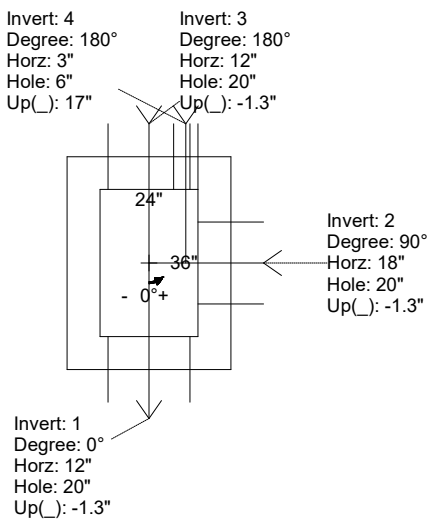

INSIDE WALL DIMENSIONS

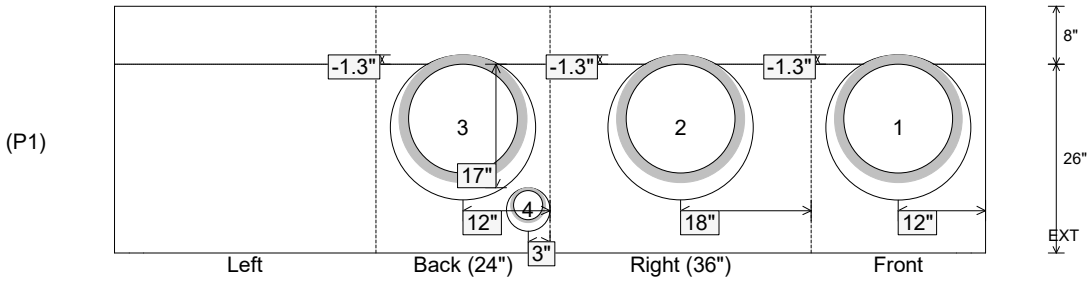

Coating (Int): Coating (Ext):	Seam Up: Flat Seam Dn: n/a	Wall Thickness: 8" Floor Height: 8"	Height (Int): 26" Height (Ext): 34"	Weight (Net): 3431 lb Volume (Net): 0.88cu.yd

Job Name: 24-4208 - KYTC Christian Co. Call 100 (ID 241018) Job Location: Hopkinsville, KY Contractor: Scotty's Contracting & Stone, LLC	Plant: Beaver Dam 7/30/2026 8:55:35 AM	Tech: J. Horsley PC: C. Goff	

Structure ID: 252 (429+39 RT)

P1 BX3648-08BA48 BOX BASE 8inW, 8inF F/n

P5) 24" x 120" - CB INLET KY A 10' TOP RIGHT F/G - 10"	3398 lb
P4) 24" x 120" - CB INLET KY A 10' BOTTOM RIGHT T/G - 18"	5270 lb
P3) 24" x 36" - FIELD ADJUSTMENT - 4.5"	0 lb
P2) 36" x 48" - CB FT REDUCER 24"X36" HOLE T/F - 8"	1654 lb
P1) 36" x 48" - BOX BASE 8inW, 8inF F/n - 48"	6689 lb
1) CASTING - HOE KY-206 F/C (KY TY1)	206 lb
1) 36" x 48" - Conseal CS-102 1.00"	0 lb
2) 24" x 36" - Conseal CS-102 1.00"	0 lb
2) Hole - 44	0 lb
1) Hole - 6	0 lb
Structure Total:	17217 lb

Structure Notes: .
** KYTC STATE PROJECT **
1. PER KYTC CBI TYPE A / ASTM C913 SPEC'S.
2. CONCRETE = 4,000 PSI AT 28 DAYS.
3. HOE KY-206 F/C CAST INTO TOP SLAB.
.
REINFORCING PER ASTM A615 (GRADE 60).
- TOP PHASE (As .62) #5 BARS AT 6" C.C.E.W.
- TRANS. SLAB (As .62) #5 BARS AT 6" C.C.E.W (DBL MAT)
- WALLS (As .31) #5 BARS AT 12" C.C.E.W.
- FLOOR (As .31) #5 BARS AT 12" C.C.E.W.

Rim: 541.63' Rim to Invert: 7.4' Slack: 0.3" Sump: 0" Step Position:

Position	Elev	Angle	Ext. (cw)	Pipe	Pipe OD	Connector	Hole	Horz Size	Up (_)	Offset
Invert 1	534.23'	270°	32"	36" HDPE	41.7"	Hole 44	44"	44"	-2.85"	0"
Invert 2	534.23'	90°	32"	36" HDPE	41.7"	Hole 44	44"	44"	-2.85"	0"
Invert 3	537.425'	270°	11"	4" HDPE (perf pipe)	4.8"	Hole 6	6"	6"	37.94"	-21"
Invert 4										
Invert 5										
Invert 6										
Invert 7										
Invert 8										

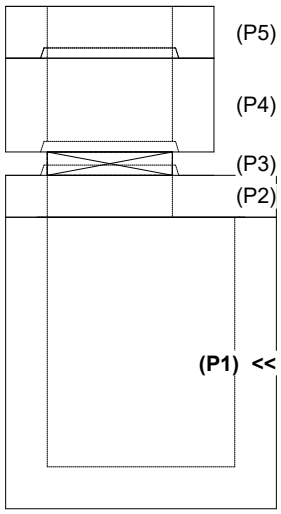

RIGHT-SIDE UP VIEW (int. dimensions)

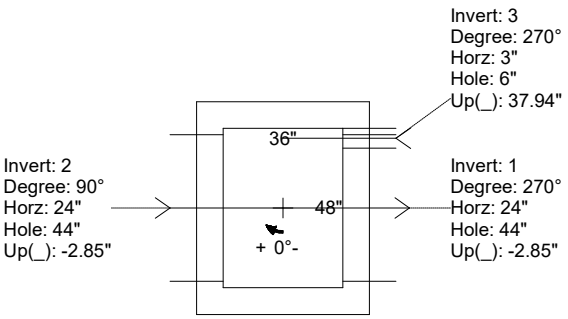

UPSIDE-DOWN VIEW (int. dimenions)

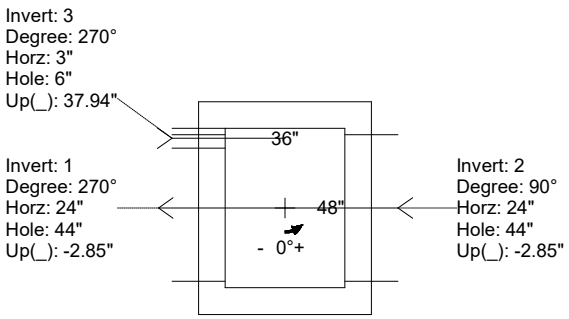

INSIDE WALL DIMENSIONS

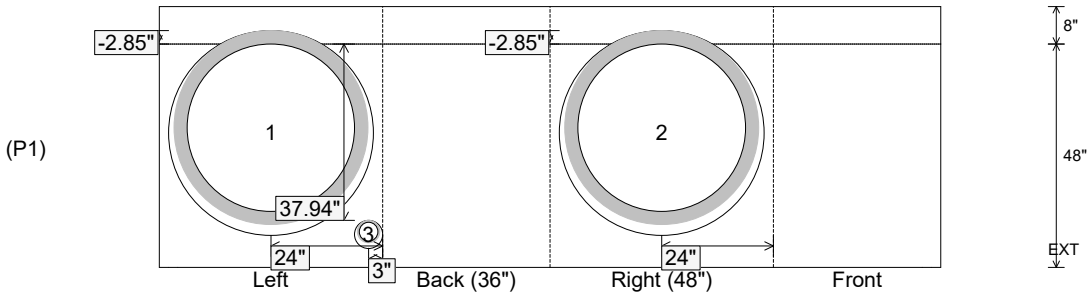

Coating (Int): Coating (Ext):	Seam Up: Flat Seam Dn: n/a	Wall Thickness: 8" Floor Height: 8"	Height (Int): 48" Height (Ext): 56"	Weight (Net): 6689 lb Volume (Net): 1.71cu.yd

Job Name: 24-4208 - KYTC Christian Co. Call 100 (ID 241018) Job Location: Hopkinsville, KY Contractor: Scotty's Contracting & Stone, LLC	Plant: Beaver Dam 8/3/2026 3:41:03 PM	Tech: J. Horsley PC: C. Goff	

Structure ID: MH277 (439+85 RT)

P1 BX4848-08W12FEBAVF BX BASE w/FLANGE 08W/12F/08EF F/n

P4) 24" - CASTING HEIGHT - 8"	0 lb
P3) 48" - ECC CONE w/ 24" HOLE F/G - 36"	3000 lb
P2) 48" x 48" - CB FT REDUCER 48" HOLE T/F - 8"	1535 lb
P1) 48" x 48" - BX BASE w/FLANGE 08W/12F/08EF F/n - 60"	13214 lb
1) CASTING - HOE KY-510 F/C (KY TY.2)	510 lb
1) 48" x 48" - Conseal CS-102 1.00"	0 lb
1) 48" - Conseal CS-102 1.00"	0 lb
1) 24" - Conseal CS-102 1.00"	0 lb
2) Hole - 44	0 lb
1) Hole - 20	0 lb
Structure Total:	18259 lb

First pour drawing
First pour weight = 10,894 LBS
Second pour weight = 2,320 LBS

Structure Notes: .
** KYTC STATE PROJECT**
1. PER KYTC MANHOLE TYPE C / ASTM C913 SPEC'S.
2. CONCRETE = 4,000 PSI AT 28 DAYS.
3. CASTING BY ICAST (HOE KY-510 F/C)
4. SECONDARY POUR REQ'D FOR EXTENDED FLANGE (8"WD x 12" THICK).
.
REINFORCING PER ASTM A615 (GRADE 60).
- TRANS. SLAB #5's AT 6" C.C.E.W (DBL MAT).
- WALLS #5's AT 6" C.C.E.W.
- FLOOR #5's AT 12" C.C.E.W..

Rim: 539.55' Rim to Invert: 9.41' Slack: 0.92" Sump: 0" Step Position: 90°

Position	Elev	Angle	Ext. (cw)	Pipe	Pipe OD	Connector	Hole	Horz Size	Up (_)	Offset
Invert 1	530.14'	180°	32"	36" HDPE	41.7"	Hole 44	44"	44"	-2.85"	0"
Invert 2	533.2'	270°	32"	15" HDPE	17.6"	Hole 20	20"	20"	35.42"	0"
Invert 3	530.14'	0°	32"	36" HDPE	41.7"	Hole 44	44"	44"	-2.85"	0"
Invert 4										
Invert 5										
Invert 6										
Invert 7										
Invert 8										

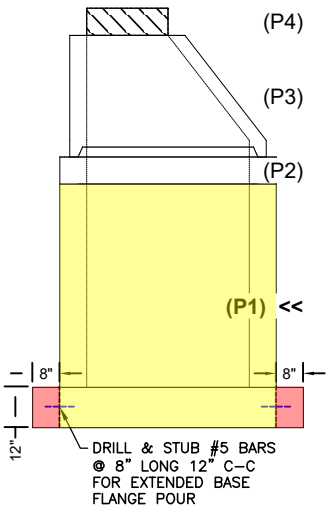

RIGHT-SIDE UP VIEW (int. dimensions)

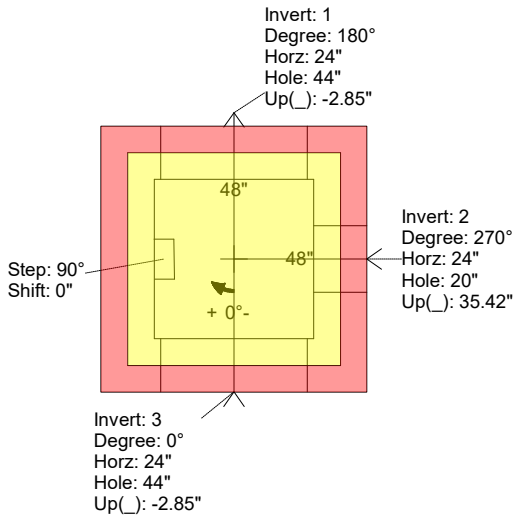

UPSIDE-DOWN VIEW (int. dimenions)

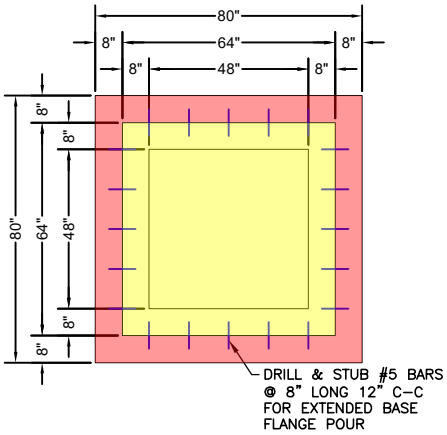

INSIDE WALL DIMENSIONS

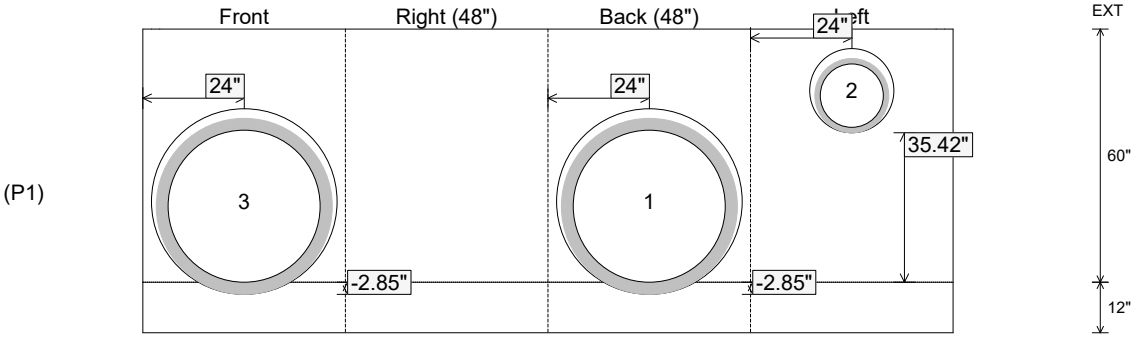

Coating (Int): Coating (Ext):	Seam Up: Flat Seam Dn: n/a	Wall Thickness: 8" Floor Height: 12"	Height (Int): 60" Height (Ext): 72"	Weight (Net): 13214 lb Volume (Net): 3.38cu.yd

Job Name: 24-4208 - KYTC Christian Co. Call 100 (ID 241018) Job Location: Hopkinsville, KY Contractor: Scotty's Contracting & Stone, LLC	Plant: Beaver Dam 8/3/2026 3:41:03 PM	Tech: J. Horsley PC: C. Goff	

Structure ID: MH277 (439+85 RT)

P1 BX4848-08W12FEBAVF BX BASE w/FLANGE 08W/12F/08EF F/n

P4) 24" - CASTING HEIGHT - 8"	0 lb
P3) 48" - ECC CONE w/ 24" HOLE F/G - 36"	3000 lb
P2) 48" x 48" - CB FT REDUCER 48" HOLE T/F - 8"	1535 lb
P1) 48" x 48" - BX BASE w/FLANGE 08W/12F/08EF F/n - 60"	13214 lb
1) CASTING - HOE KY-510 F/C (KY TY.2)	510 lb
1) 48" x 48" - Conseal CS-102 1.00"	0 lb
1) 48" - Conseal CS-102 1.00"	0 lb
1) 24" - Conseal CS-102 1.00"	0 lb
2) Hole - 44	0 lb
1) Hole - 20	0 lb
Structure Total:	18259 lb

Second pour drawing

First pour weight = 10,894 LBS

Second pour weight = 2,320 LBS

Structure Notes: .
** KYTC STATE PROJECT**
1. PER KYTC MANHOLE TYPE C / ASTM C913 SPEC'S.
2. CONCRETE = 4,000 PSI AT 28 DAYS.
3. CASTING BY ICAST (HOE KY-510 F/C)
4. SECONDARY POUR REQ'D FOR EXTENDED FLANGE (8"WD x 12" THICK).
.
REINFORCING PER ASTM A615 (GRADE 60).
- TRANS. SLAB #5's AT 6" C.C.E.W (DBL MAT).
- WALLS #5's AT 6" C.C.E.W.
- FLOOR #5's AT 12" C.C.E.W..

Rim: 539.55' Rim to Invert: 9.41' Slack: 0.92" Sump: 0" Step Position: 90°

Position	Elev	Angle	Ext. (cw)	Pipe	Pipe OD	Connector	Hole	Horz Size	Up (_)	Offset
Invert 1	530.14'	180°	32"	36" HDPE	41.7"	Hole 44	44"	44"	-2.85"	0"
Invert 2	533.2'	270°	32"	15" HDPE	17.6"	Hole 20	20"	20"	35.42"	0"
Invert 3	530.14'	0°	32"	36" HDPE	41.7"	Hole 44	44"	44"	-2.85"	0"
Invert 4										
Invert 5										
Invert 6										
Invert 7										
Invert 8										

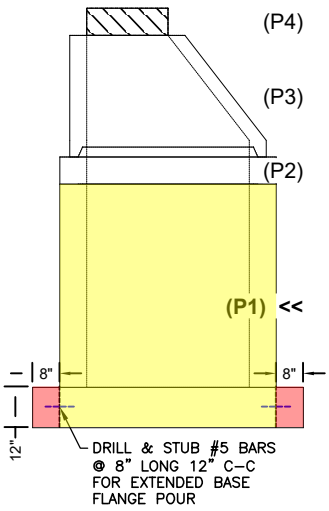

RIGHT-SIDE UP VIEW (int. dimensions)

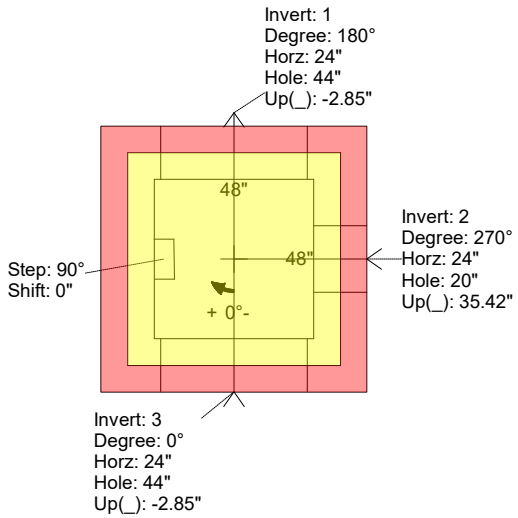

UPSIDE-DOWN VIEW (int. dimenions)

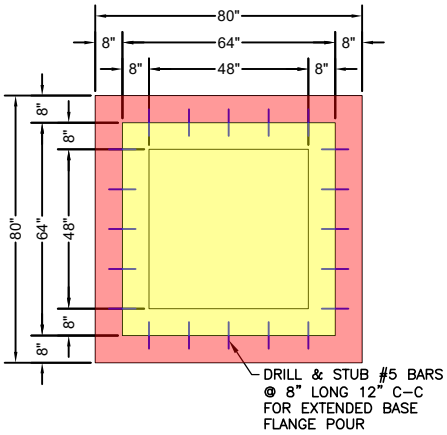

INSIDE WALL DIMENSIONS

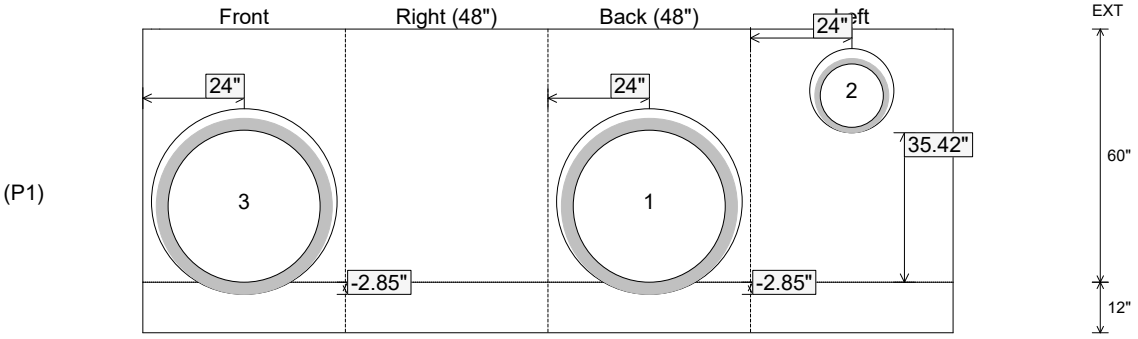

Coating (Int): Coating (Ext):	Seam Up: Flat Seam Dn: n/a	Wall Thickness: 8" Floor Height: 12"	Height (Int): 60" Height (Ext): 72"	Weight (Net): 13214 lb Volume (Net): 3.38cu.yd

Job Name: 25-3193 - KYTC Kenton Co Call 328 (251320) Job Location: Independence, KY Contractor: Eaton Asphalt	Plant: 100 7/1/2026 12:29:35 PM	Tech: Jared - A PC: J. Jarvis	

Structure ID: 468

P1 BX24300808VF **BOX BASE 8inW, 8inF, Variable Ht**

P3) 15" x 27" - P.I.P. - BY OTHERS - 8"	0 lb
P2) 24" x 30" - CB FLAT TOP 8"W w/15"x27" HOLE - 8"	963 lb
P1) 24" x 30" - BOX BASE 8inW, 8inF, Variable Ht - 40"	4607 lb
1) CASTING - HOE KY-230-G F/G (GRADE)	237 lb
1) 24" x 30" - Conseal CS-102 1.00"	0 lb
1) 15" x 27" - Conseal CS-102 1.00"	0 lb
1) Hole - 24	0 lb
2) Hole - 4	0 lb
Structure Total:	5807 lb

Structure Notes: .
KYTC STATE PROJECT
1. HOE KY-230-G F/G (GRADE) PROVIDED BY ICAST.
2. KYTC DBI TYPE 13G / ASTM C-913 SPEC'S.
3. CONCRETE = 4,000 PSI AT 28 DAYS.
4. REINFORCING PER ASTM A615 (GRADE 60).
- TOP SLAB (As .62) #5 BARS AT 6" C.C.E.W.
- WALLS (As .31) #5 BARS AT 12" C.C.E.W..
- FLOOR (As .31) #5 BARS AT 12" C.C.E.W.
5. STUB #5 BARS 12" OUT OF THE TOP OF THE SLAB

(SPACED AT 12" CC) AROUND THE 15" X 27" HOLE

Rim: 894.43' Rim to Invert: 4.67' Slack: 0.04" Sump: 0" Step Position:

Position	Elev	Angle	Ext. (cw)	Pipe	Pipe OD	Connector	Hole	Horz Size	Up (_)	Offset
Invert 1	889.76'	305°	28.703"	18" ADS N-12	22"	Hole 24	24"	29.299"	-3"	-6.8"
Invert 2	892.43'	90°	23"	4" WEEP HOLE	4"	Hole 4	4"	4"	32.04"	0"
Invert 3	892.43'	270°	23"	4" WEEP HOLE	4"	Hole 4	4"	4"	32.04"	0"
Invert 4										
Invert 5										
Invert 6										
Invert 7										
Invert 8										

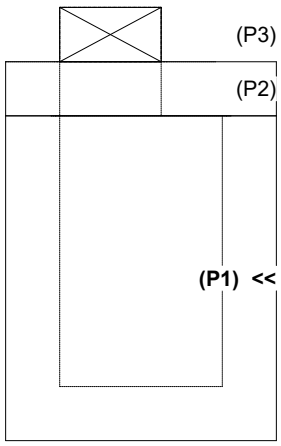

RIGHT-SIDE UP VIEW (int. dimensions)

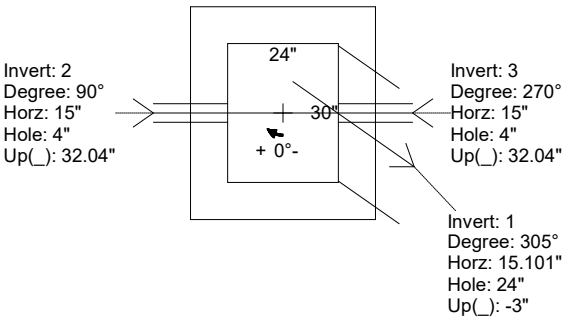

UPSIDE-DOWN VIEW (int. dimenions)

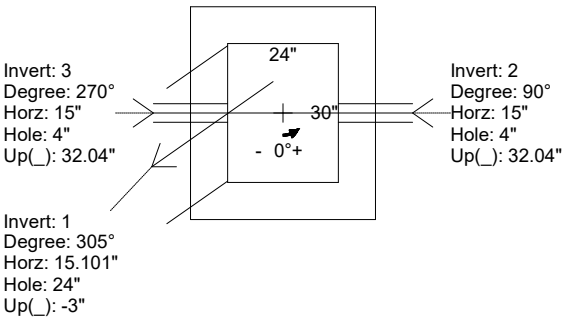

INSIDE WALL DIMENSIONS

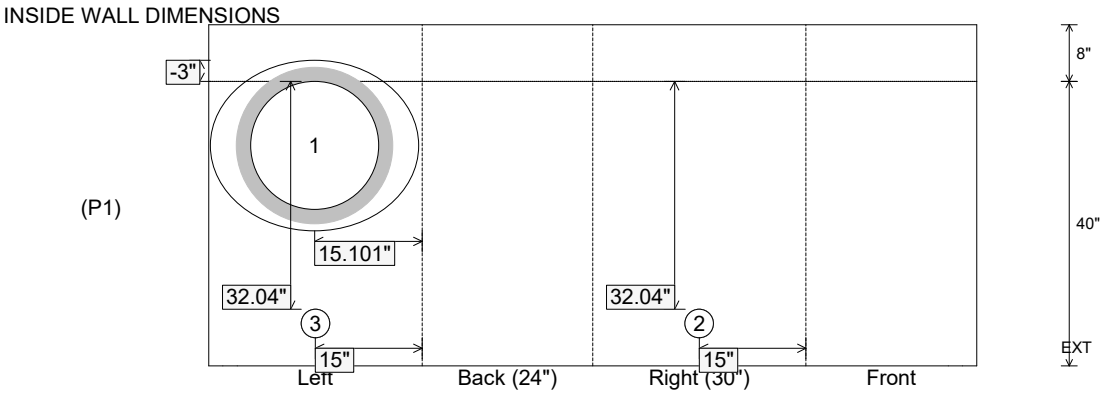

Coating (Int): Coating (Ext):	Seam Up: Flat Seam Dn: n/a	Wall Thickness: 8" Floor Height: 8"	Height (Int): 40" Height (Ext): 48"	Weight (Net): 4607 lb Volume (Net): 1.18cu.yd

GENERAL NOTES:

1. MANUFACTURED TO ASTM C-913 (LATEST REVISION).
2. CONCRETE: 5,000 PSI AT 28 DAYS.
3. REINFORCING: #5 @ 12" C/C E.W. 2" COVER MIN.
4. WEIGHT: 338 LBS. EACH
5. CONTRACTOR TO SECURE FES TOE TO THE FES.

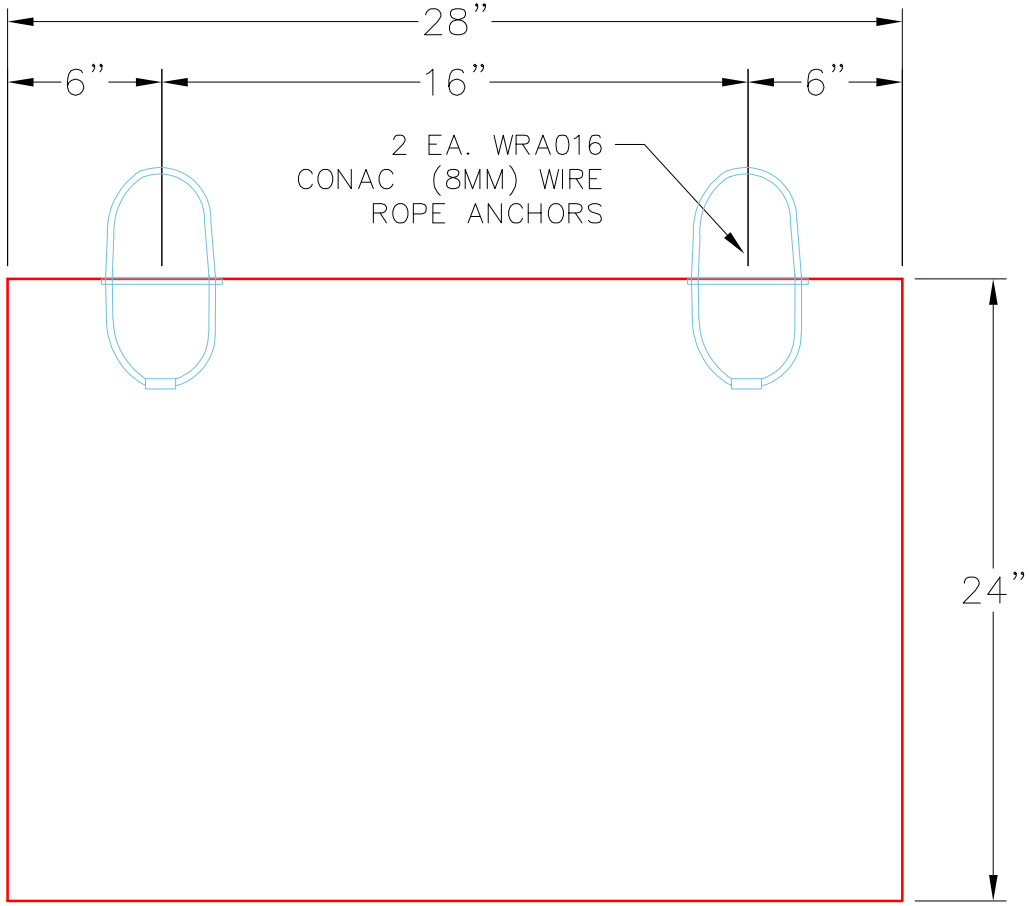

FRONT VIEW

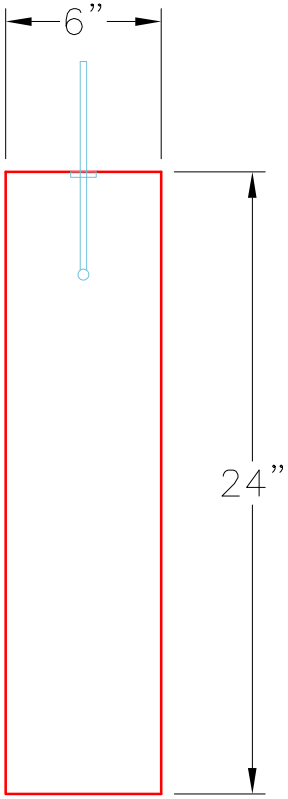

SIDE VIEW

PRODUCTION WORK ORDER	PRODUCT I.D.: FES12B-TB	DESCRIPTION: TOE FOR 12" FES	
QUALITY CONTROL CHECKLIST	PRODUCT VIEW: RIGHT SIDE UP	CUSTOMER: RUSSELL'S EXCAVATING	
☐ ALL DIMENSIONS CORRECT.	PLANT: BEAVER DAM, KY.	PROJECT: PROJECT COLT	
☐ LIFTERS INSTALLED.	WEIGHT: 338 LBS.	STRUCTURE: 206-27 FES TOE	
☐ OPENING CENTERED.	TOP SECTION JOINT: N/A	ORDER NO: 26-1227	
☐ REINFORCING CORRECT.	BASE SECTION JOINT: N/A	PC: A. CHAMBERS	DRAWING: J. COPPAGE
☐ SURFACE QUALITY ACCEPTABLE.	QC CHECK INITIALS:	DATE: 6/26/26	SCALE: NTS / PG. 1 of 1
☐ EDGES CHAMFERED.			
☐ ALL PATCHWORK ACCEPTABLE.			

THIS DRAWING IS THE PROPERTY OF INFRASTRUCTURE PRECAST, INC. ANY USE OR DUPLICATION OF THIS DRAWING WITHOUT PRIOR AUTHORIZATION IS STRICTLY PROHIBITED.

Job Name: 26-1000P2 Clark Distributing New HQ - Site Structures
Job Location: Bowling Green, KY
Contractor: Scotty's Contracting & Stone, LLC

Structure ID: HDW 6

P1 HWPC48F

48" - PIPE CULVERT HEADWALL w/Flat Bottom F/F

Plant: Beaver Dam
8/11/2026 3:45:05 PM

Tech: S. Fellettter
PC: M. Sullivan

DIMENSIONS									
PIPE ø	A	B	C	D	E	F	G	H	WEIGHT
30"	6'-4"	6'-4"	4'-0"	1'-4"	5'-0"	3'-6"	11'-8"	5'-4"	8,820 lbs.
36"	6'-4"	6'-4"	4'-0"	1'-4"	5'-0"	4'-0"	11'-8"	5'-4"	8,820 lbs.
42"	6'-4"	6'-7"	5'-5"	2'-4"	6'-2"	4'-6"	11'-8"	6'-10"	13,230 lbs.
48"	6'-4"	6'-7"	5'-5"	2'-4"	6'-2"	5'-2"	11'-8"	6'-10"	13,230 lbs.
54"	7'-4"	7'-8"	6'-6"	2'-4"	7'-4"	5'-8"	13'-8"	6'-0"	18,422 lbs.
60"	7'-4"	7'-8"	6'-6"	2'-4"	7'-4"	6'-4"	13'-8"	6'-0"	18,422 lbs.

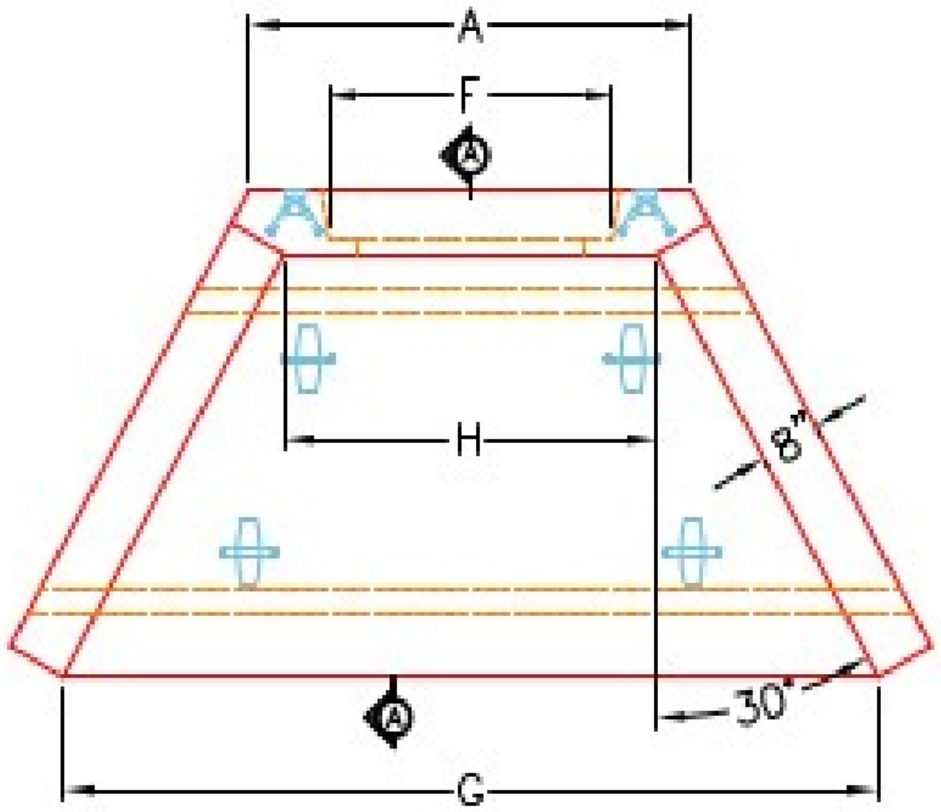

PLAN VIEW

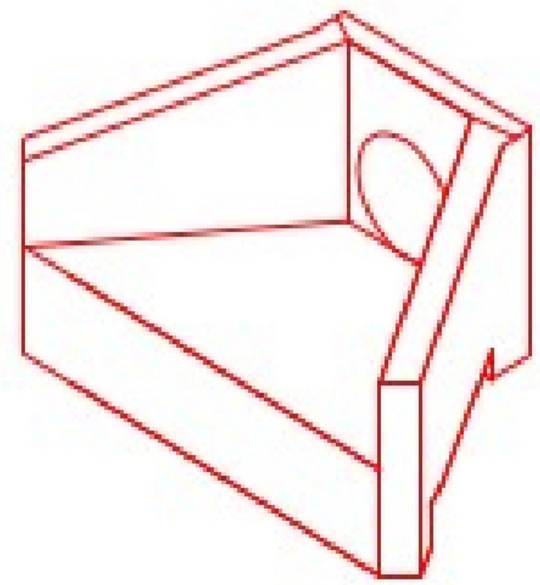

ISOMETRIC VIEW

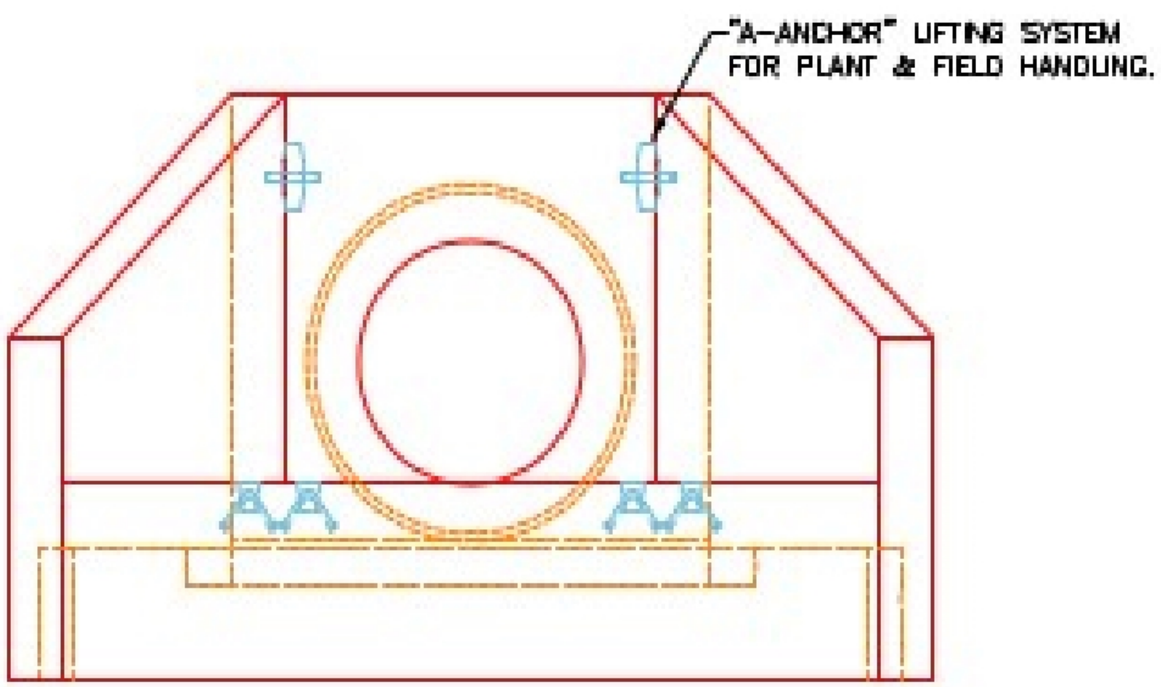

FRONT ELEVATION

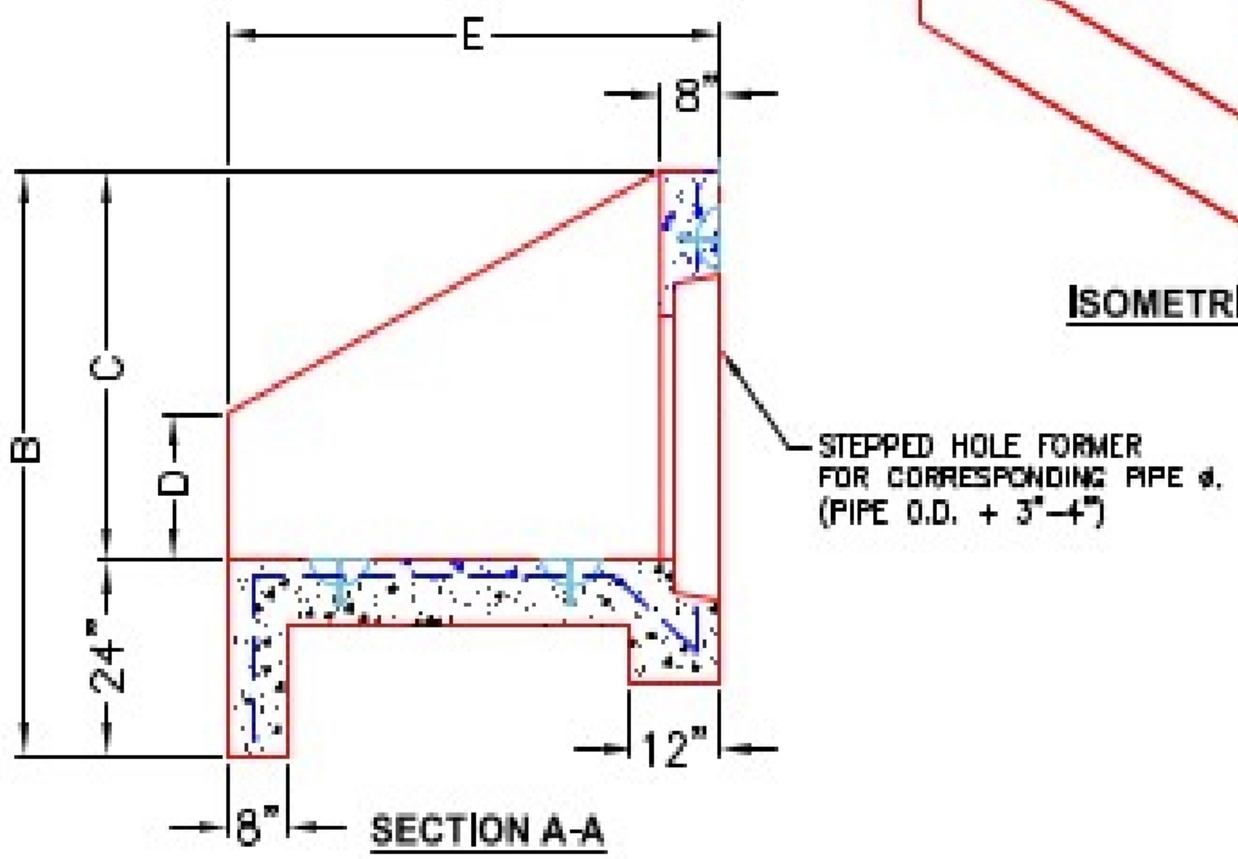

SECTION A-A

~NOTES:

1. CONCRETE: KYTC APPROVED.
2. REINFORCING: #5 BAR @ 12" C/C E.W.-GRADE 60, (WITH 2" CONCRETE COVER MINIMUM)
3. REINFORCING BARS TO BE TACK WELDED OR TIED.
4. PIPE AND LIFTING ANCHOR POCKETS TO BE GROUTED WITH KYTC APPROVED NON-SHRINK GROUT.
5. DRAWING TO BE USED IN CONJUNCTION WITH KYTC STD. DRAWING RDH-110-02, RDH-210-03 AND THE STANDARD SPECIFICATIONS FOR ROAD AND BRIDGE CONSTRUCTION.
6. 3/4" CHAMFER ON ALL EXPOSED EDGES.
7. PREFORMED STEPPED HOLE SIZED AS PER O.D. OF PIPE + 3"-4".

APPROVED FOR DESIGN ONLY

BY: APPROVED AS PER SPECIFICATION 105.02 KYTC DIV. OF CONSTRUCTION

DATE: 1/20/2021 9:50 am

NSTRUCTION

INFRASTRUCTURE PRECAST, INC.
401 WEST 7TH ST., BEAVER DAM, KY. 42320
PHONE: (270) 309-2200, FAX: (270) 309-9404

KYTC 30"-60" PIPE CULVERT HEADWALL

DRAWING NO.: KYTC PC-HW	DATE: 12-14-20
REVIEWED BY: J.H. ROSS, PE	DRAWN BY: H. RICHARDS
WEB: WWW.ICASTINC.COM	SCALE: NTS

THIS DRAWING IS THE PROPERTY OF INFRASTRUCTURE PRECAST, INC. ANY USE OR DUPLICATION OF THIS DRAWING WITHOUT PRIOR AUTHORIZATION IS STRICTLY PROHIBITED.

Job Name: 25-1684P14 KYTC Jefferson Co. Call 200 (251007) Job Location: I-264 Louisville, Ky. Contractor: Cleary Construction, Inc.	Plant: Beaver Dam, KY 8/4/2026 11:28:38 AM	Tech: J. Coppage PC: T. Ryan	

Structure ID: 18+72 CBBI-MOD B1

P2 CMBBIT9-B1RH — CB MED BAR BOX INLET 9B1 RH

P3) 24" x 120" - CASTING (cast in) - 3"	0 lb
P2) 24" x 120" - CB MED BAR BOX INLET 9B1 RH - 17"	4000 lb
P1) 24" x 36" - BOX BASE 8inW, 8inF, Variable Ht - 38"	4763 lb
1) 24" x 36" - Conseal CS-102 1.00"	0 lb
2) Hole - 22	0 lb
Structure Total:	8763 lb

Structure Notes: .
- -KYTC STATE PROJECT 251007
- -REINFORCING: #5 BAR @ 12" C/C E.W. (TYP.)
- -CASTING FRAMES & GRATES BY OTHERS.
- -CS-102 BUTYL REQUIRED (SUPPLIED BY ICAST).
- -KYTC CERTIFICATIONS REQUIRED.

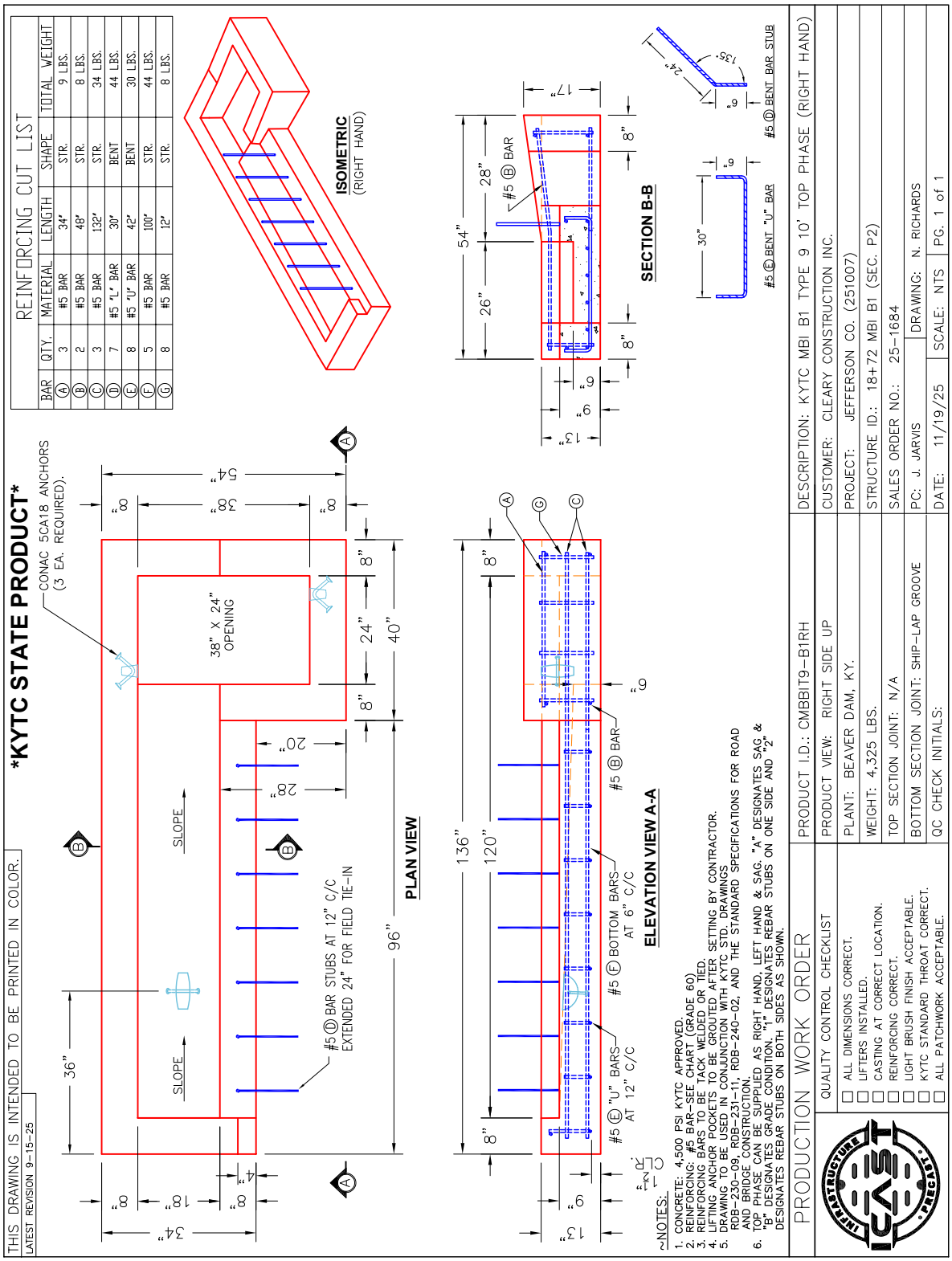

Coating (Int): Coating (Ext):	Seam Up: Flat Seam Dn: Flat	Wall Thickness: 8"	Height (Ext): 17"	Weight (Net): 4000 lb Volume (Net): 0cu.yd

26-3200 906957 Austin Tri-Hawk Auto

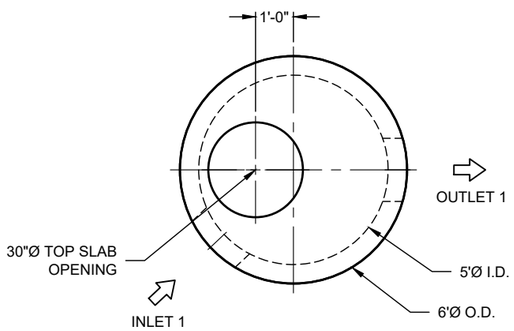

PLAN VIEW
INTERNALS NOT SHOWN

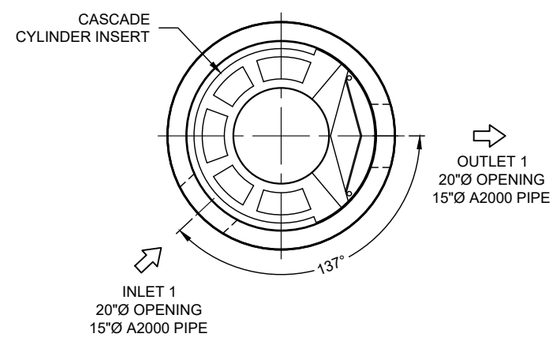

PLAN VIEW FOR PIPE ORIENTATION
TOP SLAB NOT SHOWN

10-CS-5
ICAST to fully pre-assemble internal materials prior to shipment

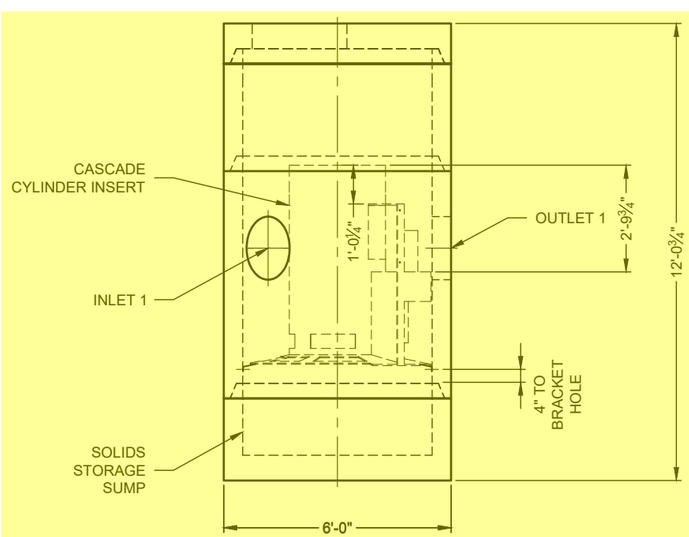

ELEVATION VIEW

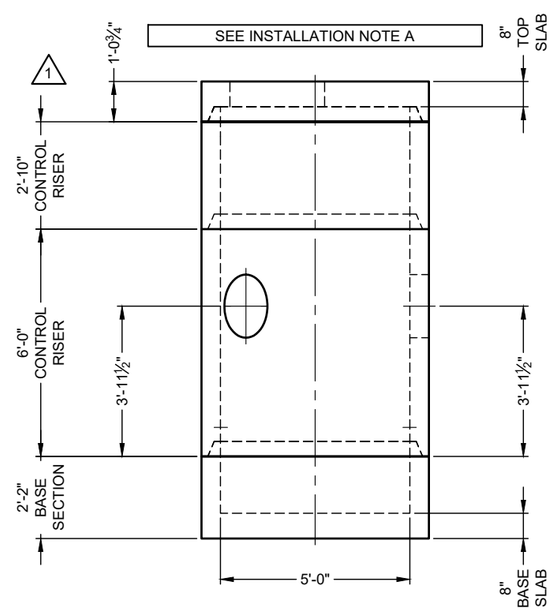

PRECAST COMPONENTS
INTERNALS NOT SHOWN

ICAST
5888 / 757440
LAYOUT 1A
9.37TS

CONTECH
FABRICATION
DRAWING

MATERIAL LIST

COUNT	DESCRIPTION	PART NUMBER	PROVIDED BY	INSTALLED BY
1	CS-5 CYLINDER INSERT, STD.	325-003950	CONTECH	PRECASTER
4	CS-5 ALUMINUM INSTALLATION BRACKETS	325-003956	CONTECH	PRECASTER
1	CS-5 HARDWARE KIT	325-003955	CONTECH	PRECASTER
1	SEALANT FOR JOINTS		PRECASTER	CONTRACTOR
1	30"Ø X 4" FRAME AND COVER, EJ #41600483, OR EQUIV.	325-000332	CONTECH	CONTRACTOR

GENERAL NOTES
1. DESIGN LOADING - AASHTO HS-20
2. ALL PRECAST CONCRETE MANUFACTURED PARTS SHALL CONFORM TO ASTM C-478, WITH MINIMUM CONCRETE STRENGTH OF 4000 PSI AT 28 DAYS
3. JOINT SEALANT SHALL CONFORM TO ASTM C-990 OR ASTM C-443
4. GROUND WATER ELEVATION ASSUMED AT OUTLET INVERT
5. MANUFACTURING TOLERANCE = +/- 1/2-INCH
6. SOME HIDDEN LINES MAY BE OMITTED FOR CLARITY

INSTALLATION NOTES
A. PRECASTER TO SHIP ACCESS CASTINGS WITH STRUCTURE
B. REFER TO CONTECH ASSEMBLY INSTRUCTIONS FOR ADDITIONAL INFORMATION.
C. PRECASTER TO INSTALL INTERNAL COMPONENTS PRIOR TO SHIPPING UNLESS INSTRUCTED OTHERWISE BY CONTECH
D. PIPE OPENINGS SHALL BE STENCILED "INLET" OR "OUTLET" AS APPROPRIATE
E. APPLYING ALIGNMENT MARKS ON ALL PIECES OF MULTIPLE PIECE ASSEMBLIES IS ENCOURAGED
F. IF STRUCTURE IS DELIVERED IN MULTIPLE SECTIONS, EACH PIECE SHALL BE LABELED WITH THE CONTECH PROJECT NUMBER, SEQUENCE NUMBER AND SITE DESIGNATION

SITE INFORMATION
RIM ELEV. = 560.1+/-
TOP OF STRUCTURE = 559.23
INLET PIPE 1 INVERT ELEV. = 552.67
INLET PIPE 1 DIAMETER AND MATERIAL = 15"Ø A2000
OUTLET PIPE INVERT ELEV. = 552.67
OUTLET PIPE DIAMETER AND MATERIAL = 15"Ø A2000
OUTSIDE BOTTOM OF STRUCTURE ELEV. = 547.16

STRUCTURE WEIGHT
APPROXIMATE HEAVIEST PICK = 8500 LBS.
STRUCTURE IS DELIVERED IN 4 PIECES

TOP SLAB = 3000 LBS.
RISER 2 = 4000 LBS.
CONTROL RISER = 8500 LBS.
BASE SECTION = 5500 LBS.

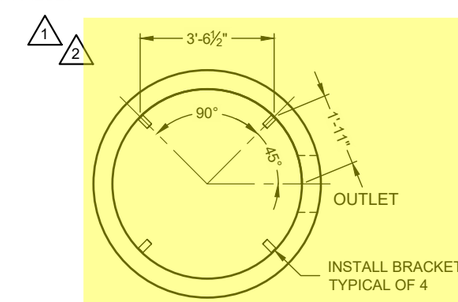

SUPPORT BRACKET LAYOUT PLAN VIEW

The design and information shown on this drawing is provided as a service to the owner, engineer and/or contractor by CONTECH Construction Products Inc. or one of its affiliated companies ("CONTECH"). Neither this drawing nor any part thereof may be used, reproduced or modified in any manner without the prior written consent of CONTECH. Failure to comply is done at the user's own risk and CONTECH expressly disclaims any liability or responsibility for such use.

If discrepancies between the supplied information upon which the drawing is based and actual field conditions are encountered as site work progresses, these discrepancies must be reported to CONTECH immediately for re-evaluation of the design. CONTECH accepts no liability for designs based on missing, incomplete or inaccurate information supplied by others.

MARK	DATE	REVISION DESCRIPTION	BY
2	8/4/2026	RISER 2 WEIGHT	MDB
1	7/29/2026	PIECE COUNT, HPW, DIM	MDB

CS-5 - 906957-10
AUSTIN TRI-HAWK AUTOMOTIVE
AUSTIN, IN
SITE DESIGNATION: #301.1

CONTECH® ENGINEERED SOLUTIONS LLC
A QUIKRETE® COMPANY
9100 Centre Pointe Dr., Suite 400, West Chester, OH 45069
800-338-1122 513-645-7000 513-645-7993 FAX
CASCADE separator®
FOR PATENT INFORMATION, GO TO www.ContechES.com/IP

DATE: 6/17/2026	
DESIGNED: MDB	DRAWN: MDB
CHECKED: LJK	APPROVED: MDB
PROJECT No.: 906957	SEQUENCE No.: 10
SHEET: 1 OF 1	

C:\USERS\MICHAEL.BEAVER\ONEDRIVE - THE QUIKRETE COMPANIES\DYNAMICS365 - CONTECH - PROJECTS\906957\PRODUCTS\10-CASCADE 51\DRAWINGS\906957-10-CS-5-CONFAB.DWG 8/4/2026 10:34 AM

26-3200 906957 Austin Tri-Hawk Auto

1810B4 V1600-4 Assembly

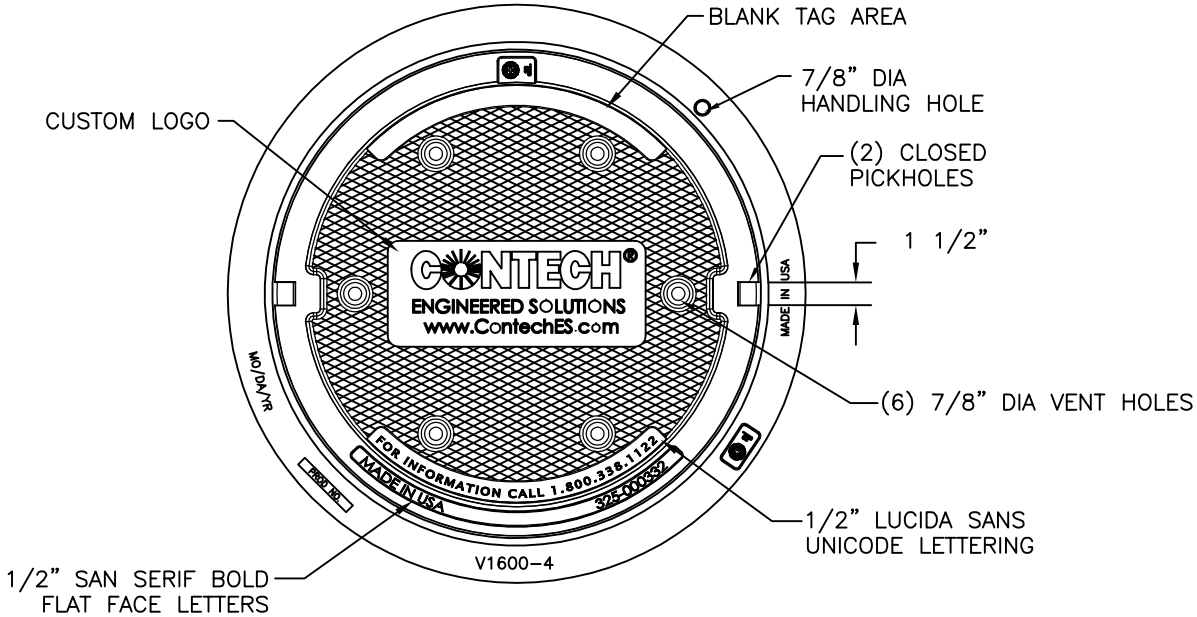

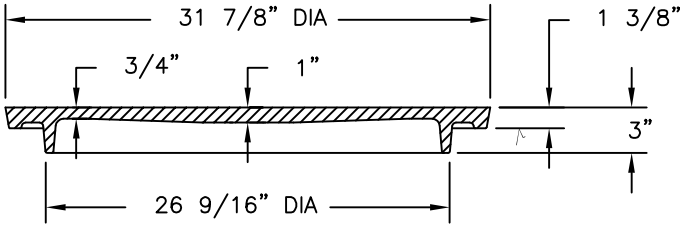

COVER SECTION

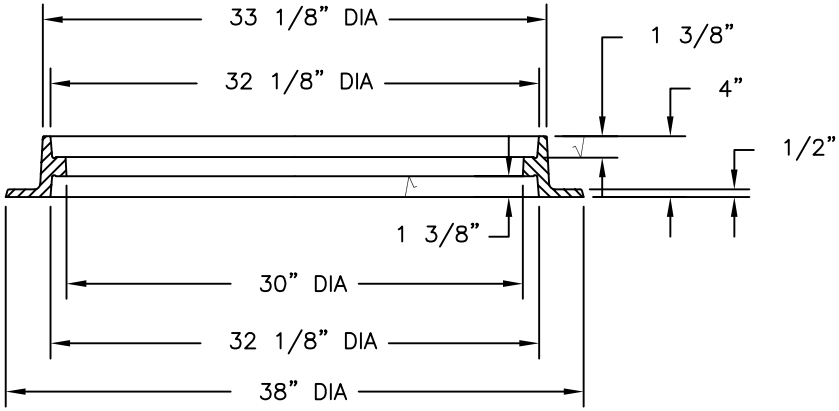

FRAME SECTION

Product Number

41600483

Design Features

-Materials
Cover
Gray Iron (CL35B)
Frame
Gray Iron (CL35B)

-Design Load
Heavy Duty
-Open Area
n/a
-Coating
Undipped
-√ Designates Machined Surface

Certification

-
- ASTM A48
-
-Country of Origin: USA

Major Components

00180783
41600410

Drawing Revision

05/09/2007 Designer: SMH
6/26/2017 Revised By: DAE

Disclaimer

Weights (lbs./kg) dimensions (inches/mm) and drawings provided for your guidance. We reserve the right to modify specifications without prior notice.

CONFIDENTIAL: This drawing is the property of EJ GROUP, Inc., and embodies confidential information, registered marks, patents, trade secret information, and/or know how that is the property of EJ GROUP, Inc. Copyright © 2012 EJ GROUP, Inc. All rights reserved.

Contact

800 626 4653
ejco.com

26-3200 906957 Austin Tri-Hawk Auto

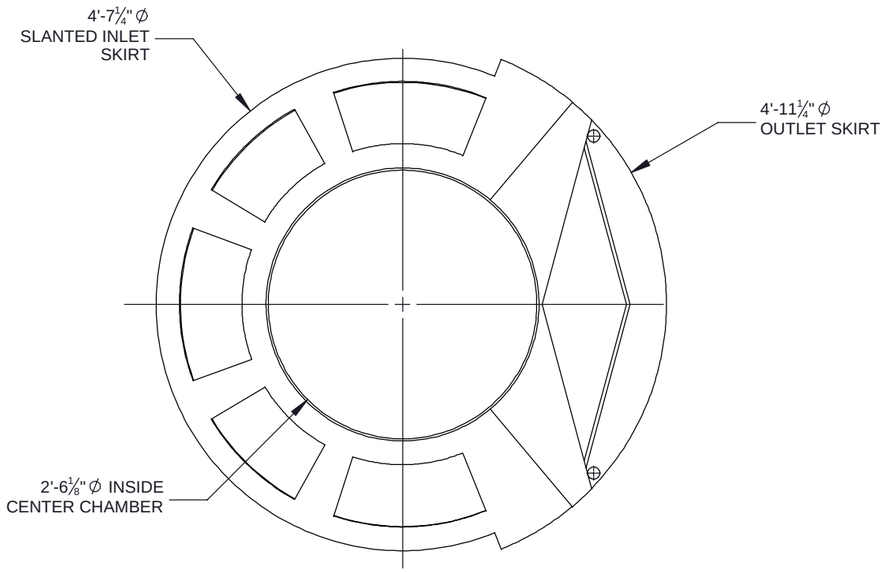

PLAN VIEW

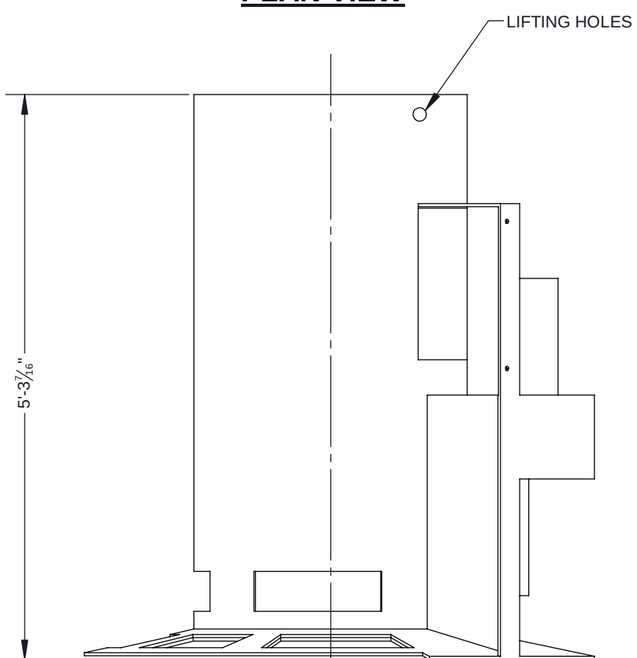

ELEVATION VIEW

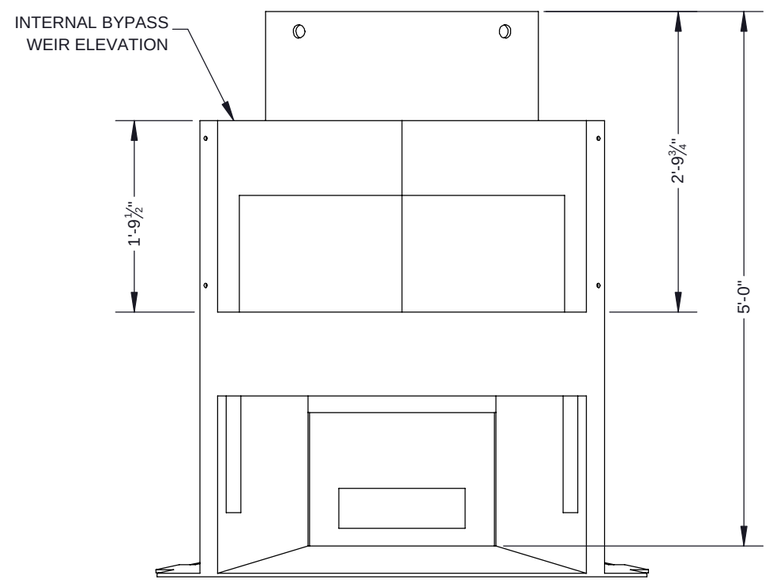

ELEVATION VIEW: OUTLET SIDE

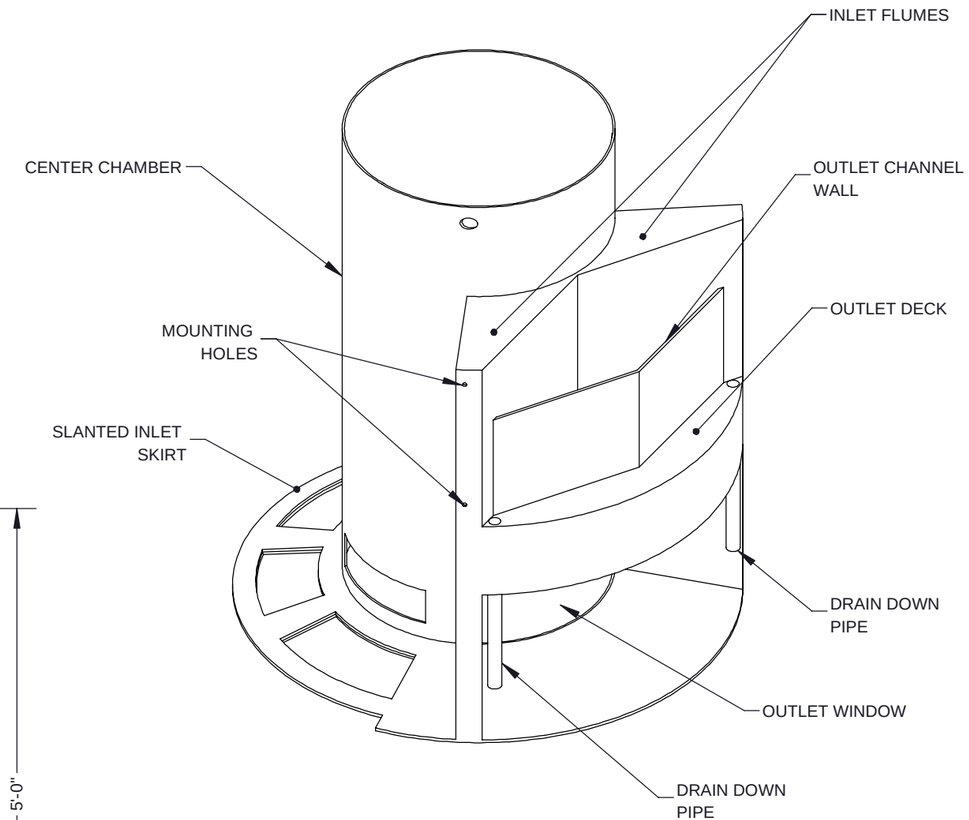

ISOMETRIC VIEW

NOTES:
1. SEE CASCADE SEPARATOR INSTALLATION GUIDE FOR ADDITIONAL INFORMATION

The design and information shown on this drawing is provided as a service to the project owner, engineer and contractor by Contech Engineered Solutions LLC, or one of its affiliated companies ("Contech"). Neither this drawing, nor any part thereof, may be used, reproduced or modified in any manner without the prior written consent of Contech. Failure to comply is done at the user's own risk and Contech expressly disclaims any liability or responsibility for such use.

If discrepancies between the supplied information upon which the drawing is based and actual field conditions are encountered as site work progresses, these discrepancies must be reported to Contech immediately for re-evaluation of the design. Contech accepts no liability for designs based on missing, incomplete or inaccurate information supplied by others.

CASCADE separator™

CONTECH® ENGINEERED SOLUTIONS LLC
www.ContechES.com
9025 Centre Pointe Dr., Suite 400, West Chester, OH 45069
800-338-1122 513-645-7000 513-645-7993 FAX

REFERENCE DETAIL
INTERNALS CS-5
CASCADE SEPARATOR

THIRD ANGLE PROJECTION

UNLESS OTHERWISE SPECIFIED
DIMENSIONS ARE IN INCHES

TOLERANCES:
FRACTIONAL ± 1/16
ANGLES ± 1 DEGREE
TWO PLACE DECIMAL ± 0.06
THREE PLACE DECIMAL ± 0.030

PART NUMBER: 325-003950		
APPROVED BY: M. BROOKS	DRAWN BY: J. BELL	
APPROVED BY DATE: 2021.10.21	DRAWN BY DATE: 2021.09.15	REV: D
SCALE: N/A	SHEET 1 OF 1	

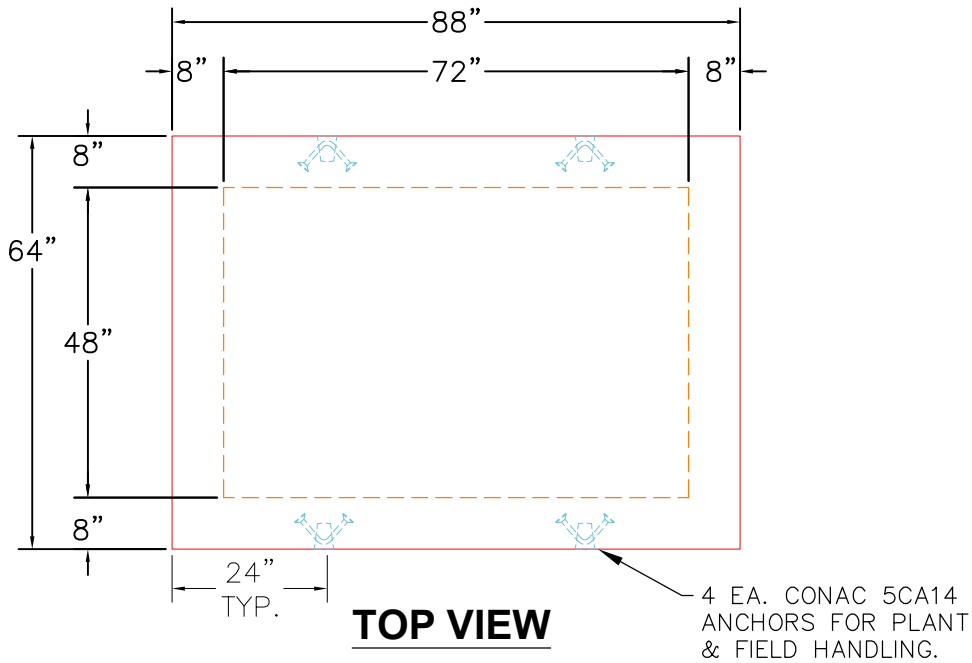

TOP VIEW

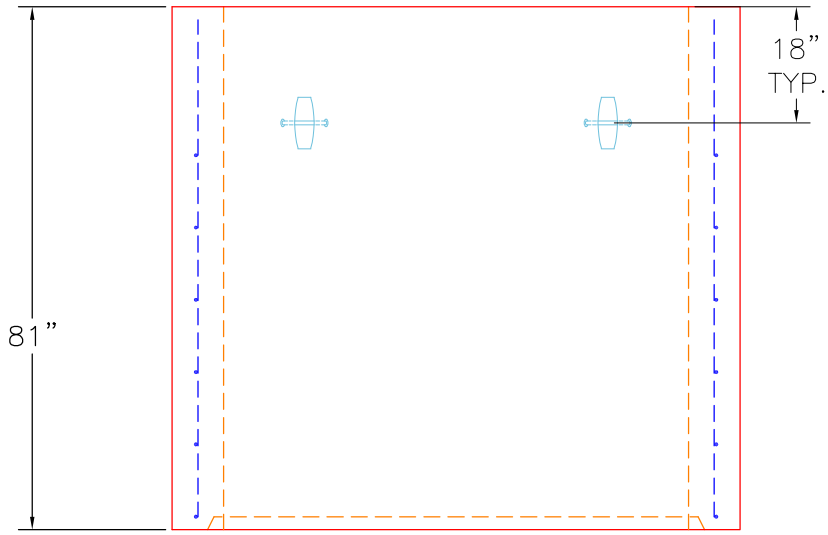

SIDE VIEW

GENERAL NOTES:

1. MANUFACTURED TO ASTM C–913 (LATEST REVISION).
2. CONCRETE: 5,000 PSI AT 28 DAYS.
3. REINFORCING: PER ASTM A615. (GRADE 60).
   – BASE #5 BAR @ 6” C.C.E.W.
5. WEIGHT: 14,790 LBS
6. LIFTING ANCHORS TO BE ON THE OUTSIDE OF THE STRUCTURE
7. CS–102 JOINT SEALANT.

PRODUCTION WORK ORDER		PRODUCT I.D.: BX4872–08RSVF	DESCRIPTION: 48” X 72” X 81” TALL RISER	
	QUALITY CONTROL CHECKLIST	PRODUCT VIEW: RIGHT SIDE UP	CUSTOMER: CONVERGENT WATER TECHNOLOGIES	
	☐ ALL DIMENSIONS CORRECT.	PLANT: BEAVER DAM, KY.	PROJECT: PALM ST. SMART POND	
	☐ LIFTERS INSTALLED.	WEIGHT: 14,790 LBS.	STRUCTURE: QL1	
	☐ HOLE LOCATION(S) CORRECT.	TOP SECTION JOINT: FLAT	ORDER NO: 26–1706	
	☐ REINFORCING CORRECT.	BASE SECTION JOINT: GROOVE	PC: C. GOFF	DRAWING: S. FELLETTER
	☐ SURFACE QUALITY ACCEPTABLE.	QC CHECK INITIALS:	DATE: 08/05/26	SCALE: NTS / PG. 1 of 1
	☐ EDGES CHAMFERED.			
	☐ ALL PATCHWORK ACCEPTABLE.			

THIS DRAWING IS THE PROPERTY OF INFRASTRUCTURE PRECAST, INC. ANY USE OR DUPLICATION OF THIS DRAWING WITHOUT PRIOR AUTHORIZATION IS STRICTLY PROHIBITED.

Job Name: 26-1735 - City Of Clarksville Vaults Job Location: Clarksville, TN Contractor: Clarksville Gas and Water	Plant: 100 8/11/2026 6:30:52 PM	Tech: Jared - F PC: A. Chambers	

Structure ID: QL3

P2 BX048096-08W-RSVF **BOX RISER 8inW, Variable Ht F/F**

P4) 36" x 72" - HATCH (CAST FLUSH) - 3.5"	100 lb
P3) 48" x 96" - CB FLAT TOP 8"W w/36"x72" HATCH F/F - 8"	3072 lb
P2) 48" x 96" - BOX RISER 8inW, Variable Ht F/F - 64"	13058 lb
P1) 48" x 96" - P.I.P. BY OTHERS - BTM SLAB F/n - 0"	0 lb
1) JOINT WRAP - 0.065"x6"x50' CONSEAL CS212	0 lb
1) JOINT WRAP PRIMER - CONSEAL CS-75 (1 gal.)	0 lb
2) 48" x 96" - Conseal CS-102 1.00" (Double)	0 lb
1) 36" x 72" - Conseal CS-102 1.00" (Double)	0 lb
2) DOGHOUSE - 16"x36"	0 lb
Structure Total:	16230 lb

Structure Notes: .
1. PER ASTM C913 SPECIFICATIONS.
2. CONCRETE = 4,000 PSI AT 28 DAYS.
3. HATCH SUPPLIED BY OTHERS (HALLIDAY H1R 36"x72").
.
REINFORCING PER ASTM A615 (GRADE 60).
- TOP SLAB(As.12) #5 BARS AT 6" C.C.E.W.
- WALLS(As.12) #5 BARS AT 8" C.C.E.W.

Rim: 6' Rim to Invert: 6' Slack: 0" Sump: 0" Step Position:

Position	Elev	Angle	Ext. (cw)	Pipe	Pipe OD	Connector	Hole	Horz Size	Up (_)	Offset
Invert 1	0'	0°	32"	0" No Hole	0.01"	DOGHOUSE 16"x36"	16" x 36"	16"	0"	0"
Invert 2	0'	180°	32"	0" No Hole	0.01"	DOGHOUSE 16"x36"	16" x 36"	16"	0"	0"
Invert 3										
Invert 4										
Invert 5										
Invert 6										
Invert 7										
Invert 8										

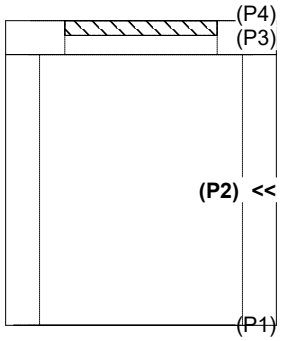

RIGHT-SIDE UP VIEW (int. dimensions)

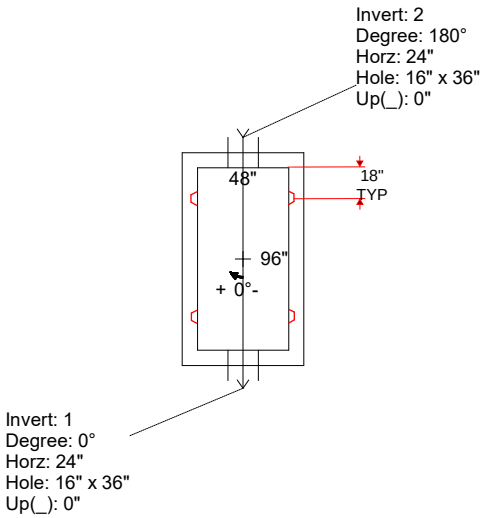

INSIDE WALL DIMENSIONS

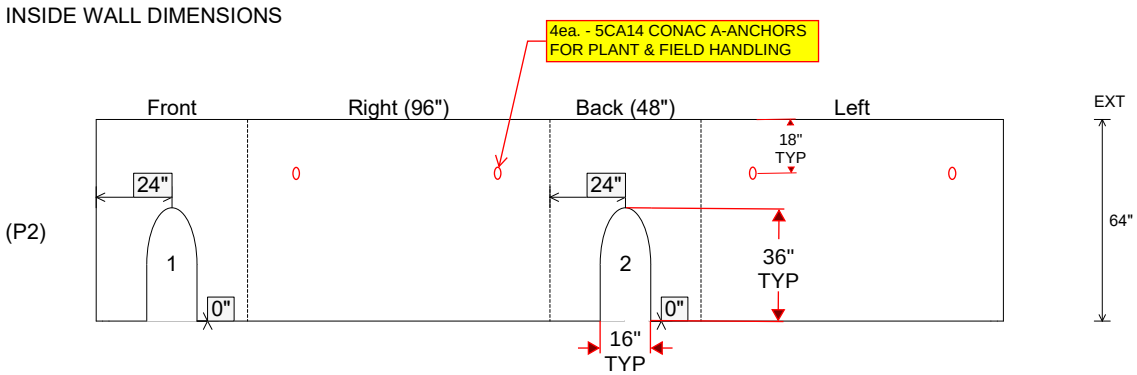

Coating (Int): Coating (Ext):	Seam Up: Flat Seam Dn: Flat	Wall Thickness: 8" Floor Height: 0"	Height (Int): 64" Height (Ext): 64"	Weight (Net): 13058 lb Volume (Net): 3.34cu.yd

Job Name: 26-1735 - City Of Clarksville Vaults Job Location: Clarksville, TN Contractor: Clarksville Gas and Water	Plant: 100 8/11/2026 6:30:51 PM	Tech: Jared - F PC: A. Chambers	

Structure ID: QL2

P2 BX120120-08W-RSVF BOX RISER 8inW, Variable Ht F/G

P4) 42" x 72" - HATCH (CAST FLUSH) - 3.5"	100 lb
P3) 120" x 120" - BX FLAT LID 8inW w/2x 42"x72" HATCHES F/F - 8"	8355 lb
P2) 120" x 120" - BOX RISER 8inW, Variable Ht F/G - 64"	21997 lb
P1) 120" x 120" - BOX BASE 8inW, 8inF, Variable Ht T/n - 24"	20665 lb
1) Conseal CS-102 1.00" (Double)	0 lb
2) JOINT WRAP - 0.065"x6"x50' CONSEAL CS212	0 lb
2) JOINT WRAP PRIMER - CONSEAL CS-75 (1 gal.)	0 lb
1) Hole - 0	0 lb
Structure Total:	51117 lb

Structure Notes: .
1. PER ASTM C913 SPECIFICATIONS.
2. CONCRETE = 4,000 PSI AT 28 DAYS.
3. HATCH SUPPLIED BY OTHERS (2ea. HALLIDAY H2R 72"x42").
.
REINFORCING PER ASTM A615 (GRADE 60).
- TOP SLAB(As.12)#5 BARS AT 6" C.C.E.W.
- WALLS(As.12) #5 BARS AT 8"C.C.E.W.
- FLOOR (As .12) #5 BARS AT 8" C.C.E.W.

Rim: 8' Rim to Invert: 8' Slack: 0" Sump: 0" Step Position:

Position	Elev	Angle	Ext. (cw)	Pipe	Pipe OD	Connector	Hole	Horz Size	Up (_)	Offset
Invert 1										
Invert 2										
Invert 3										
Invert 4										
Invert 5										
Invert 6										
Invert 7										
Invert 8										

RIGHT-SIDE UP VIEW (int. dimensions)

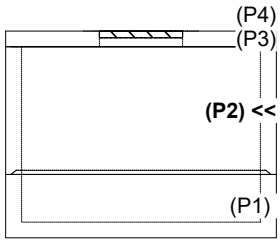

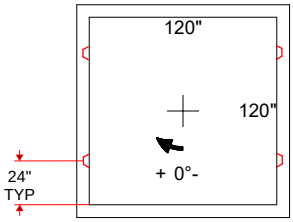

INSIDE WALL DIMENSIONS

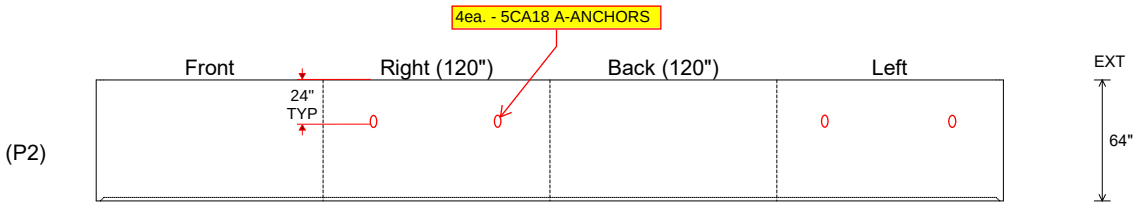

Coating (Int): Coating (Ext):	Seam Up: Flat Seam Dn: Groove	Wall Thickness: 8" Floor Height: 0"	Height (Int): 64" Height (Ext): 64"	Weight (Net): 21997 lb Volume (Net): 5.62cu.yd

Job Name: 25-1684P14 KYTC Jefferson Co. Call 200 (251007) Job Location: I-264 Louisville, Ky. Contractor: Cleary Construction, Inc.	Plant: Beaver Dam, KY 8/4/2026 11:28:57 AM	Tech: J. Coppage PC: T. Ryan	

Structure ID: 15+86 MOD MH TYPE C

P2 BX084132-10TS48 CB FT REDUCER 48" HOLE

P5) 24" - CASTING HEIGHT - 4"	0 lb
P4) 24" - GRADE RING - 3"	202 lb
P3) 48" - ECC CONE w/ 24" HOLE - 42"	3200 lb
P2) 84" x 132" - CB FT REDUCER 48" HOLE - 10"	10901 lb
P1) 84" x 132" - BX BASE w/FLANGE 08W/12F/08EF - 84"	36186 lb
1) 48" - SGL 1"x14.5' Butyl	0 lb
1) Hole - 52	0 lb
2) Hole - 40	0 lb
1) SQ. Hole - 68"x68"	0 lb
4) Vert. Notch - 7"x9"x5"	0 lb
Structure Total:	50489 lb

Structure Notes: .
-KYTC STATE PROJECT 251007
-KYTC CERTIFICATIONS REQUIRED.
1. PER KYTC MANHOLE TYPE C / ASTM C913 SPEC'S.
2. CONCRETE = 4,000 PSI AT 28 DAYS.
3. NO INVERT CHANNEL
4. CASTING PROVIDED BY OTHERS.
5. REINFORCING PER ASTM A615 (GRADE 60).
- TRANS. SLAB #5's AT 6" C.C.E.W (DBL MAT).
- WALLS #5's AT 6" C.C.E.W.
- FLOOR #5's AT 12" C.C.E.W..
6. PRODUCTION TO PLACE 4X POCKETS FOR I-BEAMS (I-BEAM PROVIDED BY OTHERS)

KYTC STATE PROJECT

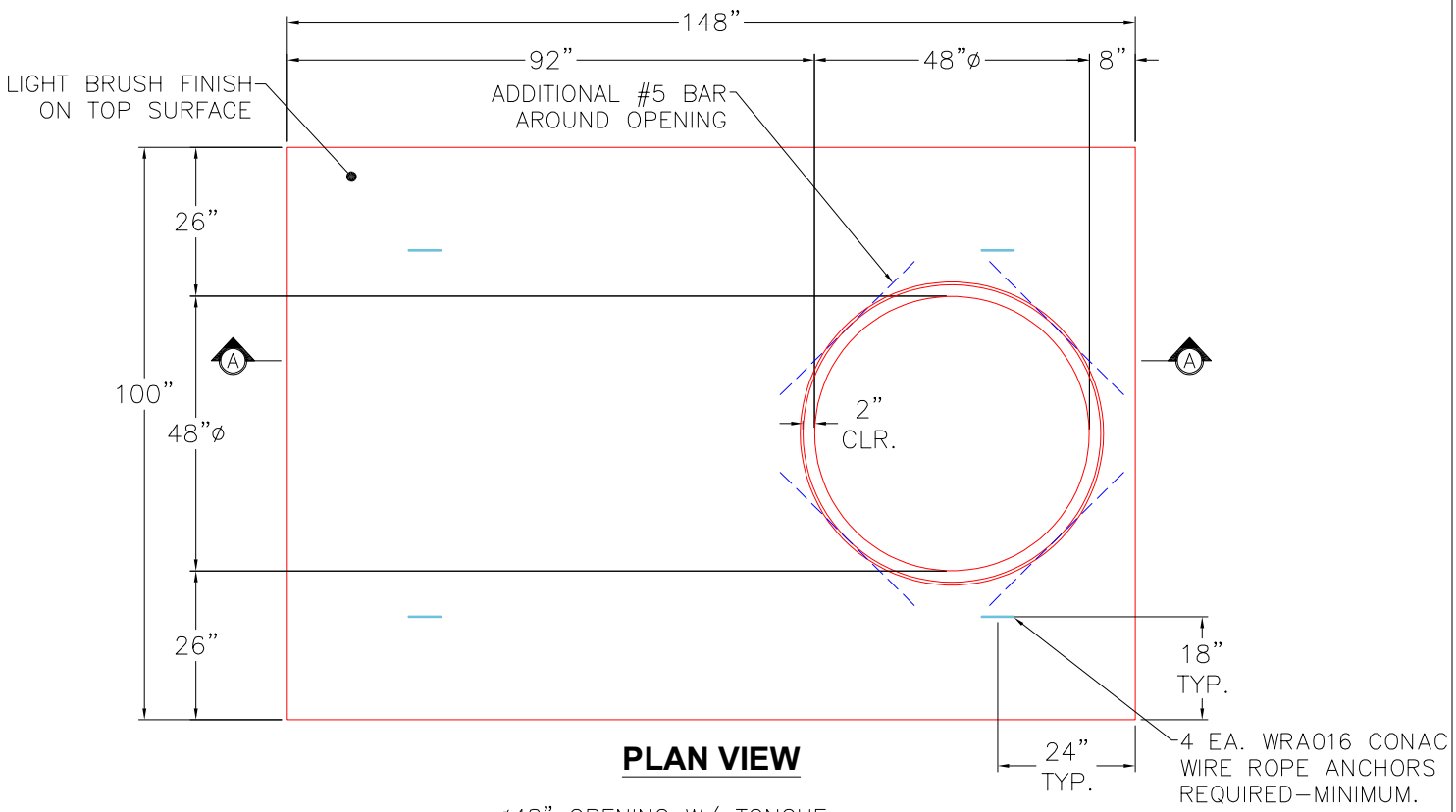

PLAN VIEW

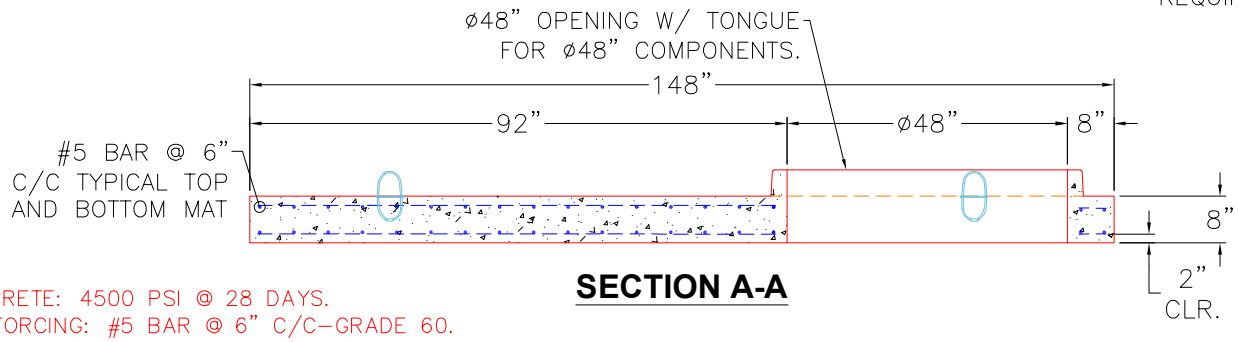

SECTION A-A

NOTES:

–CONCRETE: 4500 PSI @ 28 DAYS.
–REINFORCING: #5 BAR @ 6" C/C–GRADE 60. (TOP & BOTTOM LAYERS).
–KYTC CERTIFICATIONS REQUIRED.
–4 EA. CONAC WIRE LOOP LIFTERS REQUIRED.

Coating (Int): Coating (Ext):	Seam Up: Tongue Seam Dn: Flat	Wall Thickness: 8"	Height (Ext): 10"	Weight (Net): 10901 lb Volume (Net): 2.78cu.yd

Job Name: 25-1684P14 KYTC Jefferson Co. Call 200 (251007) Job Location: I-264 Louisville, Ky. Contractor: Cleary Construction, Inc.	Plant: Beaver Dam, KY 8/4/2026 11:28:52 AM	Tech: J. Coppage PC: T. Ryan	

Structure ID: 16+15 JB-B1 INLET 36

P2 BX060060-08LD08S BX FLAT LID 8inW SPEC. (KY JB-B1)

P3) CASTING (cast in) - 0	0 lb
P2) 60" x 60" - BX FLAT LID 8inW SPEC. (KY JB-B1) - 8"	3574 lb
P1) 60" x 60" - BOX BASE 8inW, 8inF - 66"	13077 lb
2) Hole - 52	0 lb

Structure Total:	16651 lb

Structure Notes: .
-KYTC STATE PROJECT 251007
-REINFORCING: #5 BAR @ 12" C/C E.W. (TYP.).
-CASTING BY OTHERS.
-CS-102 BUTYL REQUIRED (SUPPLIED BY ICAST).
-KYTC CERTIFICATIONS REQUIRED.

KYTC STATE PROJECT

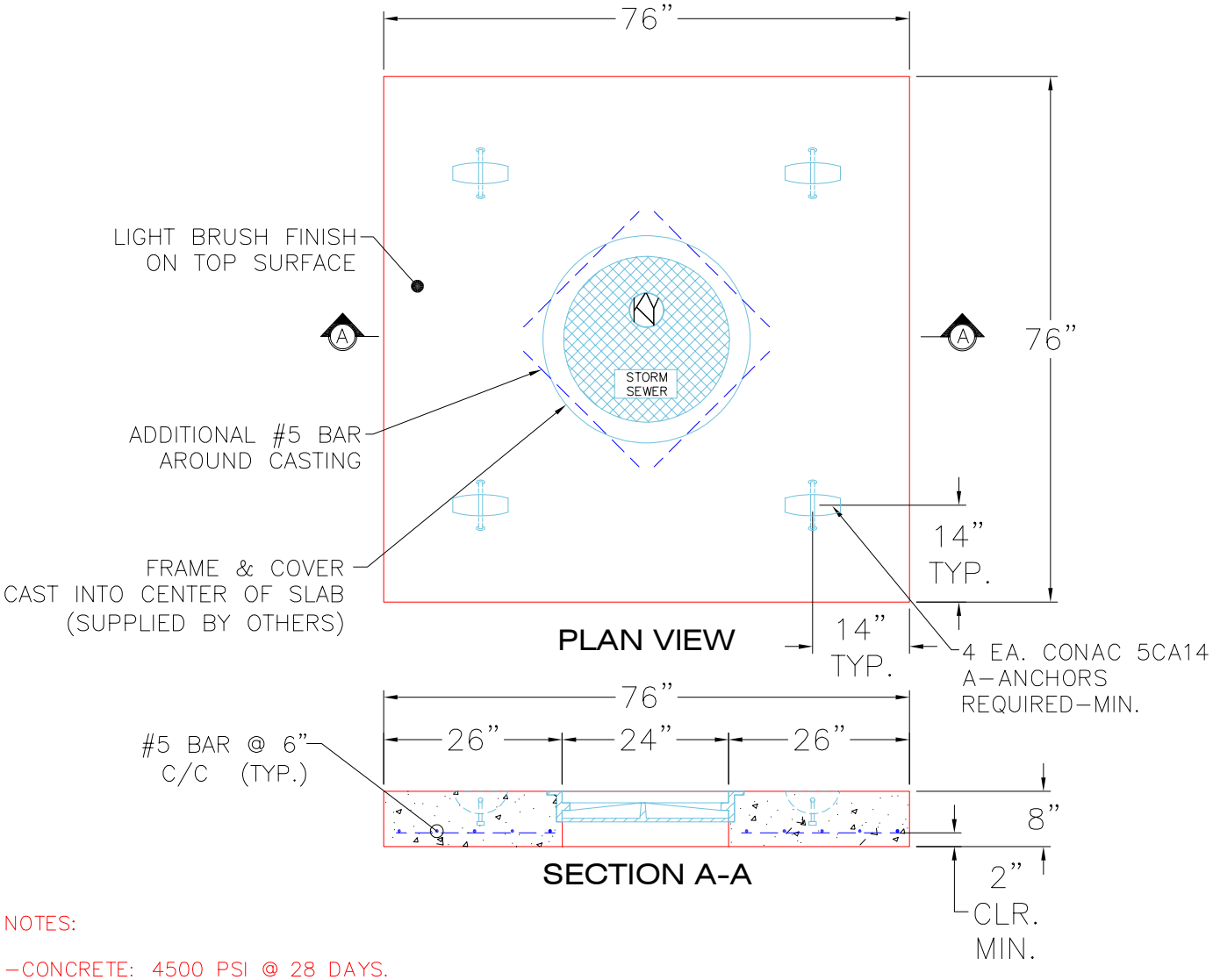

NOTES:

–CONCRETE: 4500 PSI @ 28 DAYS.
–MANUFACTURED TO KYTC & ASTM C–913 SPECIFICATIONS.
–REINFORCING: #4 BAR @ 6” C.C. E.W. –GRADE 60.
–KYTC STATE CERTIFICATIONS REQUIRED.
–4 EA. CONAC 5CA14 A–ANCHORS REQUIRED (MIN.)

Coating (Int): Coating (Ext):	Seam Up: Flat Seam Dn: Flat	Wall Thickness: 8"	Height (Ext): 8"	Weight (Net): 3574 lb Volume (Net): 0.91cu.yd

PRINT IN COLOR FOR ADDITIONAL CLARITY

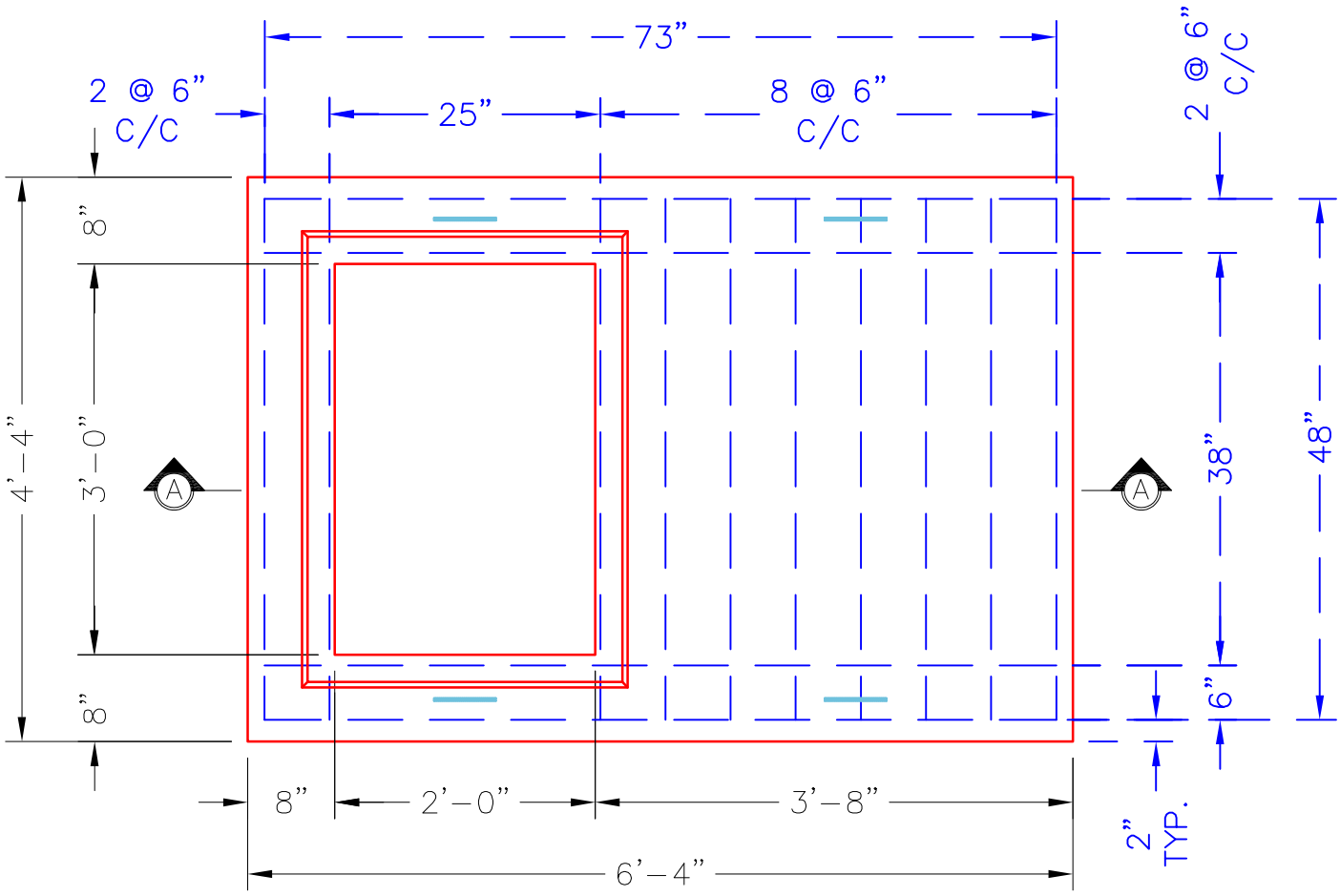

PLAN VIEW

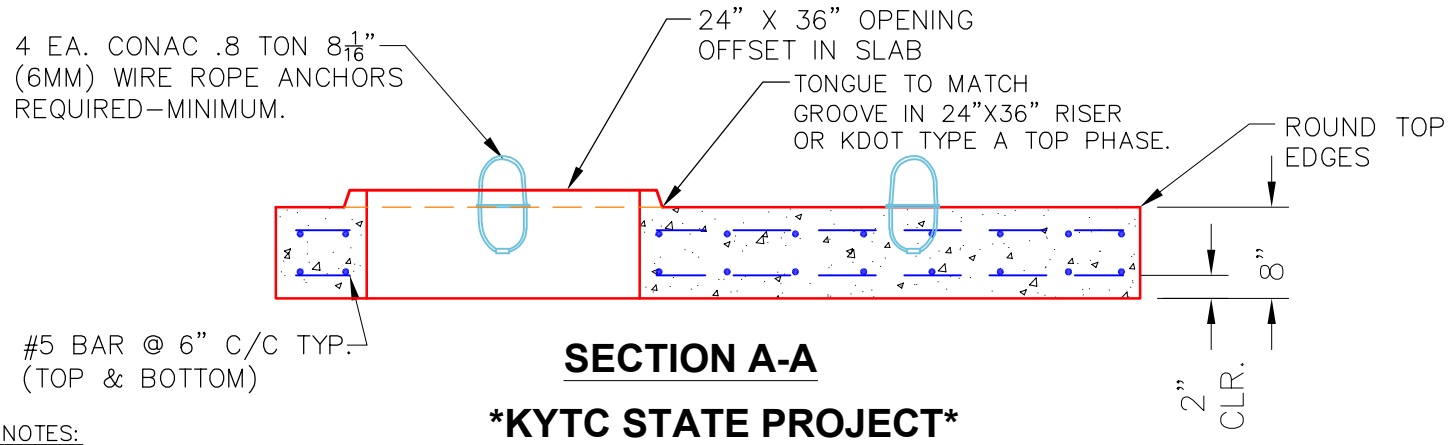

SECTION A-A

KYTC STATE PROJECT

NOTES:

- CONCRETE: 4500 PSI @ 28 DAYS.
- MANUFACTURED TO ASTM C-913 SPECIFICATIONS.
- REINFORCING: #5 BAR @ 6" C/C AS SHOWN-GRADE 60. (TOP & BOTTOM LAYER)
- 4 EA. CONAC WIRE LOOP LIFTS REQUIRED (MIN.)

#5 BAR CUT LIST
4 EA. @ 73" LG.
10 EA. @ 48" LG.

PRODUCTION WORK ORDER	PRODUCT I.D.: BX3660-08TS024036	DESCRIPTION: CURB INLET TRANSITION SLAB 36" X 60" X 8"	
QUALITY CONTROL CHECKLIST	PRODUCT VIEW: RIGHT SIDE UP	CUSTOMER: SCOTTY'S CONTRACTING & STONE LLC	
☐ ALL DIMENSIONS CORRECT.	PLANT: BEAVER DAM, KY.	PROJECT: KYTC CHRISTIAN CO. CALL 100 (ID 241018)	
☐ LIFTERS INSTALLED.	WEIGHT: 2,073 LBS.	STRUCTURE: 234 (425+20 RT) (SEC. P2)	
☐ OPENING CENTERED.	TOP SECTION JOINT: TONGUE	QUOTE/ORDER NO: 24-4208	
☐ REINFORCING CORRECT.	BASE SECTION JOINT: FLAT	PC: C. GOFF	DRAWING: S. FELLETTER
☐ SURFACE QUALITY ACCEPTABLE.	QC CHECK INITIALS:	DATE: 07/30/26	SCALE: NTS / PG. 1 of 1
☐ EDGES CHAMFERED.			
☐ ALL PATCHWORK ACCEPTABLE.			

THIS DRAWING IS THE PROPERTY OF INFRASTRUCTURE PRECAST, INC. ANY USE OR DUPLICATION OF THIS DRAWING WITHOUT PRIOR AUTHORIZATION IS STRICTLY PROHIBITED.

Job Name: 24-4208 - KYTC Christian Co. Call 100 (ID 241018) Job Location: Hopkinsville, KY Contractor: Scotty's Contracting & Stone, LLC	Plant: Beaver Dam 7/30/2026 8:57:23 AM	Tech: J. Horsley PC: C. Goff	

Structure ID: 242 (427+72 LT)

P2 BX024024-08LD08S BX FLAT LID 8inW SPEC. (KY JB-B1) F/F

P3) CASTING (cast in) - 0	0 lb
P2) 24" x 24" - BX FLAT LID 8inW SPEC. (KY JB-B1) F/F - 8"	770 lb
P1) 24" x 24" - BOX BASE 8inW, 8inF, Variable Ht F/n - 47"	4691 lb
1) CASTING - HOE KY-206 F/C (KY TY1)	206 lb
1) 24" x 24" - Conseal CS-102 1.00"	0 lb
2) Hole - 20	0 lb
Structure Total:	5667 lb

Structure Notes: .
KYTC STATE PROJECT
1. KYTC JUNCTION BOX B1 / PER ASTM C913 SPEC'S.
2. CONCRETE = 4,000 PSI AT 28 DAYS.
3. TOP SLAB w KYTC TYPE 1 F/C CAST FLUSH.
.
REINFORCING PER ASTM A615 (GRADE 60).
- TOP SLAB (As. 62) #5 BARS AT 6" C.C.E.W.
- WALLS (As .31) #5 BARS AT 12" C.C.E.W.
- FLOOR (As .31) #5 BARS AT 12: C.C.E.W.

NOTES:
1. MANUFACTURED TO ASTM C-913 (LATEST REVISION).
2. CONCRETE: 4,000 PSI AT 28 DAYS.
3. REINFORCING: #5 BAR @ 6" C.C. E.W. (GRADE 60).

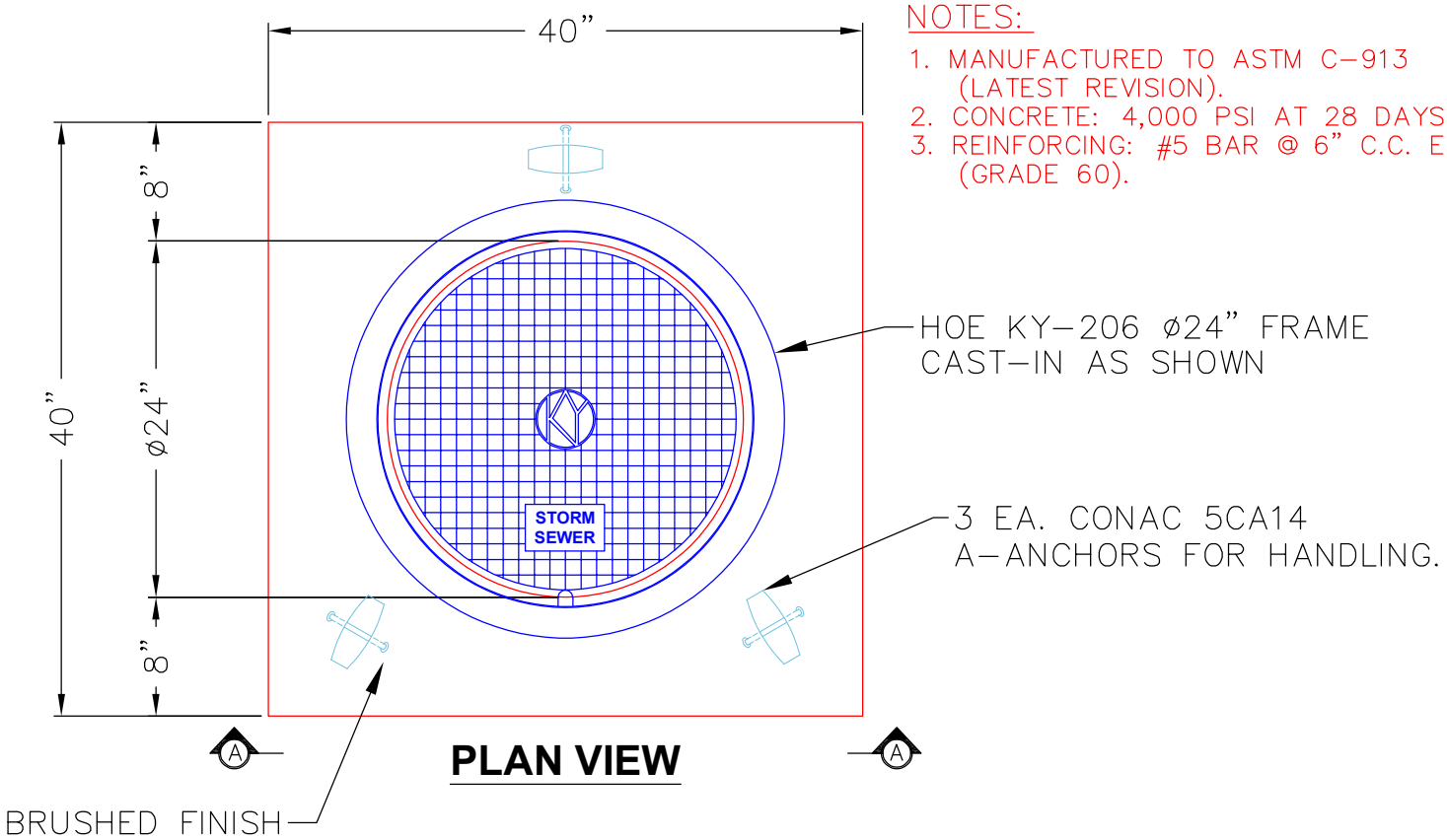

PLAN VIEW

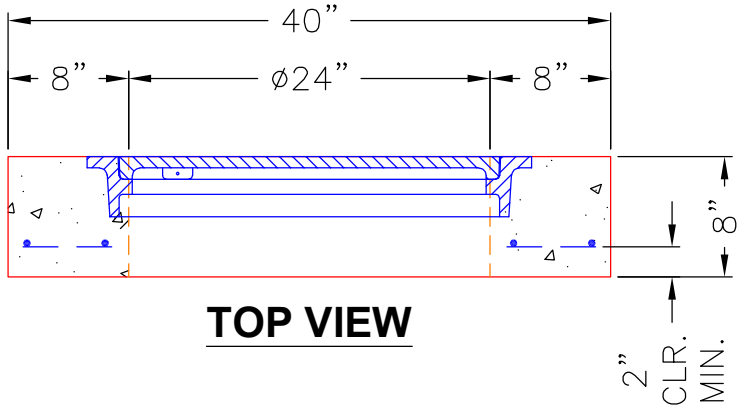

TOP VIEW

Coating (Int): Coating (Ext):	Seam Up: Flat Seam Dn: Flat	Wall Thickness: 8"	Height (Ext): 8"	Weight (Net): 770 lb Volume (Net): 0.2cu.yd

Job Name: 25-3193 - KYTC Kenton Co Call 328 (251320) Job Location: Independence, KY Contractor: Eaton Asphalt	Plant: 100 7/1/2026 12:33:12 PM	Tech: Jared - A PC: J. Jarvis	

Structure ID: 474

P2 BX036036-08TS024036 CB TRANSITION SLAB 24"X36" HOLE

P4) 24" x 120" - CB INLET KY A 10' TOP LEFT - 10"	3400 lb
P3) 24" x 120" - CB INLET KY A 10' BOTTOM LEFT - 18"	5270 lb
P2) 36" x 36" - CB TRANSITION SLAB 24"X36" HOLE - 8"	1235 lb
P1) 36" x 36" - BOX BASE 8inW, 8inF - 54"	6701 lb
1) CASTING - HOE KY-206 F/C (KY TY1)	206 lb
1) 36" x 36" - Conseal CS-102 1.00"	0 lb
1) 24" x 36" - Conseal CS-102 1.00"	0 lb
2) Hole - 32	0 lb
1) Hole - 24	0 lb
2) Hole - 8	0 lb
Structure Total:	16812 lb

Structure Notes: .
** KYTC STATE PROJECT **
1. HOE KY 206 F/C (KY TY1) PROVIDED BY ICAST.
2. CONCRETE = 4,000 PI AT 28 DAYS.
3. REINFORCING PER ASTM A615 (GRADE 60).
- TOP PHASE (As .62) #5 BARS AT 6" C.C.E.W.
- WALLS (As .31) #5 BARS AT 12" C.C.E.W.
- FLOOR (As .31) #5 BARS AT 12" C.C.E.W.

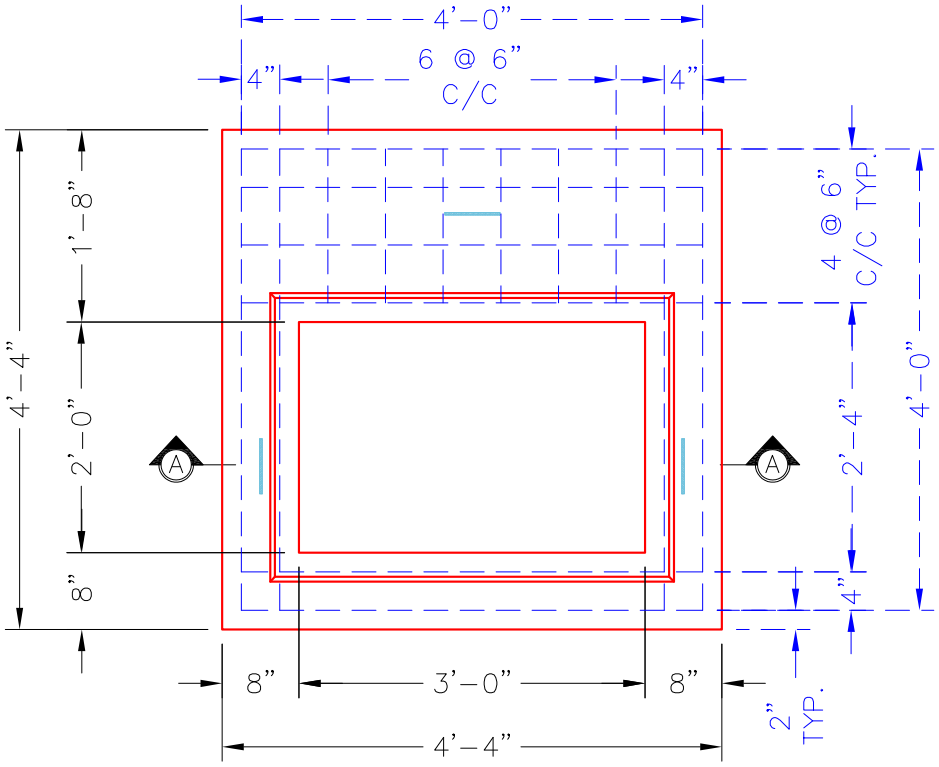

PLAN VIEW

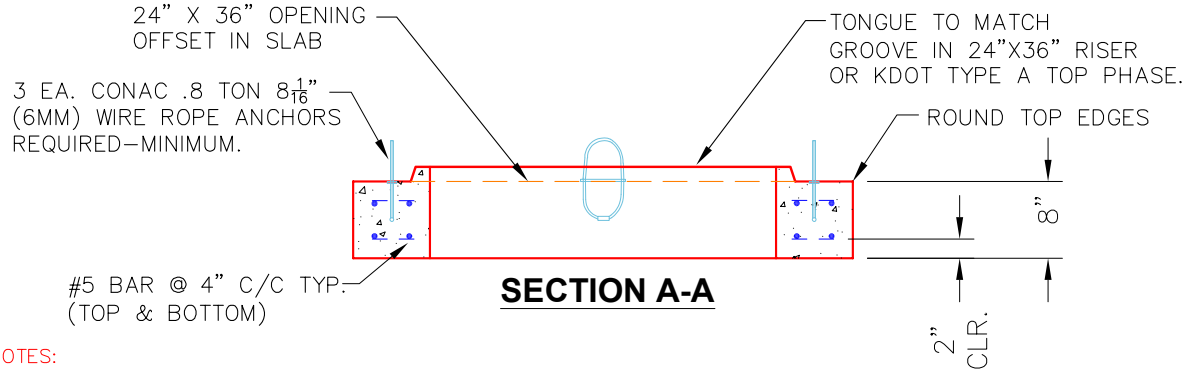

SECTION A-A

NOTES:

-CONCRETE: 4500 PSI @ 28 DAYS.
-REINFORCING: #5 BAR @ 4" & 6" C/C-GRADE 60. (TOP & BOTTOM LAYERS).
-3 EA. CONAC WIRE LOOP LIFTERS REQUIRED.

#5 BAR CUT LIST
20 EA. @ 48" LG.
12 EA. @ 16" LG.

Coating (Int): Coating (Ext):	Seam Up: Tongue Seam Dn: Flat	Wall Thickness: 8"	Height (Ext): 8"	Weight (Net): 1235 lb Volume (Net): 0.32cu.yd

Job Name: 25-3193 - KYTC Kenton Co Call 328 (251320) Job Location: Independence, KY Contractor: Eaton Asphalt	Plant: 100 7/1/2026 12:33:14 PM	Tech: Jared - A PC: J. Jarvis	

Structure ID: 468

P2 BX024030-08LD08-15X27 CB FLAT TOP 8"W w/15"x27" HOLE

P3) 15" x 27" - P.I.P. - BY OTHERS - 8"	0 lb
P2) 24" x 30" - CB FLAT TOP 8"W w/15"x27" HOLE - 8"	963 lb
P1) 24" x 30" - BOX BASE 8inW, 8inF, Variable Ht - 40"	4607 lb
1) CASTING - HOE KY-230-G F/G (GRADE)	237 lb
1) 24" x 30" - Conseal CS-102 1.00"	0 lb
1) 15" x 27" - Conseal CS-102 1.00"	0 lb
1) Hole - 24	0 lb
2) Hole - 4	0 lb
Structure Total:	5807 lb

Structure Notes: .
KYTC STATE PROJECT
1. HOE KY-230-G F/G (GRADE) PROVIDED BY ICAST.
2. KYTC DBI TYPE 13G / ASTM C-913 SPEC'S.
3. CONCRETE = 4,000 PSI AT 28 DAYS.
4. REINFORCING PER ASTM A615 (GRADE 60).
- TOP SLAB (As .62) #5 BARS AT 6" C.C.E.W.
- WALLS (As .31) #5 BARS AT 12" C.C.E.W..
- FLOOR (As .31) #5 BARS AT 12" C.C.E.W.
5. STUB #5 BARS 12" OUT OF THE TOP OF THE SLAB

(SPACED AT 12" CC) AROUND THE 15" X 27" HOLE

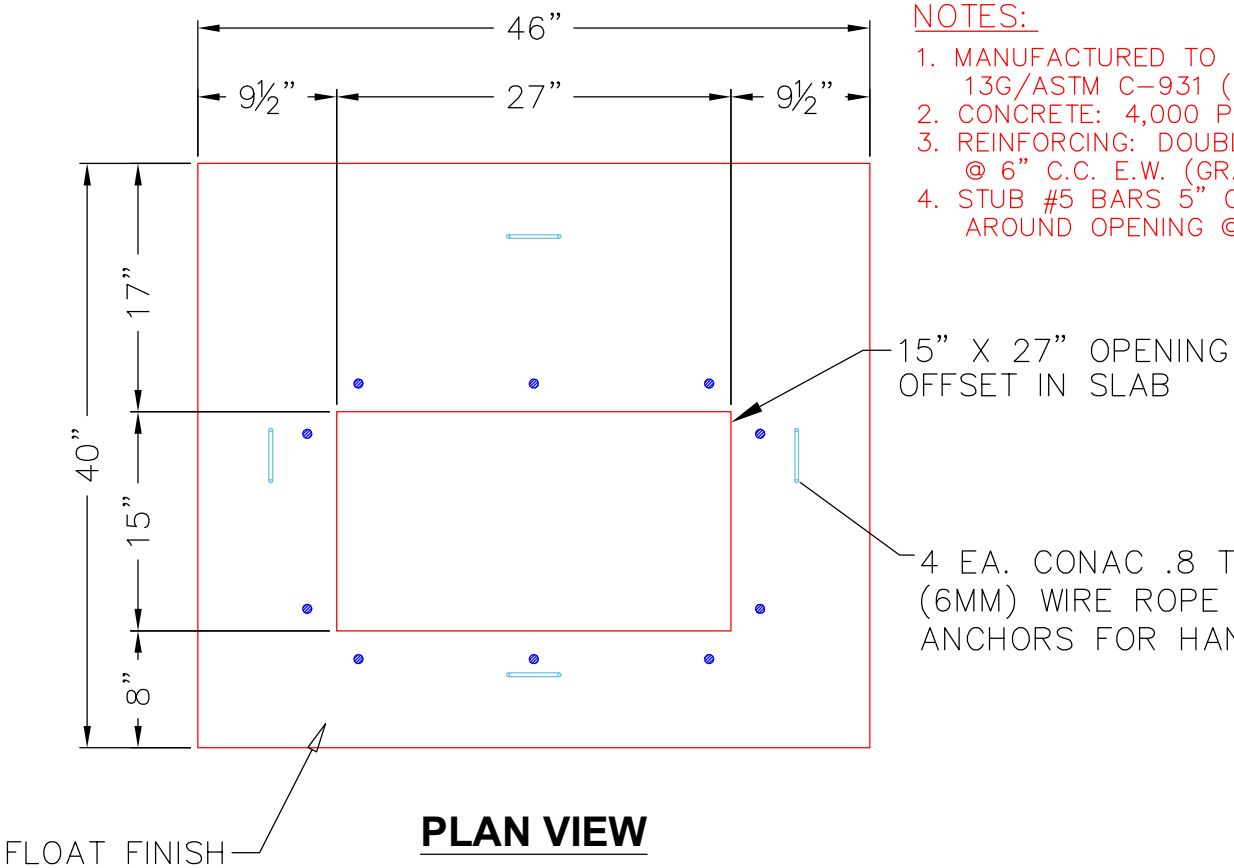

NOTES:
1. MANUFACTURED TO KYTC DBI TYPE 13G/ASTM C-931 (LATEST REVISION).
2. CONCRETE: 4,000 PSI AT 28 DAYS.
3. REINFORCING: DOUBLE MAT #5 BAR @ 6" C.C. E.W. (GRADE 60).
4. STUB #5 BARS 5" OUT TOP SLAB AROUND OPENING @ 12" C/C.

PLAN VIEW

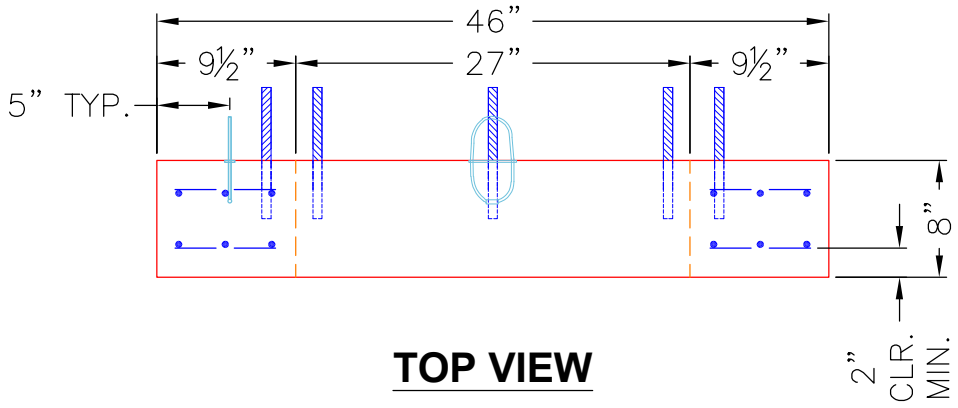

TOP VIEW

Coating (Int): Coating (Ext):	Seam Up: Flat Seam Dn: Flat	Wall Thickness: 8"	Height (Ext): 8"	Weight (Net): 963 lb Volume (Net): 0.25cu.yd

Job Name: 25-3193 - KYTC Kenton Co Call 328 (251320) Job Location: Independence, KY Contractor: Eaton Asphalt	Plant: 100 7/1/2026 12:33:18 PM	Tech: Jared - A PC: J. Jarvis	

Structure ID: 458

P2 BX024030-08LD08-15X27 CB FLAT TOP 8"W w/15"x27" HOLE

P3) 15" x 27" - P.I.P. - BY OTHERS - 8"	0 lb
P2) 24" x 30" - CB FLAT TOP 8"W w/15"x27" HOLE - 8"	963 lb
P1) 24" x 30" - BOX BASE 8inW, 8inF, Variable Ht - 40"	4767 lb
1) CASTING - HOE KY-230-G F/G (GRADE)	237 lb
1) 24" x 30" - Conseal CS-102 1.00"	0 lb
1) 15" x 27" - Conseal CS-102 1.00"	0 lb
1) Hole - 20	0 lb
2) Hole - 4	0 lb
Structure Total:	5967 lb

Structure Notes: .
KYTC STATE PROJECT
1. HOE KY-230-G F/G (GRADE) PROVIDED BY ICAST.
2. KYTC DBI TYPE 13G / ASTM C-913 SPEC'S.
3. CONCRETE = 4,000 PSI AT 28 DAYS.
4. REINFORCING PER ASTM A615 (GRADE 60).
- TOP SLAB (As .62) #5 BARS AT 6" C.C.E.W.
- WALLS (As .31) #5 BARS AT 12" C.C.E.W..
- FLOOR (As .31) #5 BARS AT 12" C.C.E.W.
5. STUB #5 BARS 12" OUT OF THE TOP OF THE SLAB

(SPACED AT 12" CC) AROUND THE 15" X 27" HOLE

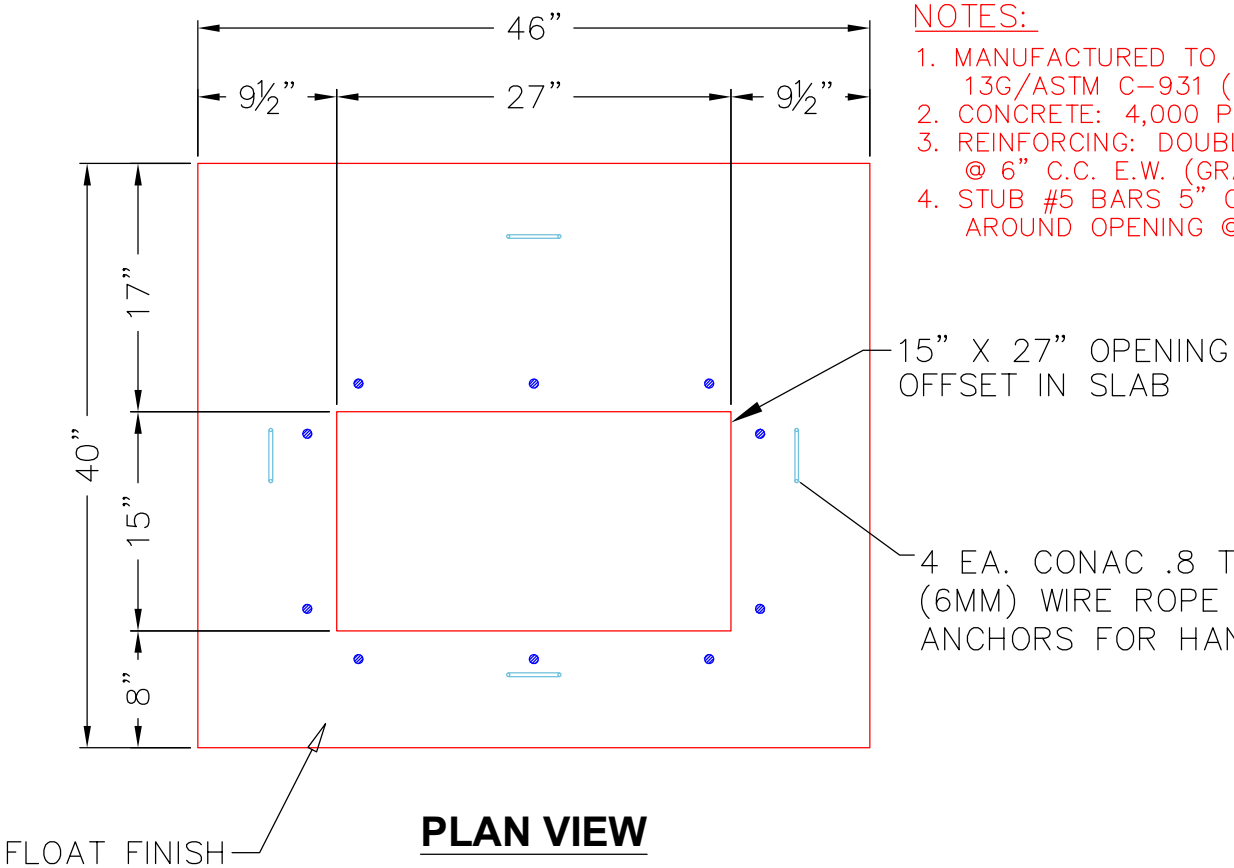

NOTES:
1. MANUFACTURED TO KYTC DBI TYPE 13G/ASTM C-931 (LATEST REVISION).
2. CONCRETE: 4,000 PSI AT 28 DAYS.
3. REINFORCING: DOUBLE MAT #5 BAR @ 6" C.C. E.W. (GRADE 60).
4. STUB #5 BARS 5" OUT TOP SLAB AROUND OPENING @ 12" C/C.

PLAN VIEW

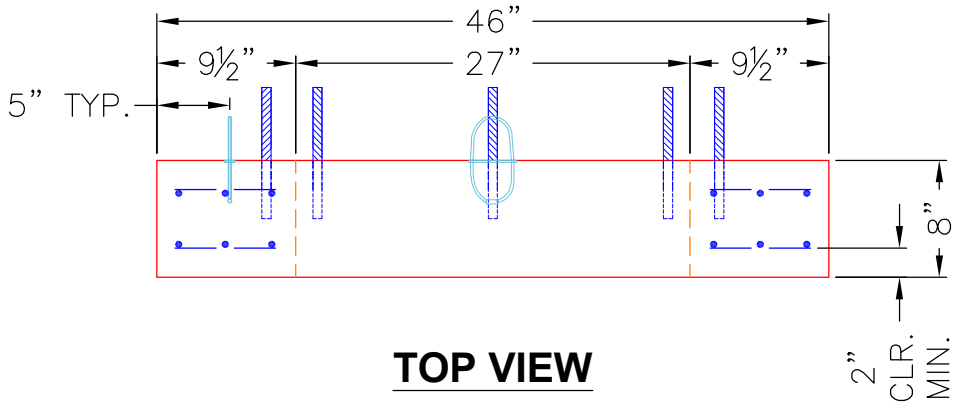

TOP VIEW

Coating (Int): Coating (Ext):	Seam Up: Flat Seam Dn: Flat	Wall Thickness: 8"	Height (Ext): 8"	Weight (Net): 963 lb Volume (Net): 0.25cu.yd

GENERAL NOTES

1. MANUFACTURED TO ASTM C1577 (LATEST REVISION).
2. CONCRETE: 5,000 PSI AT 28 DAYS.
3. LOAD REQUIREMENTS = KY-HL93 (KY TABLE1).
4. COVER DEPTH = 4' TO 6'.
5. REINFORCING: PER ASTM C1577 (GRADE 60). SEE ATTACHED STAMPED DESIGN CALCULATIONS.
6. BOX CULVERT TO BE SEALED WITH CONCRETE SEALANTS, INC. CS-102 ROLL BUTYL MASTIC. (SUPPLIED BY ICAST).
7. EXTERIOR JOINT WRAP TO BE 12" WIDE CS212.
8. WEIGHT: 36" X 30" X 69" LONG SECTION = 5,188 LBS.

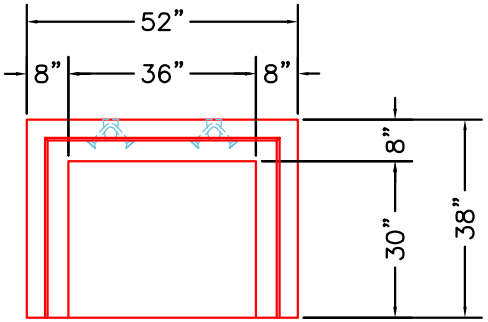

END VIEW

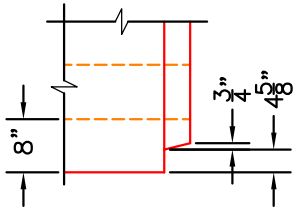

JOINT DETAIL (TYP.)
NTS

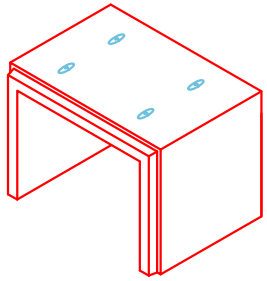

COMPONENT ISOMETRIC VIEW

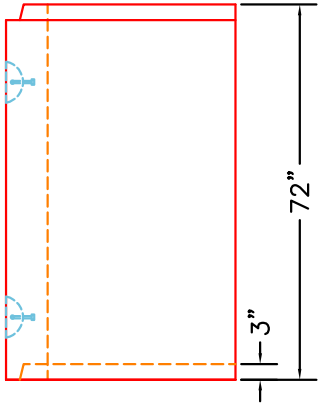

VIEW A
UPRIGHT IN MOLD

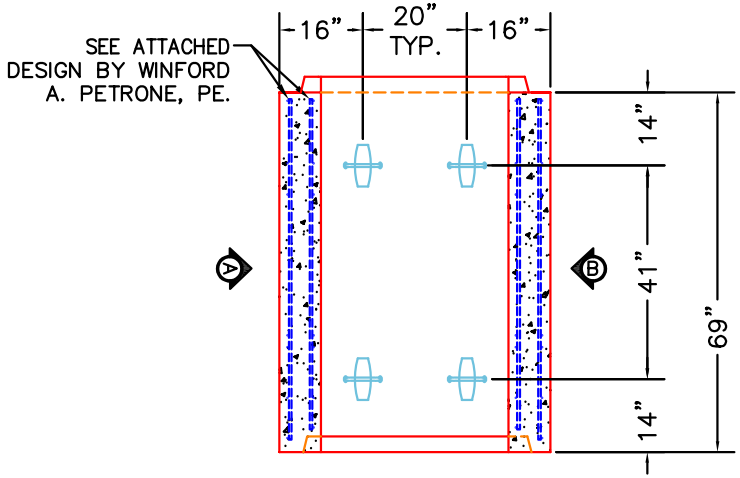

PLAN VIEW
UPRIGHT IN MOLD

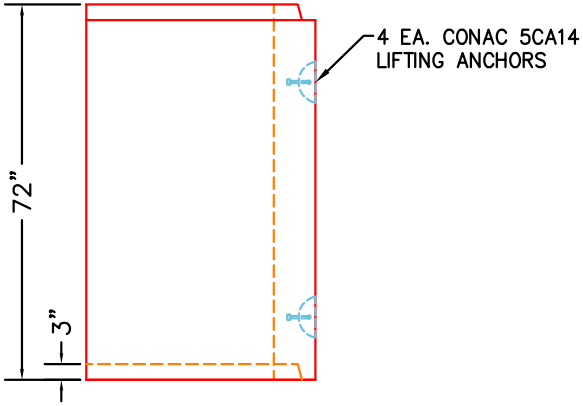

VIEW B
UPRIGHT IN MOLD

PRODUCTION WORK ORDER	PRODUCT I.D.: CBS	DESCRIPTION: 36" X 30" X 69" LONG 3-SIDED BOX CULVERT	
QUALITY CONTROL CHECKLIST	PRODUCT VIEW: RIGHT SIDE UP	CUSTOMER: CLEARY CONSTRUCTION INC	
☐ ALL DIMENSIONS CORRECT.	PLANT: BEAVER DAM, KY.	PROJECT: UK BP9 SITE THERMAL AND ELECTRIC UTILITIES	
☐ LIFTERS INSTALLED INSIDE.	WEIGHT: 5,188 LBS.	STRUCTURE: 36" X 30" X 69" BOX CULVERT (P5)	
☐ RECESS WITH HAUNCHES CORRECT.	TOP JOINT: TONGUE	SALES ORDER/QUOTE NO: 25-2504	
☐ REINFORCING CORRECT.	BOTTOM JOINT: GROOVE	PC: C. GOFF	DRAWING: S. FELLETTER
☐ SURFACE QUALITY ACCEPTABLE.	QC CHECK INITIALS:	DATE: 07/31/26	SCALE: NTS / PG. 1 of 1
☐ LIFTERS INSTALLED OUTSIDE.			
☐ PRODUCT SQUARE.			

THIS DRAWING IS THE PROPERTY OF INFRASTRUCTURE PRECAST, INC. ANY USE OR DUPLICATION OF THIS DRAWING WITHOUT PRIOR AUTHORIZATION IS STRICTLY PROHIBITED.

58/60

NOTE: SEE "PRECAST DESIGN SUBMITTALS, CONCRETE COMPONENTS" SHEET FOR SUMMARY OF BUILDING AND DESIGN CODES, MATERIALS REQUIREMENTS, AND DESIGN LOADS.

NOTE: SEE ICAST WORKING DRAWINGS FOR ADDITIONAL INFORMATION AND LOCATION OF EACH COMPONENT.

STATE OF KENTUCKY
WINFORD A. PETRONE
24598
LICENSED PROFESSIONAL ENGINEER
07-27-26

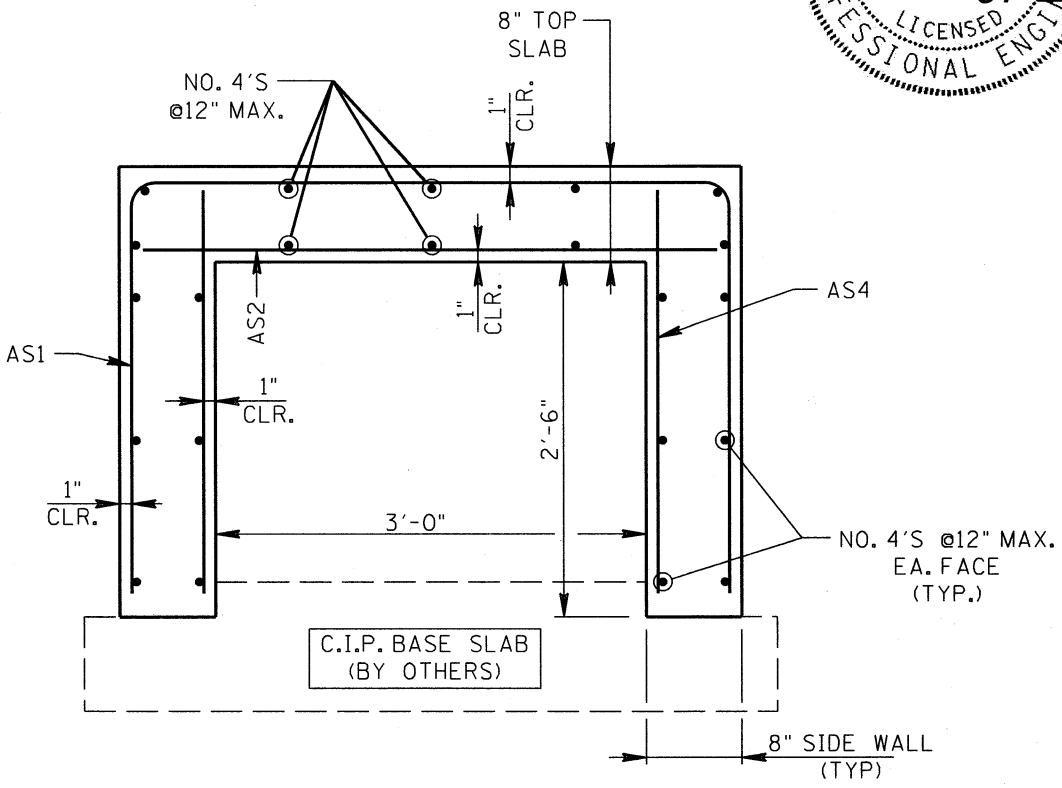

PRECAST TUNNEL SECTION

3'-0"X2'-6" STEAM TUNNEL RUN #2
NON-BEND UNITS

NOTE: CLEARANCE BETWEEN CUT-OFF ENDS OF BARS AND OUTSIDE FACES OF CONCRETE=2".

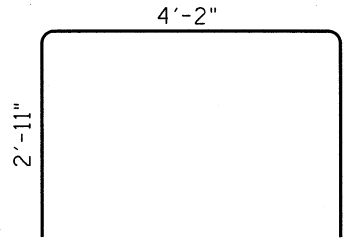

BARS AS1

LOCATION	REINFORCING STEEL REQUIRED	COMMENTS
AS1	NO. 4'S@10"	BEND AS SHOWN
AS2	NO. 4'S@10"	EXTEND TO EXTER. FACES
AS3	NOT USED	NOT USED
AS4	NO. 4'S@12"	

AS1, AS2, AND AS4 REINFORCING BARS

Fy-min=60 K.S.I.

THIS SECTION TO BE USED FOR ALL RUN #2: NON-ANGLED UNITS, RECTANGULAR IN PLAN VIEW.

SK-4

PRECAST STEAM TUNNELS: RUN NO. 2, TYPICAL UNIT SECTION

UK BP9 SITE THERMAL AND ELECTRIC: 3'-0"X2'-6" STEAM TUNNEL RUN #2

GENERAL NOTES

1. MANUFACTURED TO ASTM C1577 (LATEST REVISION).
2. 2. CONCRETE: 5,000 PSI AT 28 DAYS
3. .LOAD REQUIREMENTS = KY-HL93 (KY TABLE1).
4. COVER DEPTH = 4' TO 6'.
5. REINFORCEMENT PER ATTACHED DESIGN BY WINFORD A. PETRONE, PE
6. BOX CULVERT TO BE SEALED WITH CONCRETE SEALANTS, INC. CS-102 ROLL BUTYL MASTIC. (SUPPLIED BY ICAST).
7. EXTERIOR JOINT WRAP TO BE 12" WIDE CS212.
8. WEIGHT: 68" X 36" X 69" LONG SECTION = 7,226 LBS.

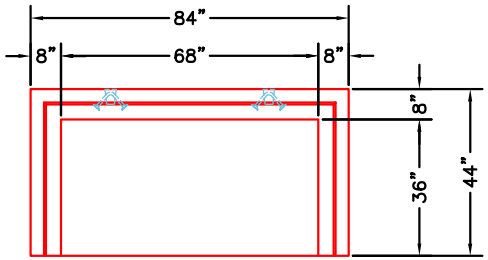

END VIEW

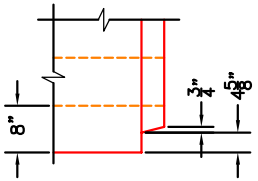

JOINT DETAIL (TYP.)
NTS

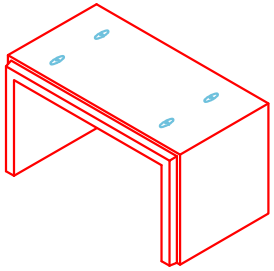

COMPONENT ISOMETRIC VIEW

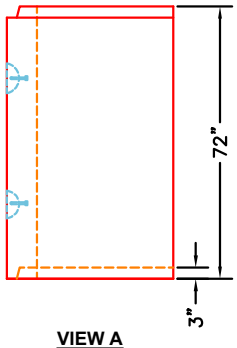

VIEW A
UPRIGHT IN MOLD

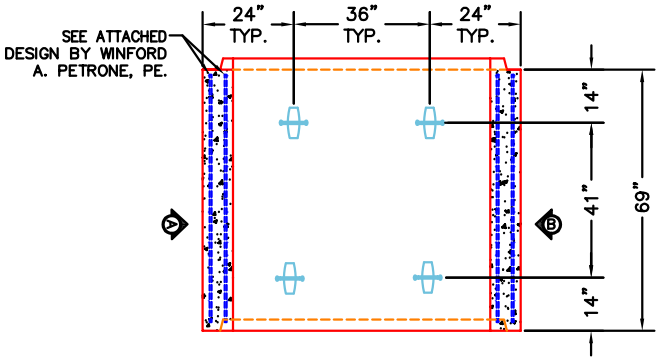

PLAN VIEW
UPRIGHT IN MOLD

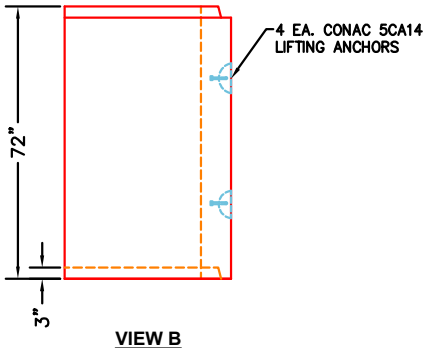

VIEW B
UPRIGHT IN MOLD

PRODUCTION WORK ORDER	PRODUCT I.D.: CBS	DESCRIPTION:68" X 36" X 69" LONG 3-SIDED BOX CULVERT	
QUALITY CONTROL CHECKLIST	PRODUCT VIEW: RIGHT SIDE UP	CUSTOMER: CLEARY CONSTRUCTION INC	
☐ ALL DIMENSIONS CORRECT.	PLANT: BEAVER DAM, KY.	PROJECT: UK BP9 SITE THERMAL AND ELECTRIC UTILITIES	
☐ LIFTERS INSTALLED INSIDE.	WEIGHT: 7,226 LBS.	STRUCTURE: 68" X 36" X 69" BOX CULVERT (P4)	
☐ RECESS WITH HAUNCHES CORRECT.	TOP JOINT: TONGUE	SALES ORDER/QUOTE NO: 25-2504	
☐ REINFORCING CORRECT.	BOTTOM JOINT: GROOVE	PC: C. GOFF	DRAWING: S. FELLETTER
☐ SURFACE QUALITY ACCEPTABLE.	QC CHECK INITIALS:	DATE: 07/31/26	SCALE: NTS / PG. 1 of 1
☐ LIFTERS INSTALLED OUTSIDE.			
☐ PRODUCT SQUARE.			

THIS DRAWING IS THE PROPERTY OF INFRASTRUCTURE PRECAST, INC. ANY USE OR DUPLICATION OF THIS DRAWING WITHOUT PRIOR AUTHORIZATION IS STRICTLY PROHIBITED.

NOTE: SEE "PRECAST DESIGN SUBMITTALS, CONCRETE COMPONENTS" SHEET FOR SUMMARY OF BUILDING AND DESIGN CODES, MATERIALS REQUIREMENTS, AND DESIGN LOADS.

NOTE: SEE ICAST WORKING DRAWINGS FOR ADDITIONAL INFORMATION AND LOCATION OF EACH COMPONENT.

STATE OF KENTUCKY
WINFORD A. PETRONE
24598
LICENSED
PROFESSIONAL ENGINEER
07-27-26

55/60

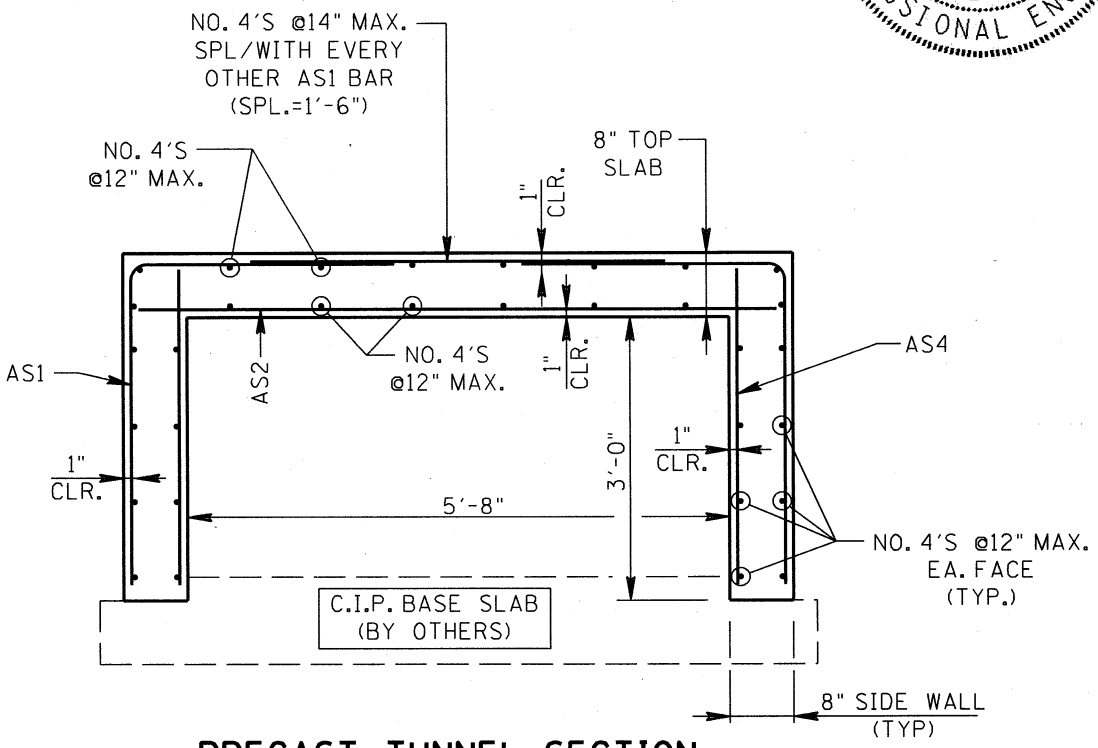

PRECAST TUNNEL SECTION

5'-8"X3'-0" STEAM TUNNEL RUN #1
NON-WEDGED UNITS

NOTE: CLEARANCE BETWEEN CUT-OFF ENDS OF BARS AND OUTSIDE FACES OF CONCRETE=2".

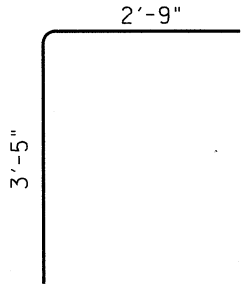

BARS AS1

LOCATION	REINFORCING STEEL REQUIRED	COMMENTS
AS1	NO. 4'S@7"	BEND AS SHOWN
AS2	NO. 4'S@7"	EXTEND TO EXTER. FACES
AS3	NOT USED	NOT USED
AS4	NO. 4'S@12"	

AS1, AS2, AND AS4 REINFORCING BARS

Fy-min=60 K.S.I.

THIS SECTION TO BE USED FOR ALL RUN #1: NON-WEDGED UNITS, RECTANGULAR IN PLAN VIEW.

SK-1

PRECAST STEAM TUNNELS: RUN NO. 1, TYPICAL UNIT SECTION

UK BP9 SITE THERMAL AND ELECTRIC: 5'-8"X3'-0" STEAM TUNNEL RUN #1

Job Name: 25-3187 - Carter Caves WTP Upgrades Ph 3 Job Location: Olive Hill, KY Contractor: Walker Principles	Plant: 100 7/8/2026 9:06:56 AM	Tech: J. Horsley PC: E. Bradley	

Structure ID: RAS/WAS VV

P1 BX7272-08W08F06EB-VF BX BASE w/FLANGE 08W/08F/06EF

P2) 72" x 72" - CB FLAT TOP 8"W w/36"X36 Hatch - 8"	4329 lb
P1) 72" x 72" - BX BASE w/FLANGE 08W/08F/06EF - 88"	25544 lb
1) LADDER (Alum.) - HALLIDAY L1B 72in Wall mount ladder	50 lb
1) LADDER (Alum.) - HALLIDAY L1EAA Ladder Extension Safey Post	65 lb
1) HATCH (Alum.) - HALLIDAY W1S 36"x36"	78 lb
1) SECONDARY POUR - WALLS	0 lb
1) 72" x 72" - Conseal CS-102 1.00"	0 lb
5) A-Lok - 0150	5 lb
Structure Total:	30071 lb

Structure Notes: .
1. PER ASTM C913 SPECIFICATIONS.
2. CONCRETE = 4,500 PSI AT 28 DAYS.
3. NO STEPS / NO INVERT CHANNEL.
4. HATCH BY ICAST (HALLIDAY W1S 36"x36")
.
REINFORCING PER ASTM A615 (GRADE 60).
- TOP SLAB (As .62) #5 BARS AT 6" C.C.E.W.
- RISER/WALLS (As .18)

Rim: 890.5' Rim to Invert: 7.96' Slack: 0" Sump: 0.48" Step Position:

Position	Elev	Angle	Ext. (cw)	Pipe	Pipe OD	Connector	Hole	Horz Size	Up (_)	Offset
Invert 1	883.83'	90°	44"	4" DI	4.75"	A-Lok 0150	5.25"	5.25"	15.335"	0"
Invert 2	883.83'	180°	38"	4" DI	4.75"	A-Lok 0150	5.25"	5.25"	15.335"	-6"
Invert 3	883.83'	270°	28"	4" DI	4.75"	A-Lok 0150	5.25"	5.25"	15.335"	-16"
Invert 4	882.54'	270°	44"	4" DI	4.75"	A-Lok 0150	5.25"	5.25"	-0.145"	0"
Invert 5	883.83'	270°	60"	4" DI	4.75"	A-Lok 0150	5.25"	5.25"	15.335"	16"
Invert 6										
Invert 7										
Invert 8										

RIGHT-SIDE UP VIEW (int. dimensions) UPSIDE-DOWN VIEW (int. dimenions)

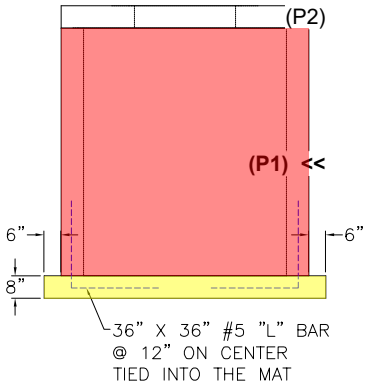

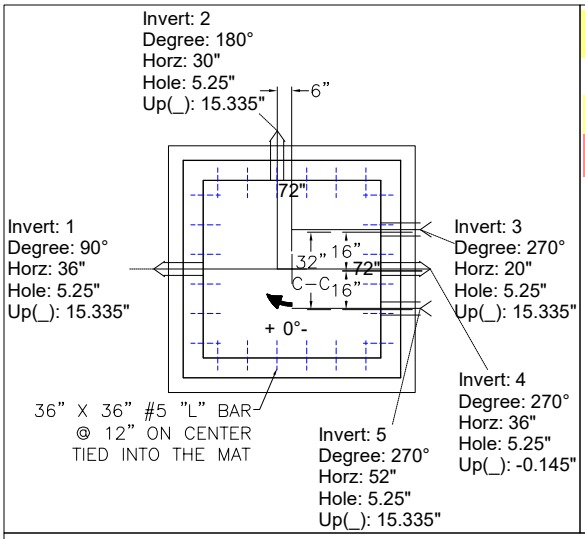

FIRST POUR DRAWING

WEIGHTS:

FIRST POUR: 6,713 LBS

SECOND POUR: 18,831 LBS

TOTAL: 25,544 LBS

INSIDE WALL DIMENSIONS

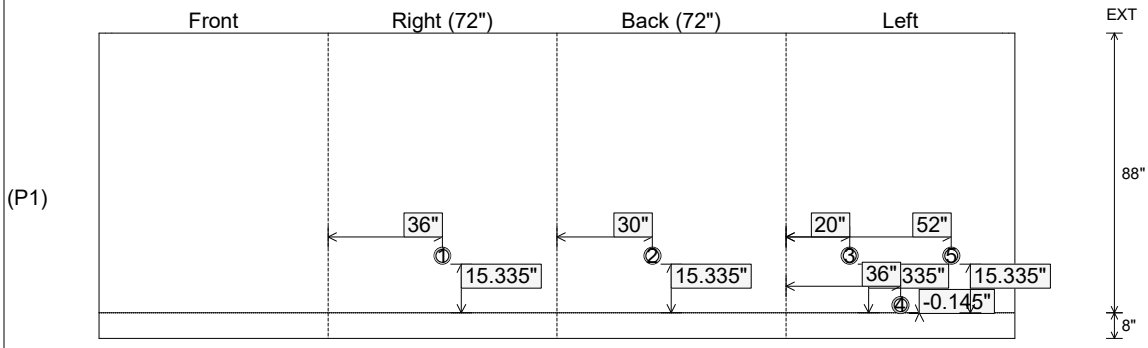

Coating (Int): Coating (Ext):	Seam Up: Flat Seam Dn: n/a	Wall Thickness: 8" Floor Height: 8"	Height (Int): 88" Height (Ext): 96"	Weight (Net): 25544 lb Volume (Net): 6.52cu.yd

Job Name: 25-3187 - Carter Caves WTP Upgrades Ph 3 Job Location: Olive Hill, KY Contractor: Walker Principles	Plant: 100 7/8/2026 9:06:56 AM	Tech: J. Horsley PC: E. Bradley	

Structure ID: RAS/WAS VV

P1 BX7272-08W08F06EB-VF BX BASE w/FLANGE 08W/08F/06EF

P2) 72" x 72" - CB FLAT TOP 8"W w/36"X36 Hatch - 8"	4329 lb
P1) 72" x 72" - BX BASE w/FLANGE 08W/08F/06EF - 88"	25544 lb
1) LADDER (Alum.) - HALLIDAY L1B 72in Wall mount ladder	50 lb
1) LADDER (Alum.) - HALLIDAY L1EAA Ladder Extension Safey Post	65 lb
1) HATCH (Alum.) - HALLIDAY W1S 36"x36"	78 lb
1) SECONDARY POUR - WALLS	0 lb
1) 72" x 72" - Conseal CS-102 1.00"	0 lb
5) A-Lok - 0150	5 lb
Structure Total:	30071 lb

Structure Notes: .
1. PER ASTM C913 SPECIFICATIONS.
2. CONCRETE = 4,500 PSI AT 28 DAYS.
3. NO STEPS / NO INVERT CHANNEL.
4. HATCH BY ICAST (HALLIDAY W1S 36"x36")
.
REINFORCING PER ASTM A615 (GRADE 60).
- TOP SLAB (As .62) #5 BARS AT 6" C.C.E.W.
- RISER/WALLS (As .18)

Rim: 890.5' Rim to Invert: 7.96' Slack: 0" Sump: 0.48" Step Position:

Position	Elev	Angle	Ext. (cw)	Pipe	Pipe OD	Connector	Hole	Horz Size	Up (_)	Offset
Invert 1	883.83'	90°	44"	4" DI	4.75"	A-Lok 0150	5.25"	5.25"	15.335"	0"
Invert 2	883.83'	180°	38"	4" DI	4.75"	A-Lok 0150	5.25"	5.25"	15.335"	-6"
Invert 3	883.83'	270°	28"	4" DI	4.75"	A-Lok 0150	5.25"	5.25"	15.335"	-16"
Invert 4	882.54'	270°	44"	4" DI	4.75"	A-Lok 0150	5.25"	5.25"	-0.145"	0"
Invert 5	883.83'	270°	60"	4" DI	4.75"	A-Lok 0150	5.25"	5.25"	15.335"	16"
Invert 6										
Invert 7										
Invert 8										

RIGHT-SIDE UP VIEW (int. dimensions) UPSIDE-DOWN VIEW (int. dimenions)

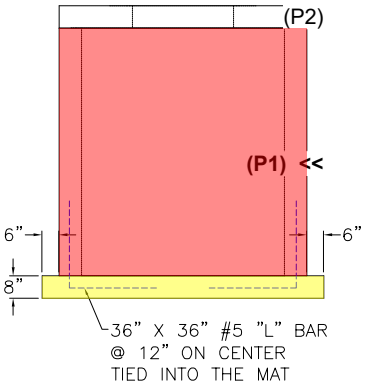

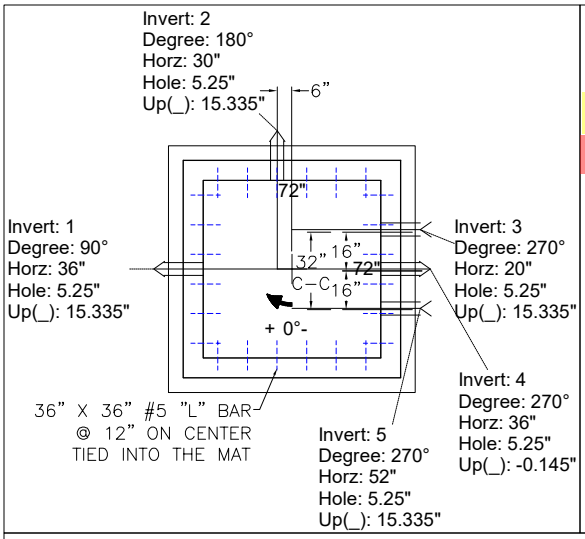

SECOND POUR DRAWING

WEIGHTS:

FIRST POUR: 6,713 LBS

SECOND POUR: 18,831 LBS

TOTAL: 25,544 LBS

INSIDE WALL DIMENSIONS

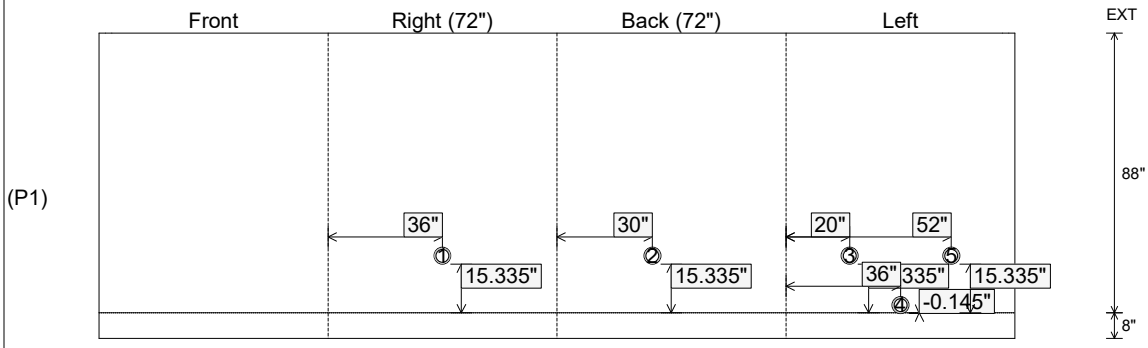

Coating (Int): Coating (Ext):	Seam Up: Flat Seam Dn: n/a	Wall Thickness: 8" Floor Height: 8"	Height (Int): 88" Height (Ext): 96"	Weight (Net): 25544 lb Volume (Net): 6.52cu.yd

Job Name: 26-3001 - Gunnison Way Grease Traps Job Location: Bowling Green, KY 42103 Contractor: Bowling Green Winsupply	Plant: Beaver Dam, KY 7/9/2026 9:44:30 AM	Tech: K. Cardwell PC: T. Lewis	

Structure ID: GT 2

P1 BX60120-06W06F-BA54 BOX BASE 6inW, 6inF F/n

P3) 24" - CASTING HEIGHT - 7"	0 lb
P2) 60" x 120" - CB FLAT TOP 6"W w/(2) 24" HOLES (Grease Trap) F/F - 8"	5775 lb
P1) 60" x 120" - BOX BASE 6inW, 6inF F/n - 54"	16155 lb
1) SECONDARY POUR - Baffle Wall	975 lb
1) 60" x 120" - Conseal CS-102 1.00" (Double)	0 lb
1) 24" - Conseal CS-102 1.00" (Double)	0 lb
2) PSX - 8QRS-S NYLO	13 lb
Structure Total:	22918 lb

FIRST POUR (BASE): 16,155 LBS

SECOND POUR (BAFFLE WALL): 975 LBS

Rim: 5.75' Rim to Invert: 2.667' Slack: 0" Sump: 37" Step Position:

Structure Notes:

1. PER ASTM C-890-13 & ASTM C-913 SPECIFICATIONS
2. CONCRETE: 4,500 PSI AT 28 DAYS
3. REINFORCEMENT: #5 BAR @ 8" C.C. E.W. (GRADE 60) - 2" MIN. REBAR CLEARANCE (TYP)
4. NO FLOW CHANNEL
5. 2 EA. 7" CASTINGS SUPPLIED BY OTHERS
6. LIFTERS: 4 EA. 5CA18 CONAC A-ANCHORS FOR PLANT & FIELD HANDLING - INSTALLED AS SHOWN

Position	Elev	Angle	Ext. (cw)	Pipe	Pipe OD	Connector	Hole	Horz Size	Up (_)	Offset
Invert 1	3.083'	0°	36"	4" PVC SDR35	4.25"	PSX 8QRS-S NYLO	8"	8"	35"	0"
Invert 2	3.25'	180°	36"	4" PVC SDR35	4.25"	PSX 8QRS-S NYLO	8"	8"	37"	0"
Invert 3										

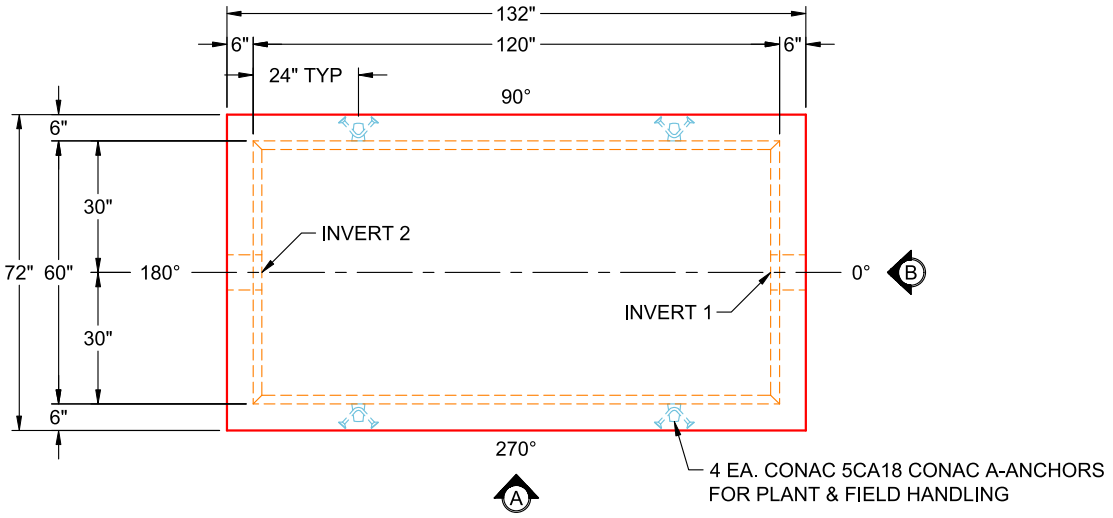

PLAN VIEW
(UPSIDE DOWN)

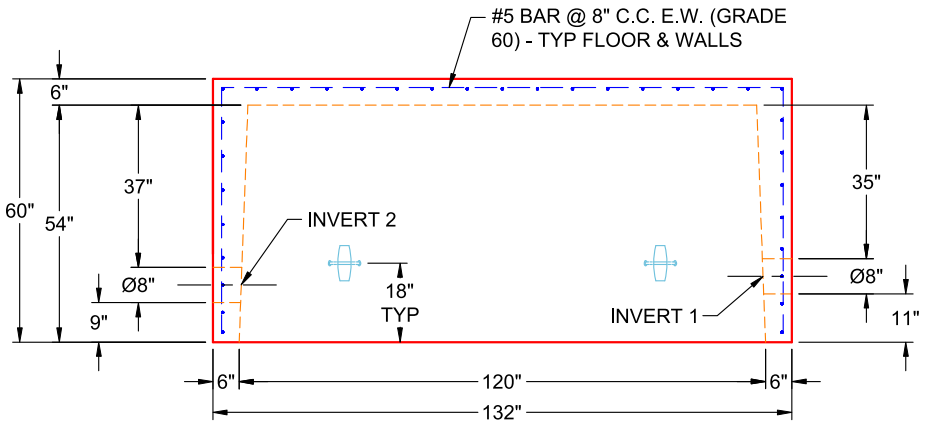

VIEW A
(UPSIDE DOWN)

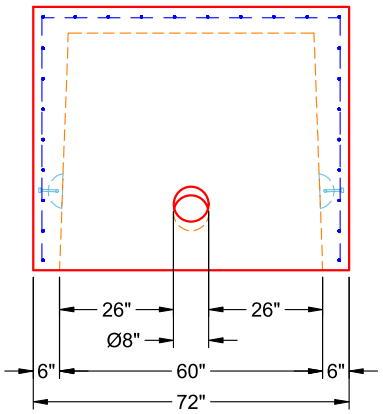

VIEW B
(UPSIDE DOWN)

Job Name: 26-3001 - Gunnison Way Grease Traps Job Location: Bowling Green, KY 42103 Contractor: Bowling Green Winsupply	Plant: Beaver Dam, KY 7/9/2026 9:44:30 AM	Tech: K. Cardwell PC: T. Lewis	

Structure ID: GT 2

P1 BX60120-06W06F-BA54 BOX BASE 6inW, 6inF F/n

P3) 24" - CASTING HEIGHT - 7"	0 lb
P2) 60" x 120" - CB FLAT TOP 6"W w/(2) 24" HOLES (Grease Trap) F/F - 8"	5775 lb
P1) 60" x 120" - BOX BASE 6inW, 6inF F/n - 54"	16155 lb
1) SECONDARY POUR - Baffle Wall	975 lb
1) 60" x 120" - Conseal CS-102 1.00" (Double)	0 lb
1) 24" - Conseal CS-102 1.00" (Double)	0 lb
2) PSX - 8QRS-S NYLO	13 lb
Structure Total:	22918 lb

FIRST POUR (BASE): 16,155 LBS

SECOND POUR (BAFFLE WALL): 975 LBS

Rim: 5.75' Rim to Invert: 2.667' Slack: 0" Sump: 37" Step Position:

Structure Notes:

1. PER ASTM C-890-13 & ASTM C-913 SPECIFICATIONS
2. CONCRETE: 4,500 PSI AT 28 DAYS
3. REINFORCEMENT: #5 BAR @ 8" C.C. E.W. (GRADE 60) - 2" MIN. REBAR CLEARANCE (TYP)
4. DRILL & DOWEL #4 BAR @ 12" C.C. E.W. (GRADE 60) INTO BASE FLOOR FOR BAFFLE WALL TIE-IN - MIN. 4" PENETRATION INTO BASE FLOOR
5. PRIOR TO BAFFLE WALL POUR, ADD STRIP OF CS-231 BETWEEN BAFFLE WALL & TANK WALLS (BOTH SIDES)

Position	Elev	Angle	Ext. (cw)	Pipe	Pipe OD	Connector	Hole	Horz Size	Up (_)	Offset
Invert 1	3.083'	0°	36"	4" PVC SDR35	4.25"	PSX 8QRS-S NYLO	8"	8"	35"	0"
Invert 2	3.25'	180°	36"	4" PVC SDR35	4.25"	PSX 8QRS-S NYLO	8"	8"	37"	0"
Invert 3										

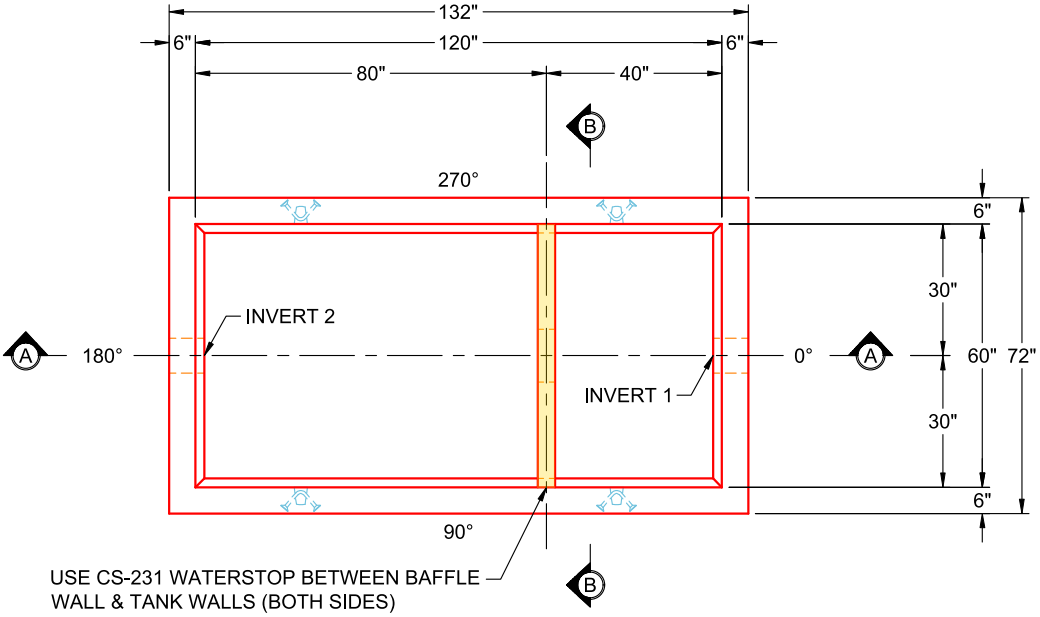

PLAN VIEW
(RIGTH SIDE UP)

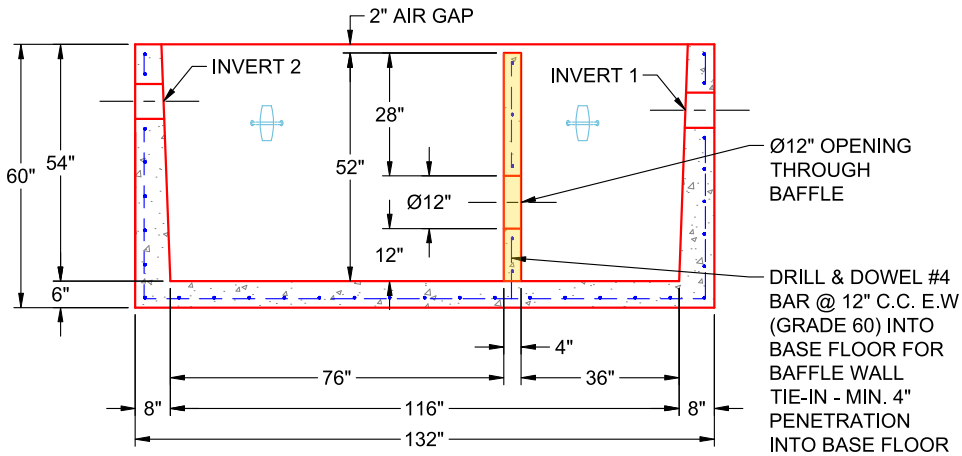

SECTION A-A
(RIGHT SIDE UP)

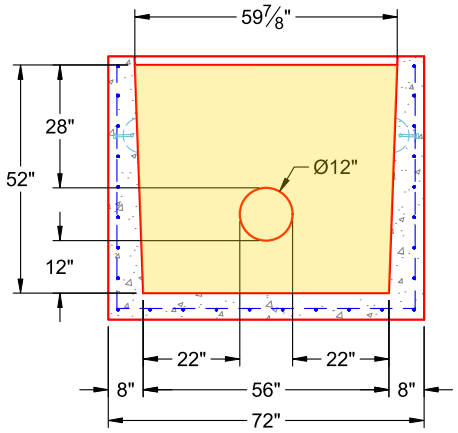

SECTION B-B
(RIGHT SIDE UP)

Job Name: 26-1333 - Mitchell Hill Road Project Job Location: Louisville, KY 40118 Contractor: Hall Contracting of Kentucky Inc	Plant: 100 6/16/2026 1:23:29 PM	Tech: J. Horsley PC: J. Jarvis	

Structure ID: WALL P13-P14

P3 CUSTOM WALL **WALL PANEL 6" THICK F/F**

P4)	77" x 6" - WALL PANEL 6" THICK F/F - 3.00' HT x 6.42' LONG	1398 lb
P3)	77" x 6" - WALL PANEL 6" THICK F/F - 3.00' HT x 6.42' LONG	1398 lb
P2)	77" x 6" - WALL PANEL 6" THICK F/F - 3.00' HT x 6.42' LONG	1398 lb
P1)	77" x 6" - WALL PANEL 6" THICK F/F - 3.00' HT x 6.42' LONG	1398 lb
1)	Hole - 2	0 lb
	Structure Total:	5591 lb

Structure Notes: .
1. PER ASTM C913 SPECIFICATIONS.
2. CONCRETER = 4,000 PSI AT 28" DAYS.
3. SMOOTH FORM FINISH ON THE FRONT SURFACE.
4. 3/4" CHAMFER ON ALL LONG EDGES.

.
REINFORCING PER ASTM A615 (GRADE 60).
-VERTICAL BARS = #4 BARS AT 12" C/C
-HORIZONTAL BARS = #6 BARS EQUALLY SPACED (10" MAX.)

Rim: 696' Rim to Invert: 6.75' Slack: 0" Sump: 63" Step Position:

Position	Elev	Angle	Ext. (cw)	Pipe	Pipe OD	Connector	Hole	Horz Size	Up (_)	Offset
Invert 1										
Invert 2										
Invert 3										
Invert 4										
Invert 5										
Invert 6										
Invert 7										
Invert 8										

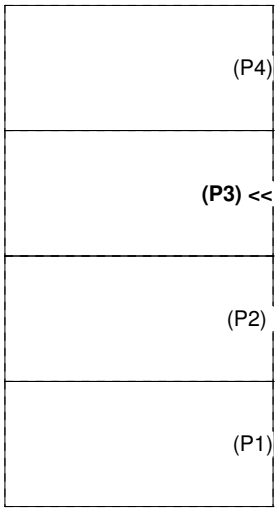

RIGHT-SIDE UP VIEW (int. dimensions)

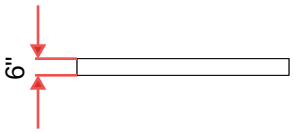

Note:
See attached typical drawing for reinforcing and lifting details.

INSIDE WALL DIMENSIONS

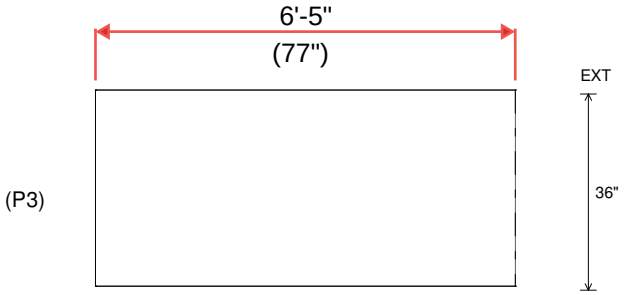

Coating (Int): Coating (Ext):	Seam Up: Flat Seam Dn: Flat	Wall Thickness: 0" Floor Height: 0"	Height (Int): 36" Height (Ext): 36"	Weight (Net): 1398 lb Volume (Net): 0.36cu.yd

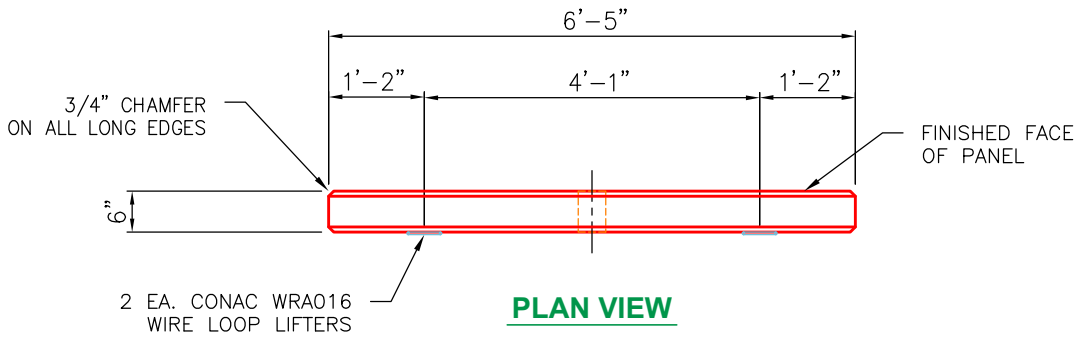

PLAN VIEW

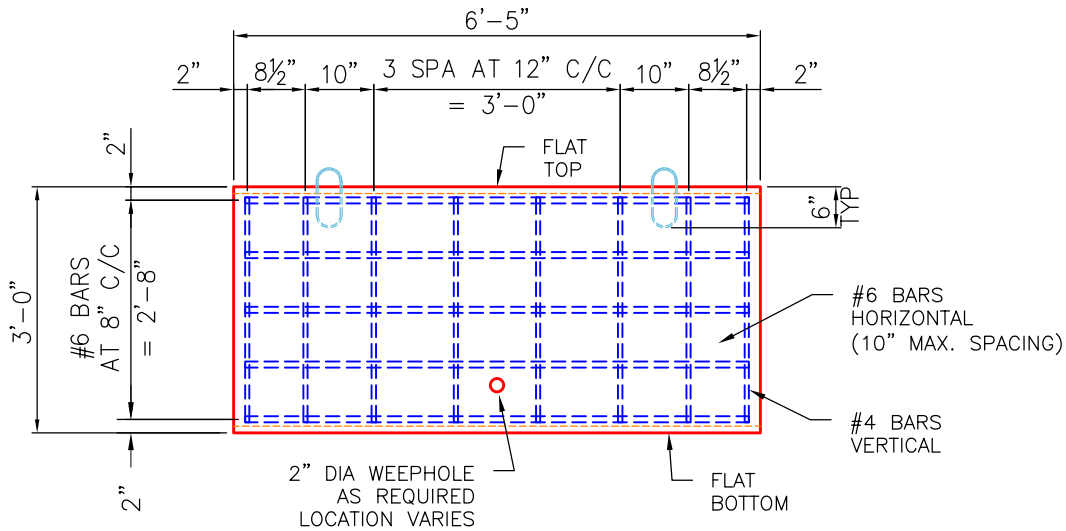

SIDE VIEW

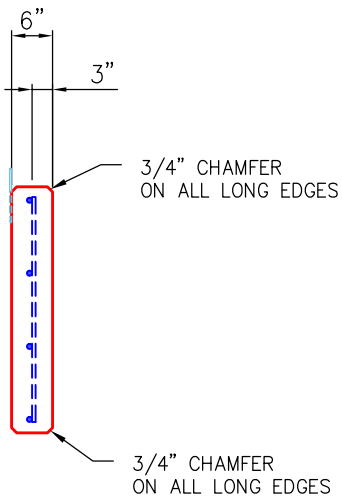

END VIEW

GENERAL NOTES:

1. MANUFACTURED ASTM C913 SPECIFICATIONS.
2. CONCRETE: 4,000 PSI MINIMUM AT 28 DAYS.
3. REINFORCING: AS PER PLAN DESIGN (GRADE 60).
4. CONAC 5CA14 ANCHORS CAST IN FOR HANDLING.
5. WEIGHT = 1,413 LBS
6. 68 REQUIRED.

REVISION INFORMATION	
REV. 0 DATE:	NO REVISIONS TO DATE

SUBMITTAL DESCRIPTION: WALL PANEL 6.50' LG x 6" THK.		
CUSTOMER: HALL CONTRACTING OF KY INC.		
PROJECT: MITCHELL HILL ROAD PROJECT		
STRUCTURE ID.: WALL PANEL 6" THK (78" LG x 36" HT)		
SALES ORDER NO: 26-1333		
CHECK: B. SMITH	DRAWN BY: J. HORSLEY	
DATE: 04/20/26	SCALE: NTS	PG. 1 of 1

THIS DRAWING IS THE PROPERTY OF INFRASTRUCTURE PRECAST, INC. ANY USE OR DUPLICATION OF THIS DRAWING WITHOUT PRIOR AUTHORIZATION IS STRICTLY PROHIBITED.

Job Name: 26-1333 - Mitchell Hill Road Project Job Location: Louisville, KY 40118 Contractor: Hall Contracting of Kentucky Inc	Plant: 100 6/16/2026 1:23:29 PM	Tech: J. Horsley PC: J. Jarvis	

Structure ID: WALL P13-P14

P4 CUSTOM WALL **WALL PANEL 6" THICK F/F**

P4)	77" x 6" - WALL PANEL 6" THICK F/F - 3.00' HT x 6.42' LONG	1398 lb
P3)	77" x 6" - WALL PANEL 6" THICK F/F - 3.00' HT x 6.42' LONG	1398 lb
P2)	77" x 6" - WALL PANEL 6" THICK F/F - 3.00' HT x 6.42' LONG	1398 lb
P1)	77" x 6" - WALL PANEL 6" THICK F/F - 3.00' HT x 6.42' LONG	1398 lb
1)	Hole - 2	0 lb
	Structure Total:	5591 lb

Structure Notes: .
1. PER ASTM C913 SPECIFICATIONS.
2. CONCRETER = 4,000 PSI AT 28" DAYS.
3. SMOOTH FORM FINISH ON THE FRONT SURFACE.
4. 3/4" CHAMFER ON ALL LONG EDGES.

.
REINFORCING PER ASTM A615 (GRADE 60).
-VERTICAL BARS = #4 BARS AT 12" C/C
-HORIZONTAL BARS = #6 BARS EQUALLY SPACED (10" MAX.)

Rim: 696' Rim to Invert: 6.75' Slack: 0" Sump: 63" Step Position:

Position	Elev	Angle	Ext. (cw)	Pipe	Pipe OD	Connector	Hole	Horz Size	Up (_)	Offset
Invert 1										
Invert 2										
Invert 3										
Invert 4										
Invert 5										
Invert 6										
Invert 7										
Invert 8										

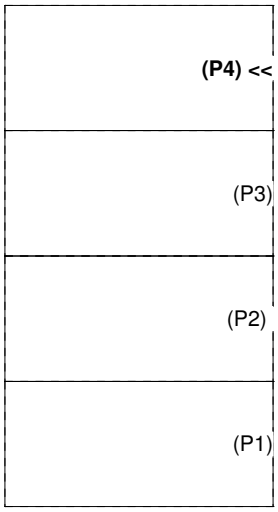

RIGHT-SIDE UP VIEW (int. dimensions)

Note:
See attached typical drawing for reinforcing and lifting details.

INSIDE WALL DIMENSIONS

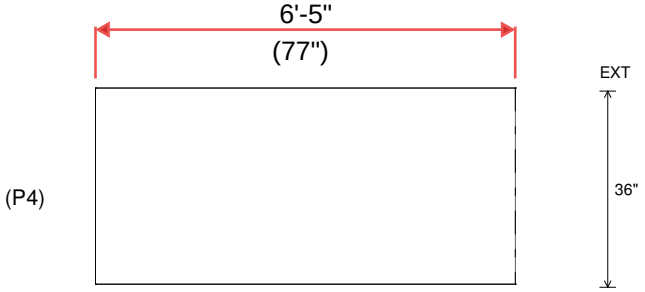

Coating (Int): Coating (Ext):	Seam Up: Flat Seam Dn: Flat	Wall Thickness: 0" Floor Height: 0"	Height (Int): 36" Height (Ext): 36"	Weight (Net): 1398 lb Volume (Net): 0.36cu.yd

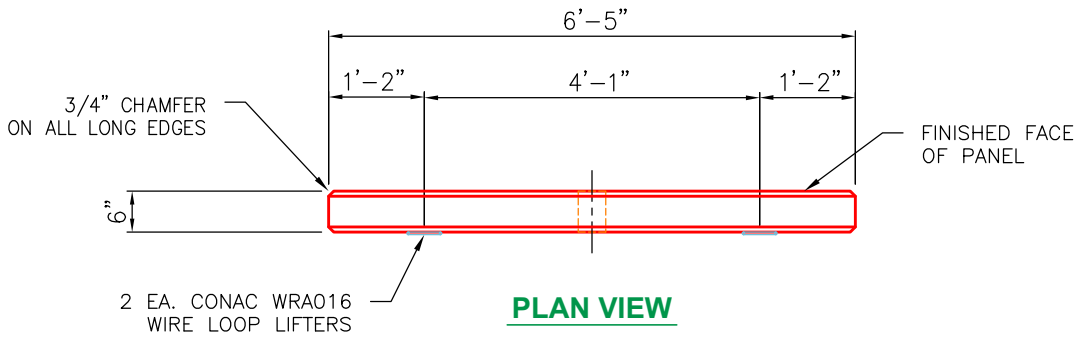

PLAN VIEW

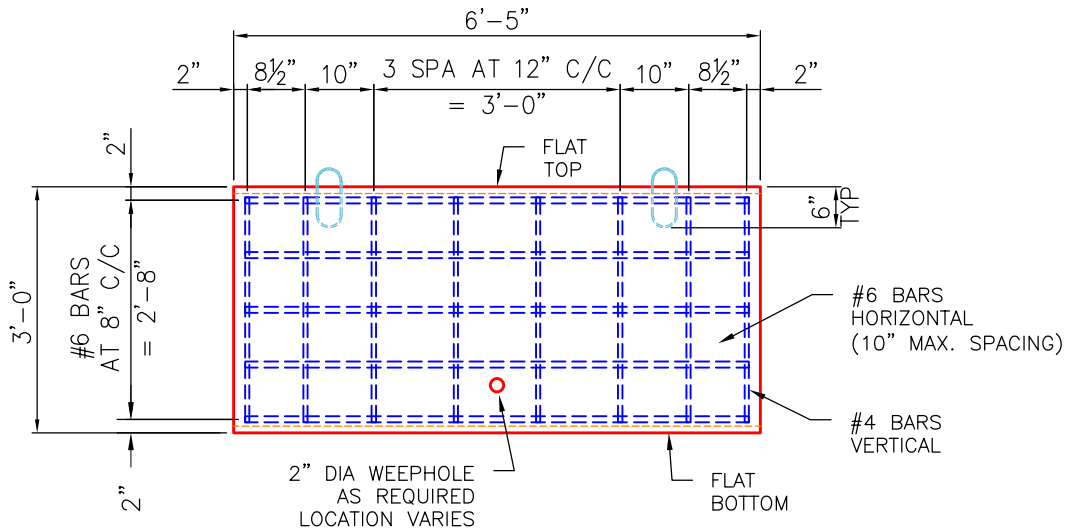

SIDE VIEW

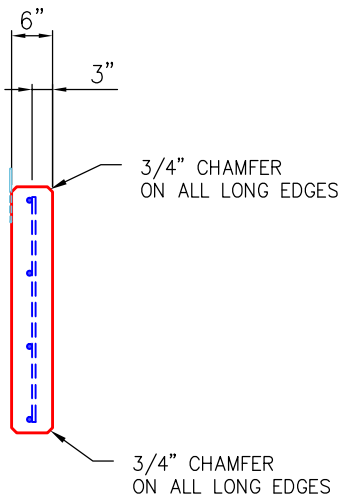

END VIEW

GENERAL NOTES:

1. MANUFACTURED ASTM C913 SPECIFICATIONS.
2. CONCRETE: 4,000 PSI MINIMUM AT 28 DAYS.
3. REINFORCING: AS PER PLAN DESIGN (GRADE 60).
4. CONAC 5CA14 ANCHORS CAST IN FOR HANDLING.
5. WEIGHT = 1,413 LBS
6. 68 REQUIRED.

REVISION INFORMATION	
REV. 0 DATE:	NO REVISIONS TO DATE

SUBMITTAL DESCRIPTION: WALL PANEL 6.50' LG x 6" THK.		
CUSTOMER: HALL CONTRACTING OF KY INC.		
PROJECT: MITCHELL HILL ROAD PROJECT		
STRUCTURE ID.: WALL PANEL 6" THK (78" LG x 36" HT)		
SALES ORDER NO: 26-1333		
CHECK: B. SMITH	DRAWN BY: J. HORSLEY	
DATE: 04/20/26	SCALE: NTS	PG. 1 of 1

THIS DRAWING IS THE PROPERTY OF INFRASTRUCTURE PRECAST, INC. ANY USE OR DUPLICATION OF THIS DRAWING WITHOUT PRIOR AUTHORIZATION IS STRICTLY PROHIBITED.

Job Name: 26-1333 - Mitchell Hill Road Project Job Location: Louisville, KY 40118 Contractor: Hall Contracting of Kentucky Inc	Plant: 100 6/16/2026 1:22:06 PM	Tech: J. Horsley PC: J. Jarvis	

Structure ID: WALL P12-P13

P1 CUSTOM WALL **WALL PANEL 6" THICK F/F**

P4) 77" x 6" - WALL PANEL 6" THICK F/F - 3.00' HT x 6.42' LONG	1398 lb
P3) 77" x 6" - WALL PANEL 6" THICK F/F - 3.00' HT x 6.42' LONG	1398 lb
P2) 77" x 6" - WALL PANEL 6" THICK F/F - 3.00' HT x 6.42' LONG	1398 lb
P1) 77" x 6" - WALL PANEL 6" THICK F/F - 3.00' HT x 6.42' LONG	1398 lb
1) Hole - 2	0 lb
Structure Total:	5591 lb

Structure Notes: .
1. PER ASTM C913 SPECIFICATIONS.
2. CONCRETER = 4,000 PSI AT 28" DAYS.
3. SMOOTH FORM FINISH ON THE FRONT SURFACE.
4. 3/4" CHAMFER ON ALL LONG EDGES.
.
REINFORCING PER ASTM A615 (GRADE 60).
-VERTICAL BARS = #4 BARS AT 12" C/C
-HORIZONTAL BARS = #6 BARS EQUALLY SPACED (10" MAX.)

Rim: 696' Rim to Invert: 7' Slack: 0" Sump: 60" Step Position:

Position	Elev	Angle	Ext. (cw)	Pipe	Pipe OD	Connector	Hole	Horz Size	Up (_)	Offset
Invert 1										
Invert 2										
Invert 3										
Invert 4										
Invert 5										
Invert 6										
Invert 7										
Invert 8										

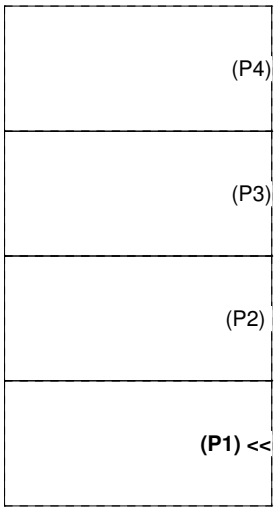

RIGHT-SIDE UP VIEW (int. dimensions)

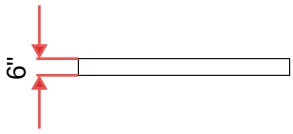

UPSIDE-DOWN VIEW (int. dimenions)

Note:
See attached typical drawing for reinforcing and lifting details.

INSIDE WALL DIMENSIONS

(P1)

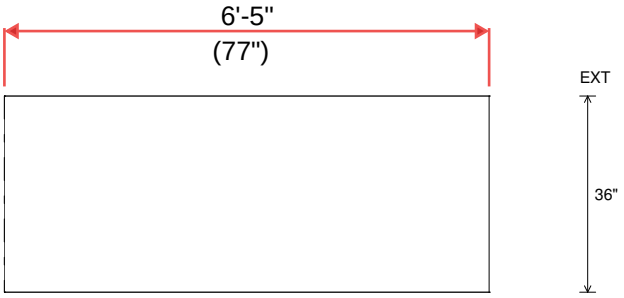

Coating (Int): Coating (Ext):	Seam Up: Flat Seam Dn: Flat	Wall Thickness: 0" Floor Height: 0"	Height (Int): 36" Height (Ext): 36"	Weight (Net): 1398 lb Volume (Net): 0.36cu.yd

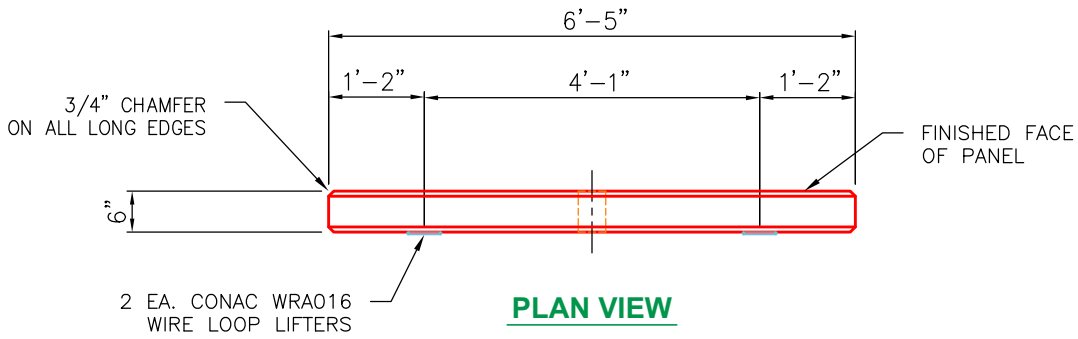

PLAN VIEW

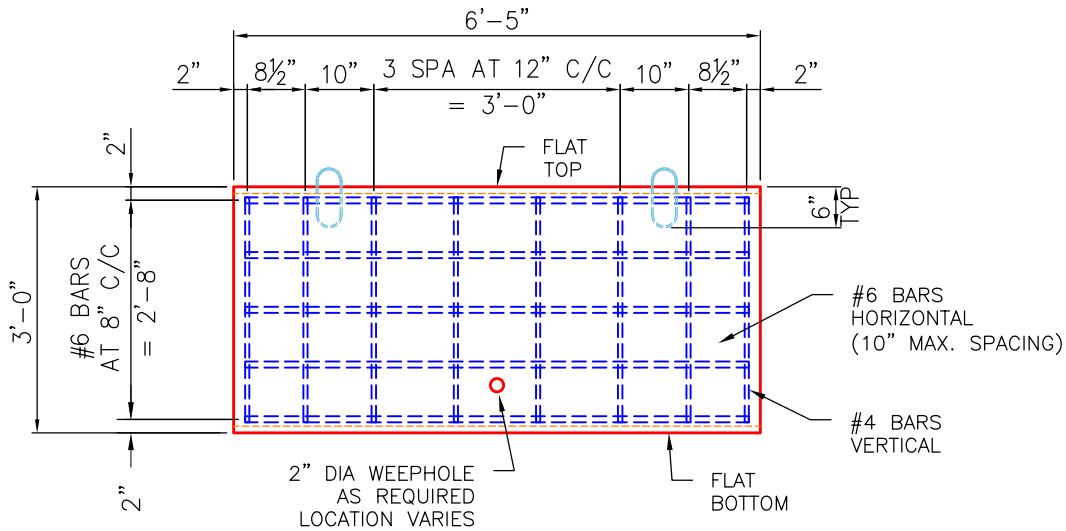

SIDE VIEW

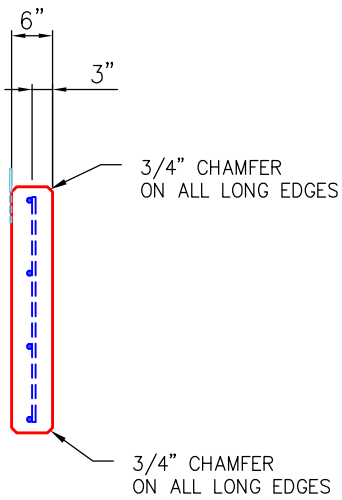

END VIEW

GENERAL NOTES:

1. MANUFACTURED ASTM C913 SPECIFICATIONS.
2. CONCRETE: 4,000 PSI MINIMUM AT 28 DAYS.
3. REINFORCING: AS PER PLAN DESIGN (GRADE 60).
4. CONAC 5CA14 ANCHORS CAST IN FOR HANDLING.
5. WEIGHT = 1,413 LBS
6. 68 REQUIRED.

REVISION INFORMATION	
REV. 0 DATE:	NO REVISIONS TO DATE

SUBMITTAL DESCRIPTION: WALL PANEL 6.50' LG x 6" THK.		
CUSTOMER: HALL CONTRACTING OF KY INC.		
PROJECT: MITCHELL HILL ROAD PROJECT		
STRUCTURE ID.: WALL PANEL 6" THK (78" LG x 36" HT)		
SALES ORDER NO: 26-1333		
CHECK: B. SMITH	DRAWN BY: J. HORSLEY	
DATE: 04/20/26	SCALE: NTS	PG. 1 of 1

THIS DRAWING IS THE PROPERTY OF INFRASTRUCTURE PRECAST, INC. ANY USE OR DUPLICATION OF THIS DRAWING WITHOUT PRIOR AUTHORIZATION IS STRICTLY PROHIBITED.

Job Name: 24-4208 - KYTC Christian Co. Call 100 (ID 241018) Job Location: Hopkinsville, KY Contractor: Scotty's Contracting & Stone, LLC	Plant: Beaver Dam 7/30/2026 8:57:17 AM	Tech: J. Horsley PC: C. Goff	

Structure ID: 231 (423+15 RT)

P2 BX024060-08LD08-1559 BX FLAT LID 8inW, w/15"x59" HOLE (KYTC DBI-13S) F/F

P4) 15" x 59" - P.I.P. - BY OTHERS - 8"	0 lb
P3) 15" x 59" - FIELD ADJUSTMENT - 3"	0 lb
P2) 24" x 60" - BX FLAT LID 8inW, w/15"x59" HOLE (KYTC DBI-13S) F/F - 8"	1461 lb
P1) 24" x 60" - BOX BASE 8inW, 8inF, Variable Ht F/n - 36"	6646 lb
1) CASTING - HOE KY-230-G F/G (GRADE)	237 lb
1) 24" x 60" - Conseal CS-102 1.00"	0 lb
1) Hole - 20	0 lb
2) Hole - 4	0 lb
Structure Total:	8344 lb

Structure Notes: .
KYTC STATE PROJECT
1. KYTC DBI TYPE 13S / ASTM C-913 SPEC'S.
2. CONCRETE = 4,000 PSI AT 28 DAYS.
3. CASTING BY ICAST (HOE KY-230S F/G).
4. STUB #5 BARS 4" OUT TOP OF TOP SLAB (SPA AT 12" C/C) AROUND 15"x59" HOLE.

.
REINFORCING PER ASTM A615 (GRADE 60).
- TOP SLAB (As .62) #5 BARS AT 6" C.C.E.W. (DBL MAT).
- WALLS (As .31) #5 BARS AT 12" C.C.E.W..
- FLOOR (As .31) #5 BARS AT 12" C.C.E.W.

NOTES:
1. MANUFACTURED TO KYTC DBI TYPE 13S/ASTM C-931 (LATEST REVISION).
2. CONCRETE: 4,000 PSI AT 28 DAYS.
3. REINFORCING: DOUBLE MAT #5 BAR @ 6" C.C. E.W. (GRADE 60).
4. STUB #5 BARS 4" OUT TOP SLAB AROUND OPENING @ 12" C/C.

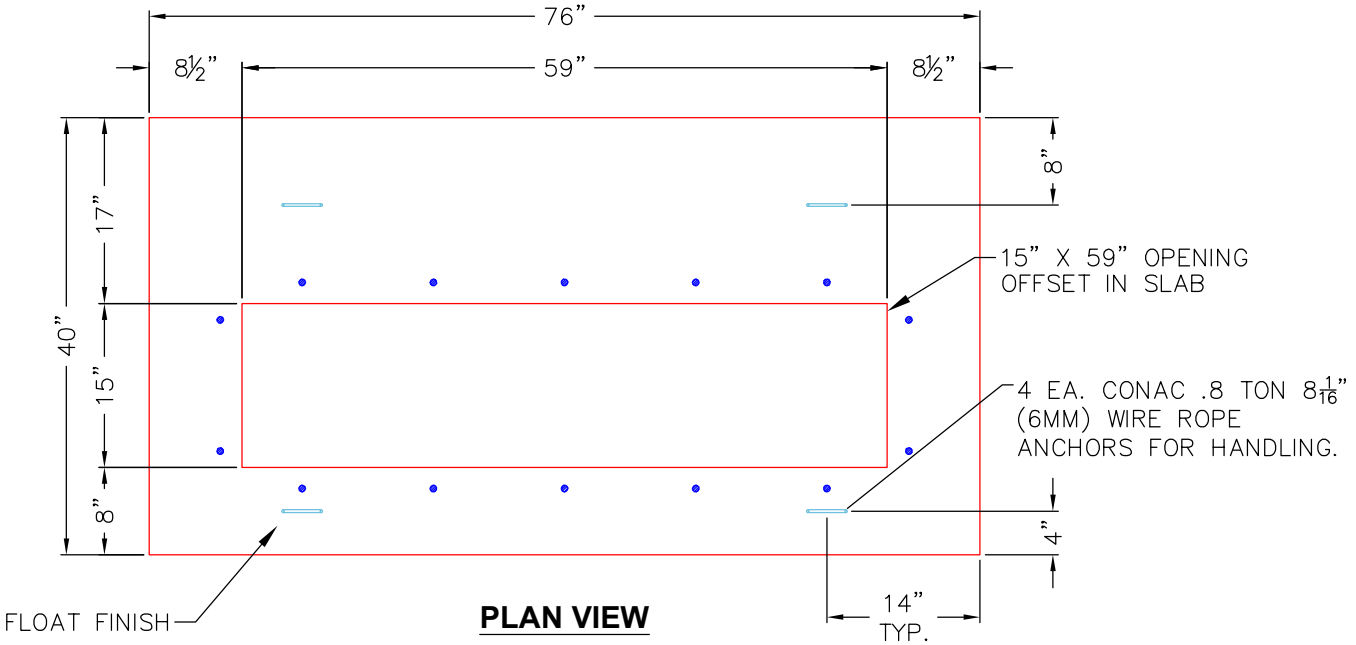

PLAN VIEW

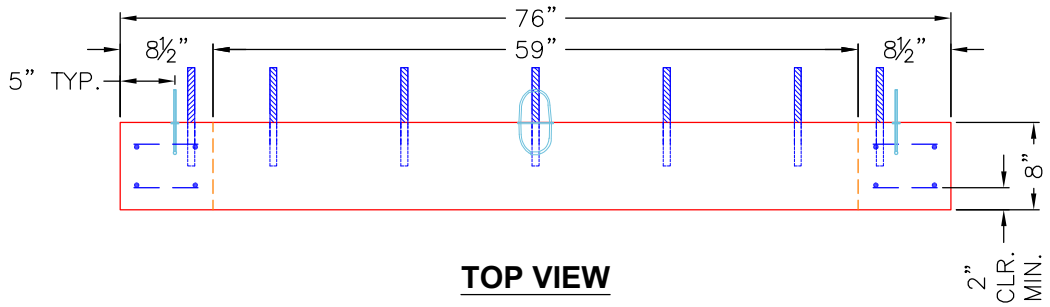

TOP VIEW

Coating (Int): Coating (Ext):	Seam Up: Flat Seam Dn: Flat	Wall Thickness: 8"	Height (Ext): 8"	Weight (Net): 1461 lb Volume (Net): 0.37cu.yd