Job Name: 26-2090 - Monroe Co Area Tech Center Renovation Job Location: Tompkinsville, KY Contractor: Lindsey's Dirt Works LLC	Plant: 100 7/20/2026 6:19:36 PM	Tech: Jared - F PC: M. Sullivan	

Structure ID: 1 ST-MH

P1 MH048BA60 MH BASE T/n

P3) 24" - CASTING HEIGHT - 7"	0 lb
P2) 48" - MH FLAT TOP w/ 24" ECC Hole F/G - 12"	1561 lb
P1) 48" - MH BASE T/n - 60"	5376 lb
1) CASTING - HOE MC-375 F/C Storm	271 lb
1) 48" - Conseal CS-102 1.00"	0 lb
1) 24" - Conseal CS-102 1.00"	0 lb
1) Hole - 16	0 lb
1) Hole - 12	0 lb
1) Hole - 6	0 lb
5) MH Step ML-10-TDS-NCR - 10"	0 lb
Structure Total:	7208 lb

Structure Notes: .
1. PER ASTM C478 SPECIFICATIONS.
2. CONCRETE = 4,000 PSI AT 28 DAYS.
3. NO INVERT CHANNEL.
4. CASTING BY ICAST (HOE MC-375 F/C STORM).

.
REINFORCING PER ASTM A615 (GRADE 60).
- TOP SLAB (As .62) #5 BARS AT 6" C.C.E.W.
- RISER/WALLS (As .12)
- FLOOR (As .31) #5 BARS AT 12" C.C.E.W.

Rim: 863.04' Rim to Invert: 6.72' Slack: 1.64" Sump: 0" Step Position: 180°

Position	Elev	Angle	Ext. (cw)	Pipe	Pipe OD	Connector	Hole	Horz Size	Up (_)	Offset
Invert 1	856.32'	0°	0"	12" HP-PP	14.5"	Hole 16	16"	16.312"	-1.25"	0"
Invert 2	859.91'	90°	45.5"	8" HDPE	9.1"	Hole 12	12"	12.129"	42.5"	0"
Invert 3	860.45'	270°	136.625"	4" HDPE	4.8"	Hole 6	6"	6.016"	49.125"	0"
Invert 4										
Invert 5										
Invert 6										
Invert 7										
Invert 8										

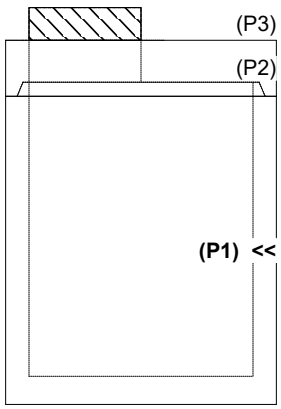

RIGHT-SIDE UP VIEW (int. dimensions)

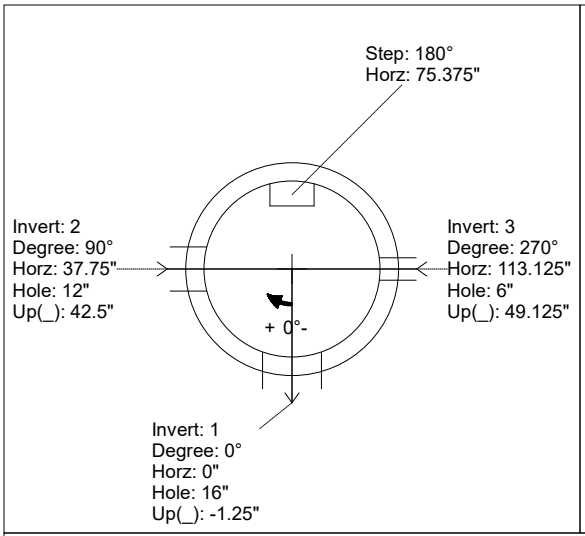

UPSIDE-DOWN VIEW (int. dimenions)

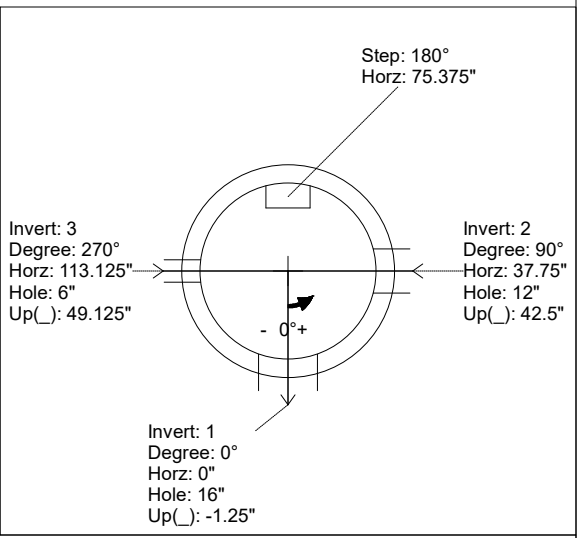

INSIDE WALL DIMENSIONS

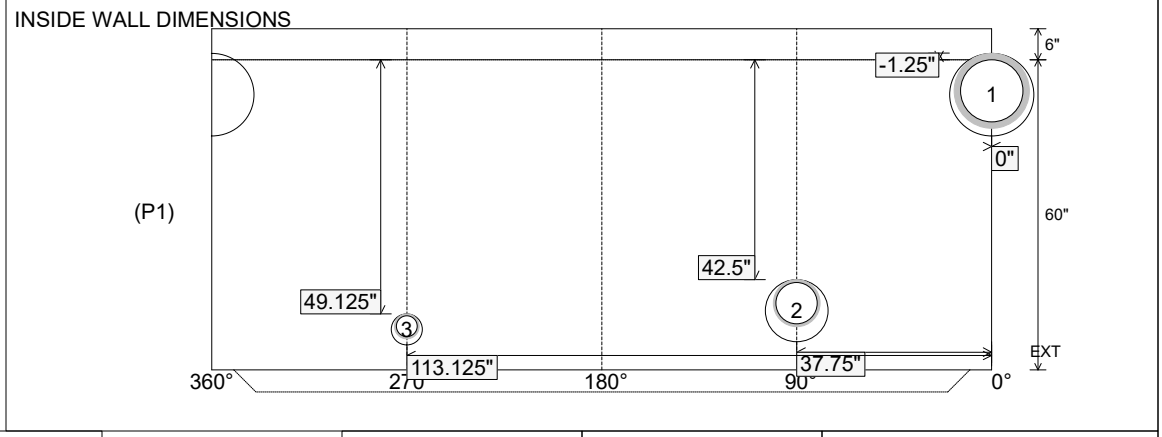

Coating (Int): Coating (Ext):	Seam Up: Tongue Seam Dn: n/a	Wall Thickness: 5" Floor Height: 6"	Height (Int): 60" Height (Ext): 66"	Weight (Net): 5376 lb Volume (Net): 1.37cu.yd