Job Name: 26-2485 855358 Fuqua Development Job Location: Nicholasville, KY Contractor: Contech Engineering Solutions	Plant: Beaver Dam 6/5/2026 8:56:50 AM	Tech: S. Felletter PC: C. Goff	

Structure ID: 15-CS-12

P5 MH144LD18SP **MH FLAT TOP SPEC. (2 - 24"ø HOLES) F/G**

P6) 24" - CASTING HEIGHT - 4"	0 lb
P5) 144" - MH FLAT TOP SPEC. (2 - 24"ø HOLES) F/G - 18"	23623 lb
P4) 144" - MH RISER T/G - 36"	19370 lb
P3) 144" - MH RISER T/G - 78"	37954 lb
P2) 144" - MH RISER T/G - 54"	29054 lb
P1) 144" - MH MONOBASE 14F, Custom Ht T/n - 24"	39578 lb
1) ASSEMBLY REQUIRED - BRACKETS ONLY	0 lb
1) CVSTENCILING	0 lb
4) 144" - Conseal CS-102 1.00"	0 lb
1) 24" - Conseal CS-102 1.00"	0 lb
2) Hole - 48	0 lb
Structure Total:	149579 lb

Structure Notes: .
1. PER ASTM C478 SPECIFICATIONS.
2. CONCRETE = 4,000 PSI AT 28 DAYS.
3. 4" CASTING BY OTHERS
4. LIFTING ANCHORS TO BE INSTALLED ON THE OUTSIDE OF THE STRUCTURE
5. ICAST TO INSTALL BRACKETS ONLY
6. CONTECH'S LOGO AS WELL AS THE INLET AND OUTLET MUST BE STENCILED ONTO THE STRUCTURE

.
REINFORCING PER ASTM A615 (GRADE 60).
- TOP SLAB (As .62) #5 BARS AT 6" C.C.E.W.
- RISER/WALLS (As .36)
- FLOOR (As .47) #5 BARS AT 8" C.C.E.W.

GENERAL NOTES:
1. MANUFACTURED TO ASTM C-478 (LATEST REVISION).
2. CONCRETE 5,000 PSI AT 28 DAYS.
3. REINFORCING: #4 & #6 BAR AS SHOWN (GRADE 60).
4. WEIGHT: 23,626 LBS.

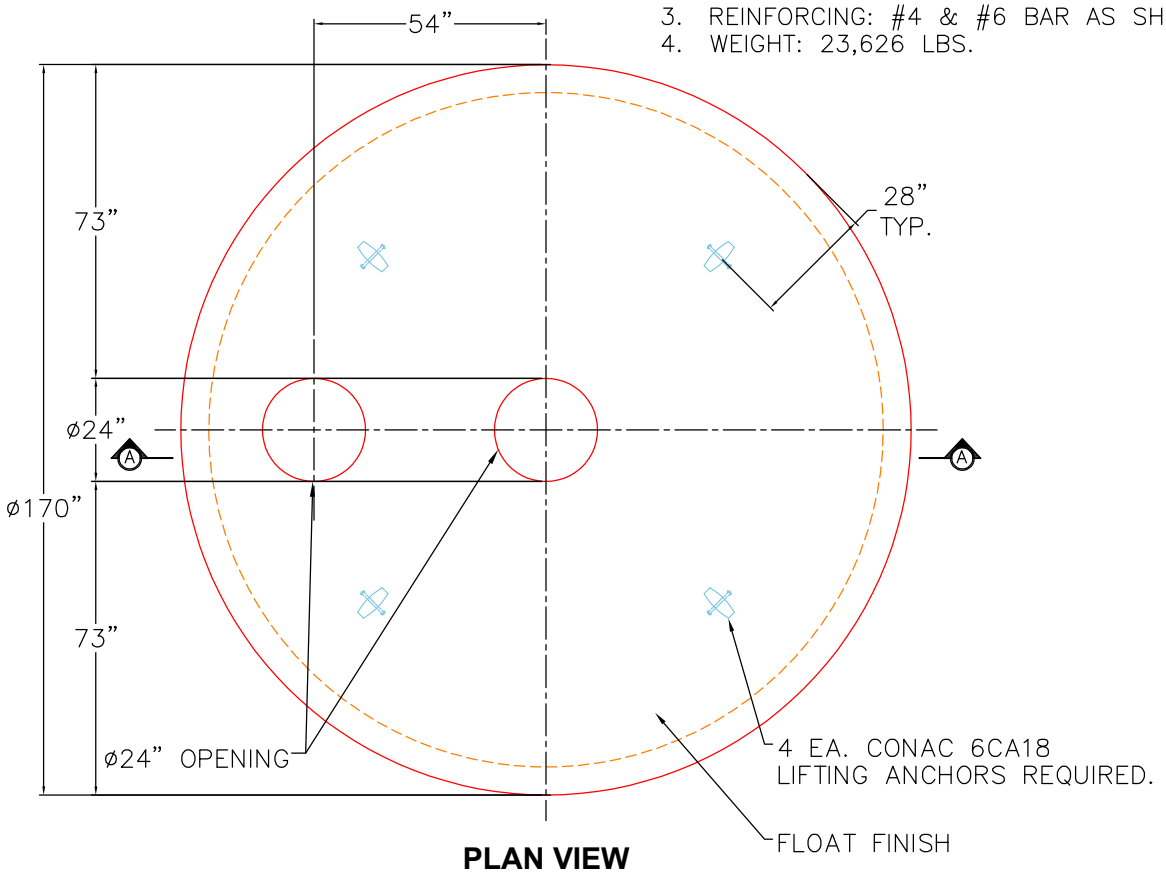

PLAN VIEW

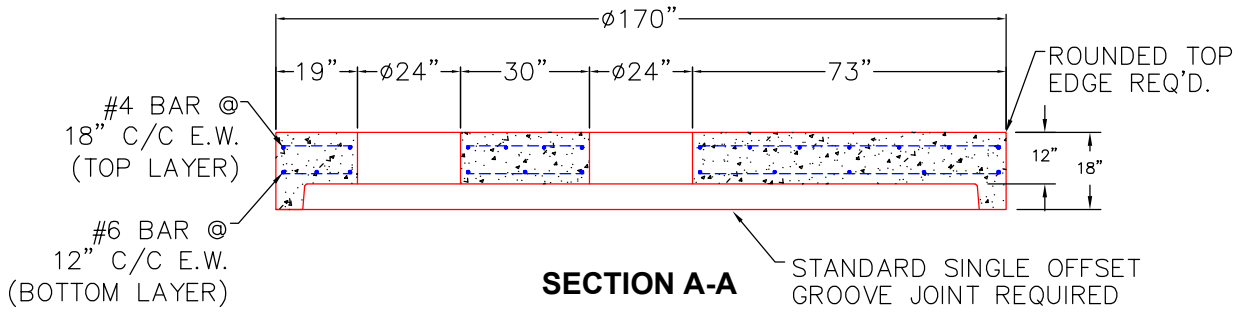

SECTION A-A

Coating (Int): Coating (Ext):	Seam Up: Flat Seam Dn: Groove	Wall Thickness: 13"	Height (Ext): 18"	Weight (Net): 23623 lb Volume (Net): 6.03cu.yd

Job Name: 25-1401 Irwin Landing Ph. 1 Job Location: Murfreesboro, TN Contractor: Bear Construction LLC	Plant: Beaver Dam 6/9/2026 10:46:23 AM	Tech: S. Felletter PC: Erica Bradley	

Structure ID: R16

P2 MH048RS48 MH RISER T/G

P4) 28" x 28" - CASTING HEIGHT - 5"	0 lb
P3) 48" - MH FLAT TOP w/28"x28" Hole F/G - 12"	1368 lb
P2) 48" - MH RISER T/G - 48"	3120 lb
P1) 48" - MH BASE T/n - 42"	3798 lb
1) 48" - STORM INVERT CHANNEL - 1/4 HEIGHT	1075 lb
1) CASTING - JBS 3104-V SINGLE SET	250 lb
2) 48" - Conseal CS-102 1.00"	0 lb
1) 28" x 28" - Conseal CS-102 1.00"	0 lb
3) Hole - 26	0 lb
7) MH Step ML-10-TDS-NCR - 10"	0 lb
Structure Total:	9611 lb

Structure Notes: .
1. PER ASTM C478 SPECIFICATIONS.
2. CONCRETE = 4,000 PSI AT 28 DAYS.
3. CASTING BY ICAST (JBS-3104 SINGLE SET).
.
REINFORCING PER ASTM A615 (GRADE 60).
- TOP SLAB (As .62) #5 BARS AT 6" C.C.E.W..
- RISER/WALLS (As .12)
- FLOOR (As .31) #5 BARS AT 12" C.C.E.W.

Rim: 579.25' Rim to Invert: 8.88' Slack: 2.06" Sump: 2.5" Step Position: 270°

Position	Elev	Angle	Ext. (cw)	Pipe	Pipe OD	Connector	Hole	Horz Size	Up (_)	Offset
Invert 1										
Invert 2	575.22'	90°	45.553"	18" RCP B WALL	23"	Hole 26	26"	27.476"	11.95"	0"
Invert 3										
Invert 4										
Invert 5										
Invert 6										
Invert 7										
Invert 8										

RIGHT-SIDE UP VIEW (int. dimensions)

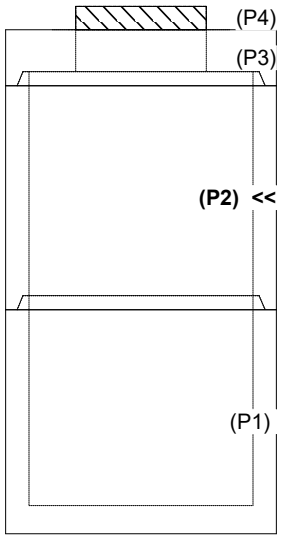

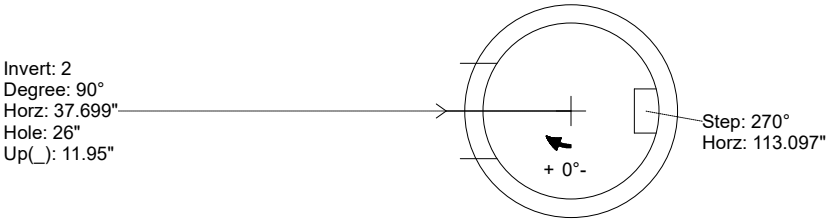

INSIDE WALL DIMENSIONS

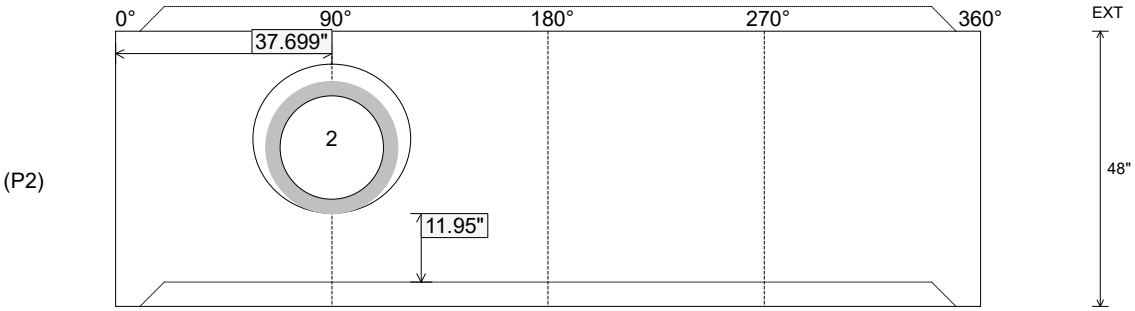

Coating (Int): Coating (Ext):	Seam Up: Tongue Seam Dn: Groove	Wall Thickness: 5" Floor Height: 0"	Height (Int): 48" Height (Ext): 48"	Weight (Net): 3120 lb Volume (Net): 0.8cu.yd

Job Name: 25-1401 Irwin Landing Ph. 1 Job Location: Murfreesboro, TN Contractor: Bear Construction LLC	Plant: Beaver Dam 6/9/2026 10:46:21 AM	Tech: S. Felletter PC: Erica Bradley	

Structure ID: R6

P2 MH048RS36 MH RISER T/G

P4) 28" x 28" - CASTING HEIGHT - 5"	0 lb
P3) 48" - MH FLAT TOP w/28"x28" Hole F/G - 12"	1368 lb
P2) 48" - MH RISER T/G - 36"	2515 lb
P1) 48" - MH BASE T/n - 48"	4217 lb
1) 48" - STORM INVERT CHANNEL - 1/4 HEIGHT	1075 lb
1) CASTING - JBS 3104-V SINGLE SET	250 lb
2) 48" - Conseal CS-102 1.00"	0 lb
1) 28" x 28" - Conseal CS-102 1.00"	0 lb
2) Hole - 26	0 lb
7) MH Step ML-10-TDS-NCR - 10"	0 lb
Structure Total:	9425 lb

Structure Notes: .
1. PER ASTM C478 SPECIFICATIONS.
2. CONCRETE = 4,000 PSI AT 28 DAYS.
3. CASTING BY ICAST (JBS-3104 SINGLE SET).
.
REINFORCING PER ASTM A615 (GRADE 60).
- TOP SLAB (As .62) #5 BARS AT 6" C.C.E.W..
- RISER/WALLS (As .12)
- FLOOR (As .31) #5 BARS AT 12" C.C.E.W.

Rim: 569.02' Rim to Invert: 8.45' Slack: 2.9" Sump: 2.5" Step Position: 90

Position	Elev	Angle	Ext. (cw)	Pipe	Pipe OD	Connector	Hole	Horz Size	Up (_)	Offset
Invert 1										
Invert 2										
Invert 3										
Invert 4										
Invert 5										
Invert 6										
Invert 7										
Invert 8										

RIGHT-SIDE UP VIEW (int. dimensions)

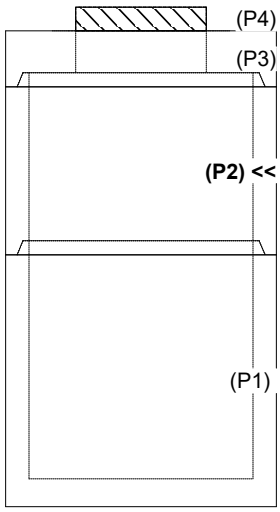

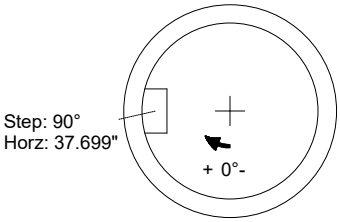

INSIDE WALL DIMENSIONS

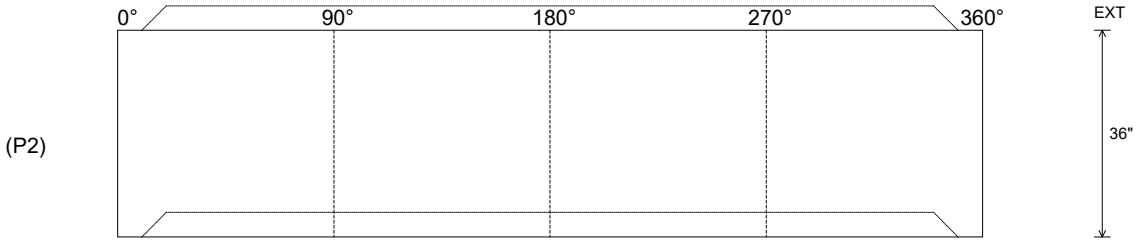

Coating (Int): Coating (Ext):	Seam Up: Tongue Seam Dn: Groove	Wall Thickness: 5" Floor Height: 0"	Height (Int): 36" Height (Ext): 36"	Weight (Net): 2515 lb Volume (Net): 0.64cu.yd

Job Name: 26-2080 - The Cumberland Job Location: Bowling Green, KY Contractor: J & J Concrete & Excavating, LLC	Plant: 100 6/22/2026 6:26:02 PM	Tech: Jared - A PC: E. Bradley	

Structure ID: C4 ST-CI

P2 MH048LD12-24X36RECT MH FLAT TOP w/24"x36" Hole F/G

P3) 24" x 36" - CASTING HEIGHT - 6"	0 lb
P2) 48" - MH FLAT TOP w/24"x36" Hole F/G - 12"	1300 lb
P1) 48" - MH BASE T/n - 42"	3632 lb
1) CASTING - HOE 525 SET (F/G/H)	442 lb
1) 48" - Conseal CS-102 1.00"	0 lb
1) 24" x 36" - Conseal CS-102 1.00"	0 lb
2) Hole - 30	0 lb
3) MH Step ML-10-TDS-NCR - 10"	0 lb

Structure Total:	5374 lb

Structure Notes:

1. PER ASTM C-478 SPECIFICATIONS
2. CONCRETE: 4,000 PSI AT 28 DAYS
3. REINFORCEMENT: #4 BAR @ 10" C.C. E.W. (GRADE 60) - 2" MIN. REBAR CLEARANCE (TYP)
4. HOE 525 FRAME, FLAT GRATE, & CURB HOOD SUPPLIED BY ICAST
5. LIFTERS: 4 EA. WRA016 CONAC WIRE ROPE ANCHORS FOR PLANT & FIELD HANDLING
6. TOP SURFACE TO RECEIVE FLOATED FINISH

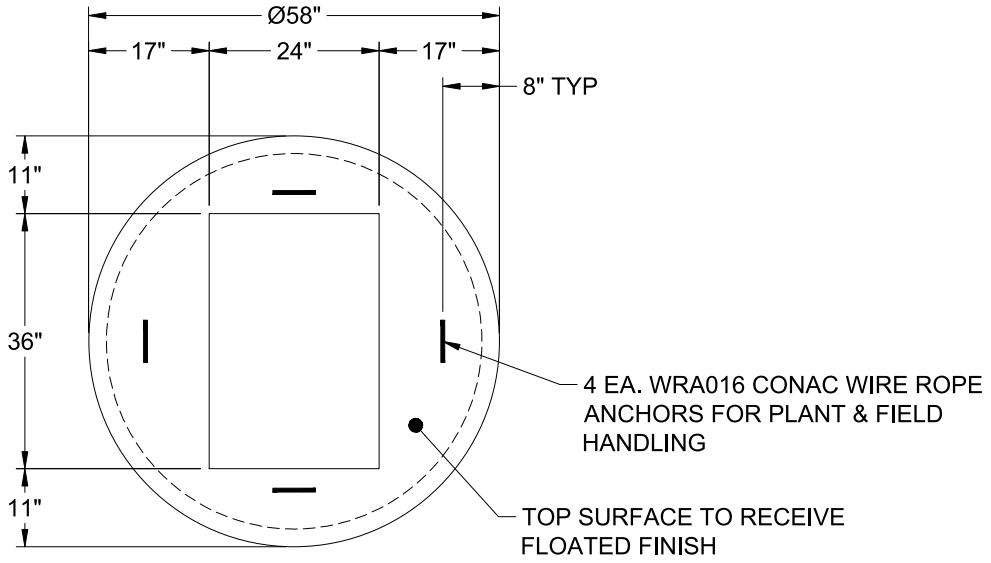

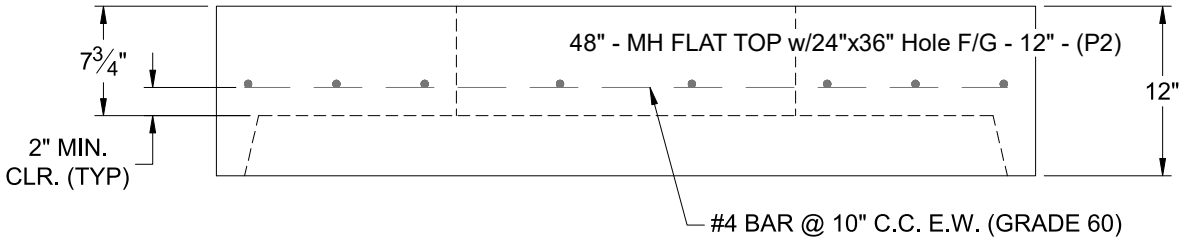

Coating (Int): Coating (Ext):	Seam Up: Flat Seam Dn: Groove	Wall Thickness: 5"	Height (Ext): 12"	Weight (Net): 1300 lb Volume (Net): 0.46cu.yd

Job Name: 26-2080 - The Cumberland Job Location: Bowling Green, KY Contractor: J & J Concrete & Excavating, LLC	Plant: 100 6/22/2026 6:26:01 PM	Tech: Jared - A PC: E. Bradley	

Structure ID: C3 ST-CI

P2 MH048LD12-24X36RECT MH FLAT TOP w/24"x36" Hole F/G

P3) 24" x 36" - CASTING HEIGHT - 6"	0 lb
P2) 48" - MH FLAT TOP w/24"x36" Hole F/G - 12"	1300 lb
P1) 48" - MH BASE T/n - 36"	3213 lb
1) CASTING - HOE 525 SET (F/G/H)	442 lb
1) 48" - Conseal CS-102 1.00"	0 lb
1) 24" x 36" - Conseal CS-102 1.00"	0 lb
2) Hole - 30	0 lb
3) MH Step ML-10-TDS-NCR - 10"	0 lb
Structure Total:	4955 lb

Structure Notes:

1. PER ASTM C-478 SPECIFICATIONS
2. CONCRETE: 4,000 PSI AT 28 DAYS
3. REINFORCEMENT: #4 BAR @ 10" C.C. E.W. (GRADE 60) - 2" MIN. REBAR CLEARANCE (TYP)
4. HOE 525 FRAME, FLAT GRATE, & CURB HOOD SUPPLIED BY ICAST
5. LIFTERS: 4 EA. WRA016 CONAC WIRE ROPE ANCHORS FOR PLANT & FIELD HANDLING
6. TOP SURFACE TO RECEIVE FLOATED FINISH

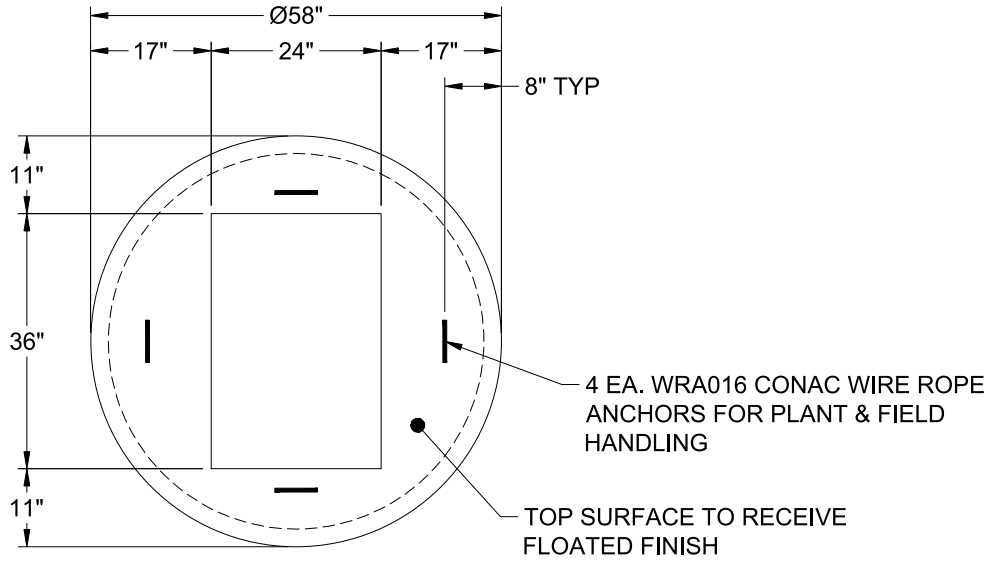

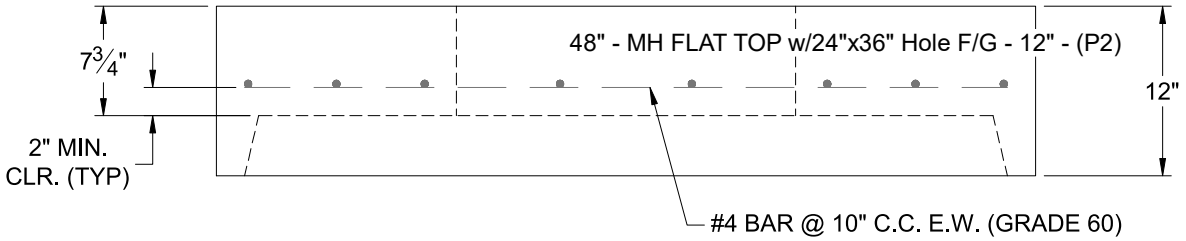

Coating (Int): Coating (Ext):	Seam Up: Flat Seam Dn: Groove	Wall Thickness: 5"	Height (Ext): 12"	Weight (Net): 1300 lb Volume (Net): 0.46cu.yd

Job Name: 26-2080 - The Cumberland Job Location: Bowling Green, KY Contractor: J & J Concrete & Excavating, LLC	Plant: 100 6/22/2026 6:26:01 PM	Tech: Jared - A PC: E. Bradley	

Structure ID: C2 ST-CI

P2 MH048LD12-24X36RECT MH FLAT TOP w/24"x36" Hole F/G

P3) 24" x 36" - CASTING HEIGHT - 6"	0 lb
P2) 48" - MH FLAT TOP w/24"x36" Hole F/G - 12"	1300 lb
P1) 48" - MH BASE Custom Ht T/n - 40"	3493 lb
1) CASTING - HOE 525 SET (F/G/H)	442 lb
1) 48" - Conseal CS-102 1.00"	0 lb
1) 24" x 36" - Conseal CS-102 1.00"	0 lb
2) Hole - 30	0 lb
3) MH Step ML-10-TDS-NCR - 10"	0 lb

Structure Total:	5235 lb

Structure Notes:

1. PER ASTM C-478 SPECIFICATIONS
2. CONCRETE: 4,000 PSI AT 28 DAYS
3. REINFORCEMENT: #4 BAR @ 10" C.C. E.W. (GRADE 60) - 2" MIN. REBAR CLEARANCE (TYP)
4. HOE 525 FRAME, FLAT GRATE, & CURB HOOD SUPPLIED BY ICAST
5. LIFTERS: 4 EA. WRA016 CONAC WIRE ROPE ANCHORS FOR PLANT & FIELD HANDLING
6. TOP SURFACE TO RECEIVE FLOATED FINISH

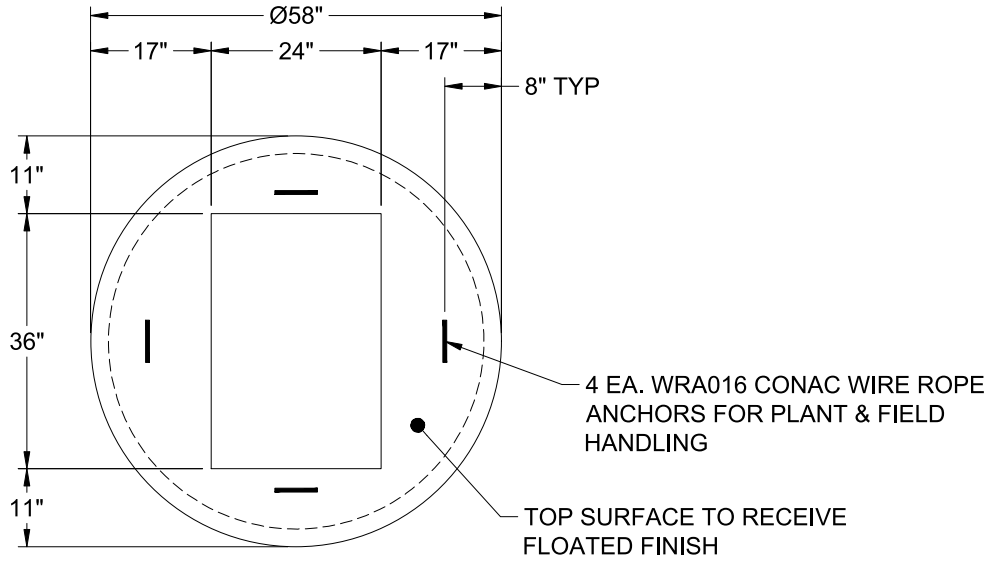

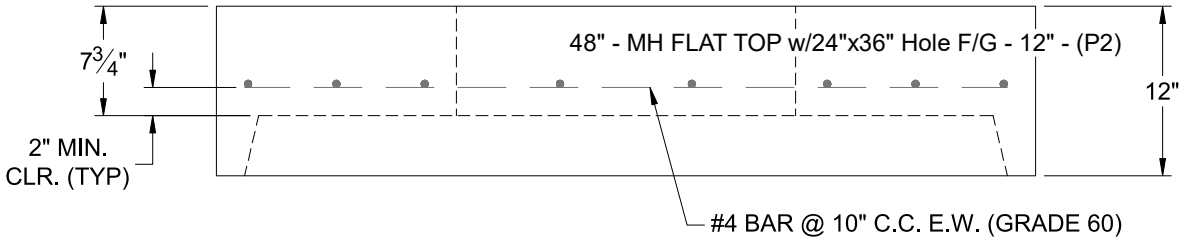

Coating (Int): Coating (Ext):	Seam Up: Flat Seam Dn: Groove	Wall Thickness: 5"	Height (Ext): 12"	Weight (Net): 1300 lb Volume (Net): 0.46cu.yd

Job Name: 26-2080 - The Cumberland Job Location: Bowling Green, KY Contractor: J & J Concrete & Excavating, LLC	Plant: 100 6/22/2026 6:26:00 PM	Tech: Jared - A PC: E. Bradley	

Structure ID: B3 ST-CI

P2 MH048LD12-24X36RECT MH FLAT TOP w/24"x36" Hole F/G

P3) 24" x 36" - CASTING HEIGHT - 6"	0 lb
P2) 48" - MH FLAT TOP w/24"x36" Hole F/G - 12"	1300 lb
P1) 48" - MH BASE T/n - 36"	3710 lb
1) CASTING - HOE 525 SET (F/G/H)	442 lb
1) 48" - Conseal CS-102 1.00"	0 lb
1) 24" x 36" - Conseal CS-102 1.00"	0 lb
1) Hole - 20	0 lb
3) MH Step ML-10-TDS-NCR - 10"	0 lb

Structure Total:	5452 lb

Structure Notes:

1. PER ASTM C-478 SPECIFICATIONS
2. CONCRETE: 4,000 PSI AT 28 DAYS
3. REINFORCEMENT: #4 BAR @ 10" C.C. E.W. (GRADE 60) - 2" MIN. REBAR CLEARANCE (TYP)
4. HOE 525 FRAME, FLAT GRATE, & CURB HOOD SUPPLIED BY ICAST
5. LIFTERS: 4 EA. WRA016 CONAC WIRE ROPE ANCHORS FOR PLANT & FIELD HANDLING
6. TOP SURFACE TO RECEIVE FLOATED FINISH

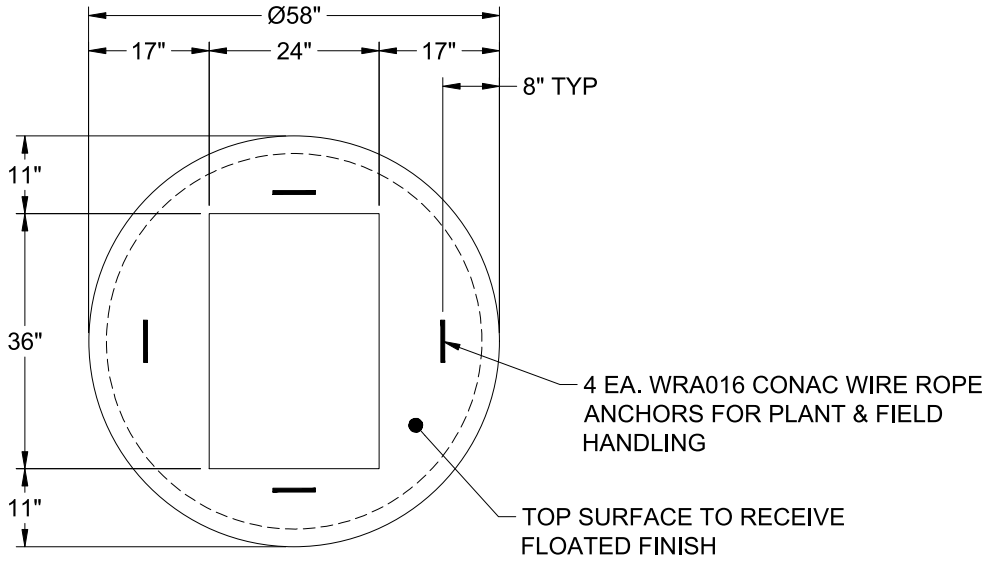

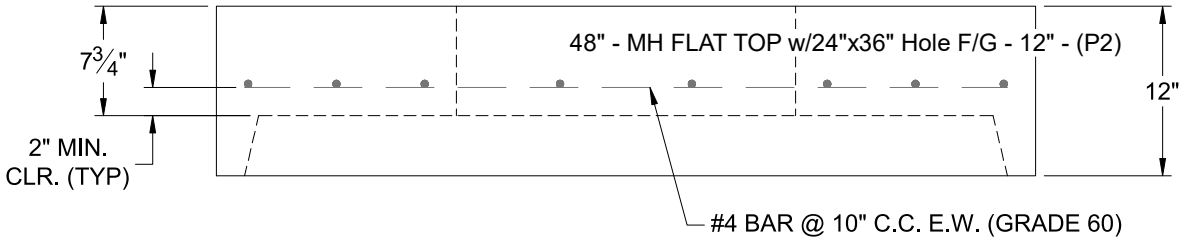

Coating (Int): Coating (Ext):	Seam Up: Flat Seam Dn: Groove	Wall Thickness: 5"	Height (Ext): 12"	Weight (Net): 1300 lb Volume (Net): 0.46cu.yd

Job Name: 26-2080 - The Cumberland Job Location: Bowling Green, KY Contractor: J & J Concrete & Excavating, LLC	Plant: 100 6/22/2026 6:26:00 PM	Tech: Jared - A PC: E. Bradley	

Structure ID: B2 ST-CI

P2 MH048LD12-24X36RECT MH FLAT TOP w/24"x36" Hole F/G

P4) 24" x 36" - CASTING HEIGHT - 6"	0 lb
P3) 24" x 36" - GRADE RING F/F - 3"	306 lb
P2) 48" - MH FLAT TOP w/24"x36" Hole F/G - 12"	1300 lb
P1) 48" - MH BASE T/n - 36"	3575 lb
1) CASTING - HOE 525 SET (F/G/H)	442 lb
1) 48" - Conseal CS-102 1.00"	0 lb
2) 24" x 36" - Conseal CS-102 1.00"	0 lb
2) Hole - 20	0 lb
3) MH Step ML-10-TDS-NCR - 10"	0 lb
Structure Total:	5623 lb

Structure Notes:

1. PER ASTM C-478 SPECIFICATIONS
2. CONCRETE: 4,000 PSI AT 28 DAYS
3. REINFORCEMENT: #4 BAR @ 10" C.C. E.W. (GRADE 60) - 2" MIN. REBAR CLEARANCE (TYP)
4. HOE 525 FRAME, FLAT GRATE, & CURB HOOD SUPPLIED BY ICAST
5. LIFTERS: 4 EA. WRA016 CONAC WIRE ROPE ANCHORS FOR PLANT & FIELD HANDLING
6. TOP SURFACE TO RECEIVE FLOATED FINISH

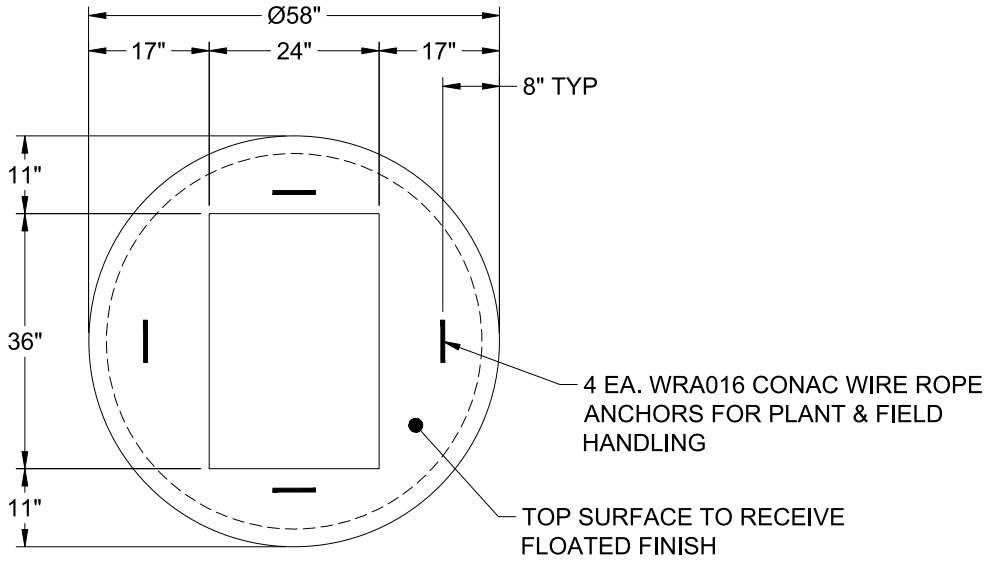

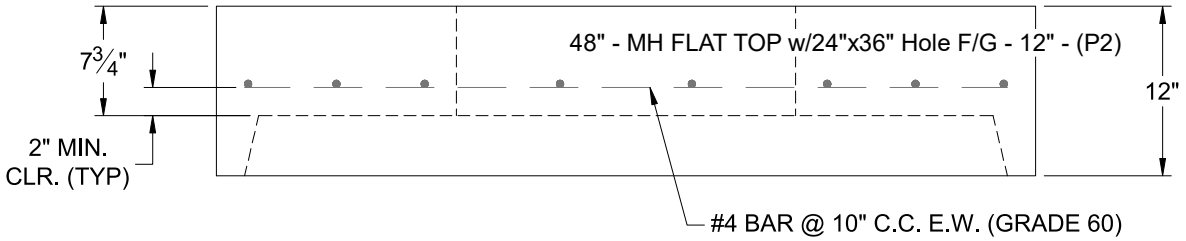

Coating (Int): Coating (Ext):	Seam Up: Flat Seam Dn: Groove	Wall Thickness: 5"	Height (Ext): 12"	Weight (Net): 1300 lb Volume (Net): 0.46cu.yd

Job Name: 26-2424 Fifth Third Mt. Juliet Central Job Location: Mount Juliet, TN 37122 Contractor: Hayes Pipe Supply	Plant: 100 6/30/2026 11:38:20 AM	Tech: Jared - A PC: Erica Bradley	

Structure ID: ST-14 ST-MH

P1 MH048BA36 MH BASE

P3) 24" - CASTING HEIGHT - 7"	0 lb
P2) 48" - MH FLAT TOP w/ 24" ECC Hole - 12"	1561 lb
P1) 48" - MH BASE - 36"	3078 lb
1) 48" - Conseal CS-102 1.00"	0 lb
1) 24" - Conseal CS-102 1.00"	0 lb
2) Hole - 30	0 lb
1) Hole - 20	0 lb
3) MH Step ML-10-TDS-NCR - 10"	0 lb

Structure Total:	4639 lb

Structure Notes: .
1. HOE MC-375 F/C STORM PROVIDED BY OTHERS
2. PER ASTM C478 SPECIFICATIONS.
3. CONCRETE = 4,000 PSI AT 28 DAYS.
4. REINFORCING PER ASTM A615 (GRADE 60).
- TOP SLAB (As .62) #5 BARS AT 6" C.C.E.W..
- RISER/WALLS (As .12)
- FLOOR (As .31) #5 BARS AT 12" C.C.E.W.

Rim: 540.25' Rim to Invert: 4.65' Slack: 2.7" Sump: 1.9" Step Position: 163.5°

Position	Elev	Angle	Ext. (cw)	Pipe	Pipe OD	Connector	Hole	Horz Size	Up (_)	Offset
Invert 1	535.6'	0°	0"	24" HDPE	27.8"	Hole 30	30"	32.406"	0"	0"
Invert 2	535.6'	90°	45.553"	24" HDPE	27.8"	Hole 30	30"	32.406"	0"	0"
Invert 3	536.6'	237°	119.956"	15" HDPE	17.6"	Hole 20	20"	20.629"	12.6"	0"
Invert 4										
Invert 5										
Invert 6										
Invert 7										
Invert 8										

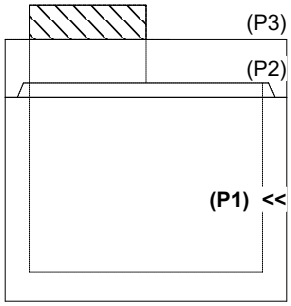

RIGHT-SIDE UP VIEW (int. dimensions)

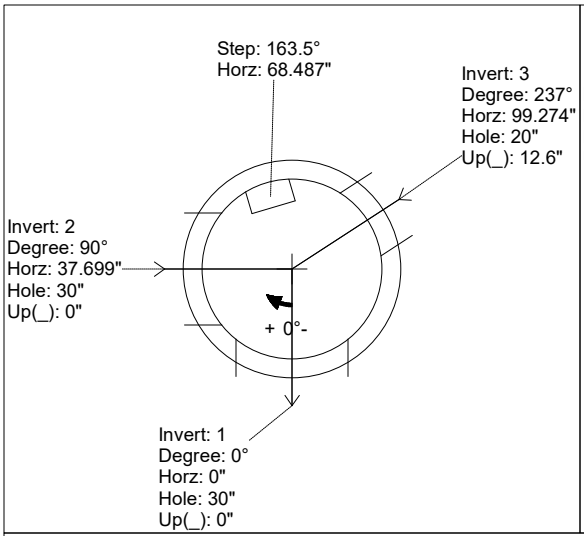

UPSIDE-DOWN VIEW (int. dimenions)

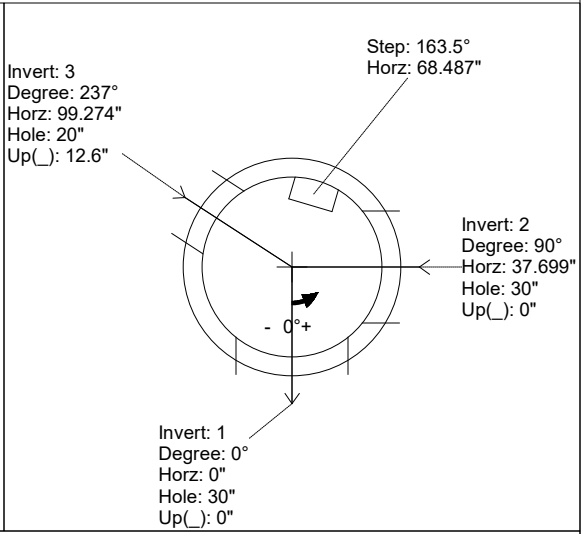

INSIDE WALL DIMENSIONS

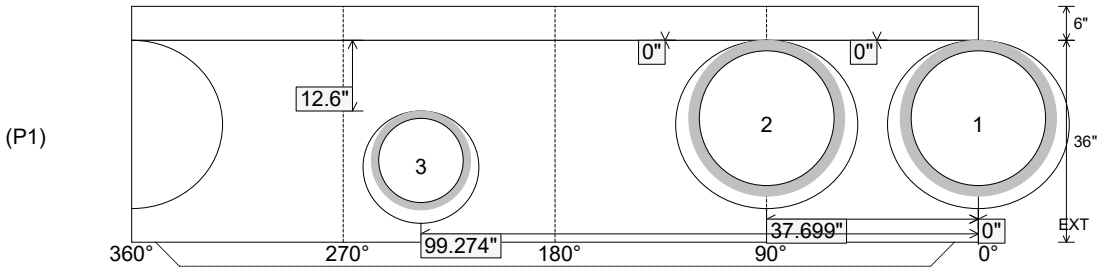

Coating (Int): Coating (Ext):	Seam Up: Tongue Seam Dn: n/a	Wall Thickness: 5" Floor Height: 6"	Height (Int): 36" Height (Ext): 42"	Weight (Net): 3078 lb Volume (Net): 0.79cu.yd

Job Name: 26-2424 Fifth Third Mt. Juliet Central Job Location: Mount Juliet, TN 37122 Contractor: Hayes Pipe Supply	Plant: 100 6/30/2026 11:38:13 AM	Tech: Jared - A PC: Erica Bradley	

Structure ID: ST-3 ST-MH

P1 MH048BA30 MH BASE

P3) 24" - CASTING HEIGHT - 7"	0 lb
P2) 48" - MH FLAT TOP w/ 24" ECC Hole - 12"	1561 lb
P1) 48" - MH BASE - 30"	3155 lb
1) 48" - Conseal CS-102 1.00"	0 lb
1) 24" - Conseal CS-102 1.00"	0 lb
2) Hole - 20	0 lb
2) MH Step ML-10-TDS-NCR - 10"	0 lb

Structure Total:	4716 lb

Structure Notes: .
1. HOE MC-375 F/C STORM PROVIDED BY OTHERS
2. PER ASTM C478 SPECIFICATIONS.
3. CONCRETE = 4,000 PSI AT 28 DAYS.
4. REINFORCING PER ASTM A615 (GRADE 60).
- TOP SLAB (As .62) #5 BARS AT 6" C.C.E.W..
- RISER/WALLS (As .12)
- FLOOR (As .31) #5 BARS AT 12" C.C.E.W.

Rim: 541.35' Rim to Invert: 4.1' Slack: 1.5" Sump: 1.3" Step Position: 222.5°

Position	Elev	Angle	Ext. (cw)	Pipe	Pipe OD	Connector	Hole	Horz Size	Up (_)	Offset
Invert 1	537.25'	0°	0"	15" HDPE	17.6"	Hole 20	20"	20.629"	0"	0"
Invert 2	537.25'	85°	43.022"	15" HDPE	17.6"	Hole 20	20"	20.629"	0"	0"
Invert 3										
Invert 4										
Invert 5										
Invert 6										
Invert 7										
Invert 8										

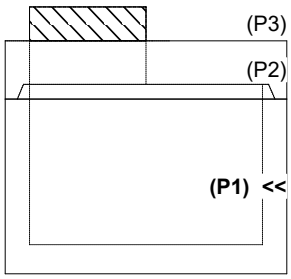

RIGHT-SIDE UP VIEW (int. dimensions)

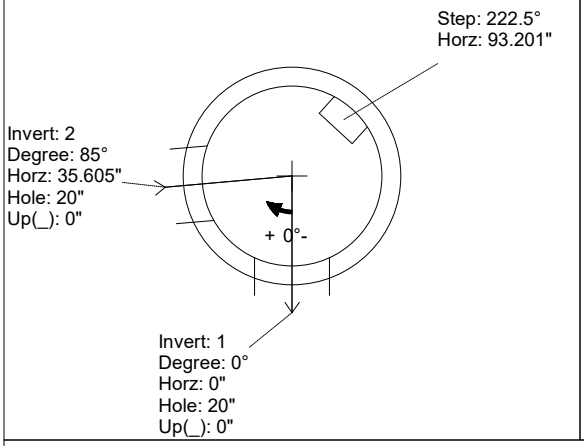

UPSIDE-DOWN VIEW (int. dimenions)

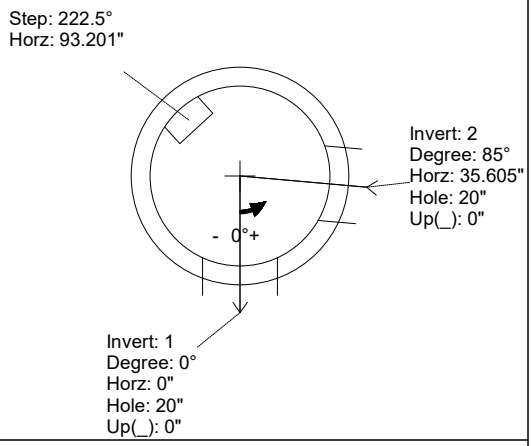

INSIDE WALL DIMENSIONS

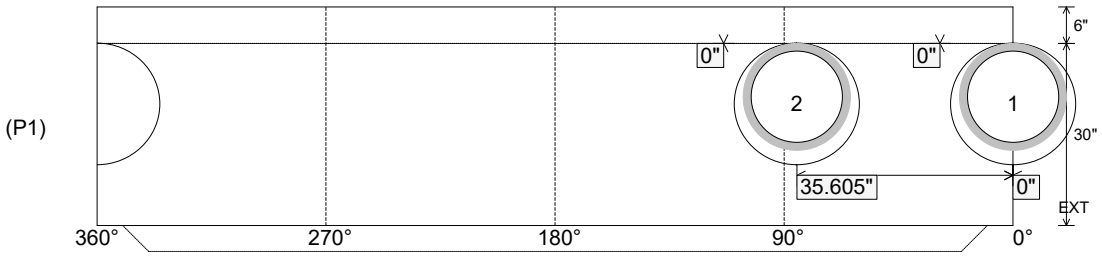

Coating (Int): Coating (Ext):	Seam Up: Tongue Seam Dn: n/a	Wall Thickness: 5" Floor Height: 6"	Height (Int): 30" Height (Ext): 36"	Weight (Net): 3155 lb Volume (Net): 0.81cu.yd

Job Name: 26-2801 900640 QuikTrip No. 0680 Job Location: CPU Contractor: Contech Engineering Solutions	Plant: Beaver Dam 6/25/2026 11:00:46 AM	Tech: S. Felletter PC: C. Goff	

Structure ID: 10-CS-4

P4 MH048LD12-30 MH FLAT LID w/30in ECC Hole F/G

P5) 30" - CASTING HEIGHT - 4"	0 lb
P4) 48" - MH FLAT LID w/30in ECC Hole F/G - 12"	1413 lb
P3) 48" - MH RISER T/G - 30"	2096 lb
P2) 48" - MH RISER SPECIAL T/G - 72"	4934 lb
P1) 48" - MH BASE T/n - 18"	2588 lb
1) ASSEMBLY REQUIRED	0 lb
1) CVSTENCILING	0 lb
3) 48" - Conseal CS-102 1.00"	0 lb
2) PSX - 12-08 NYLO	16 lb
Structure Total:	11047 lb

Structure Notes: .
4" CASTING BY OTHERS
.
LIFTING ANCHORS TO BE INSTALLED ON THE OUTSIDE OF THE STRUCTURE
.
ICAST TO INSTALL THE INTERNALS
.
CONTECH'S LOGO AS WELL AS THE INLET AND OUTLET MUST BE STENCILED ONTO THE STRUCTURE

NOTES:
1. MANUFACTURED TO ASTM C-478 (LATEST REVISION).
2. CONCRETE: 4,000 PSI AT 28 DAYS.
3. REINFORCING: #5 BAR @ 6" C.C. E.W. (GRADE 60).

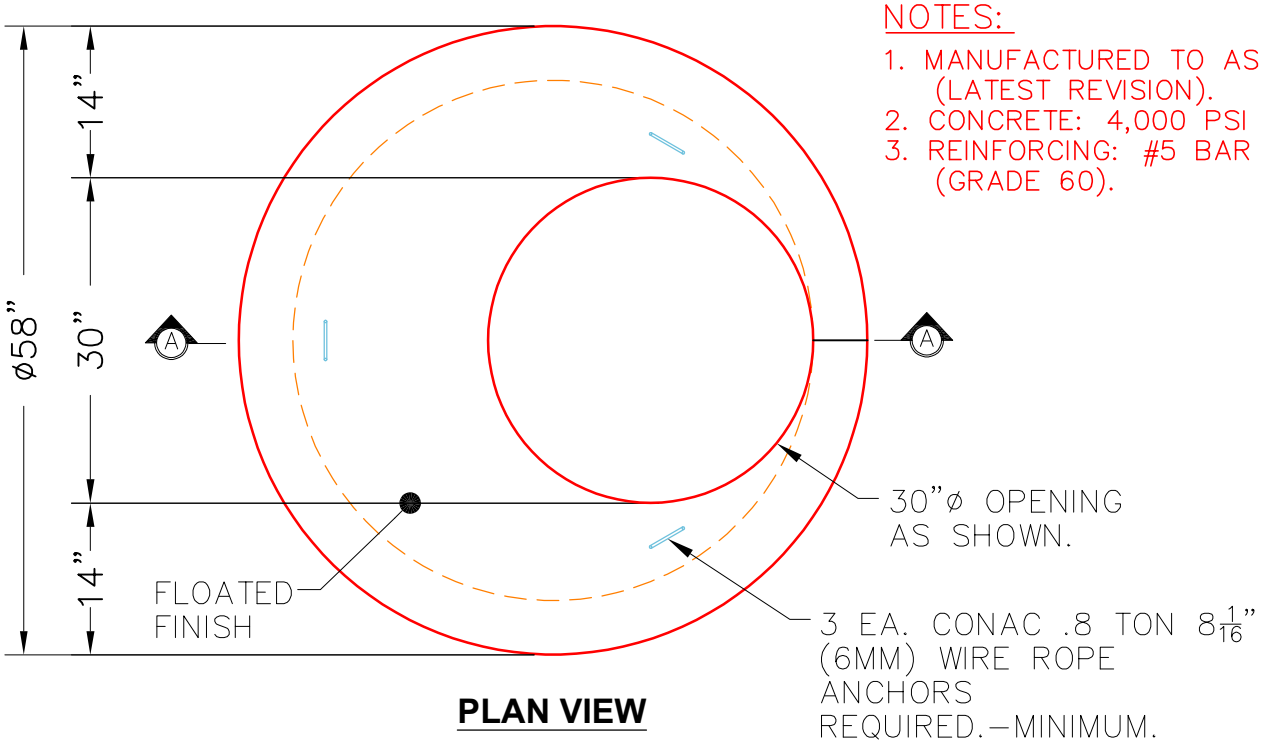

PLAN VIEW

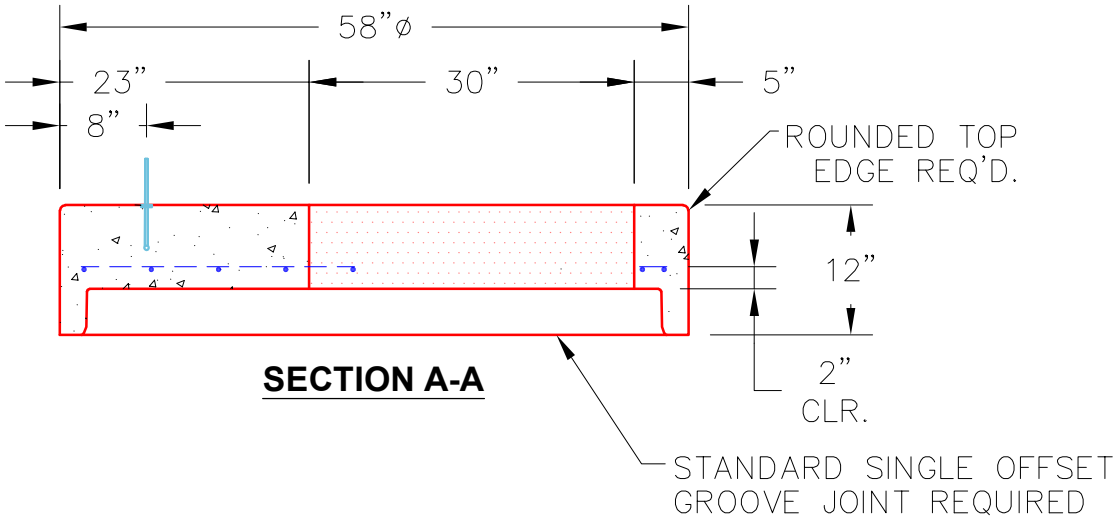

SECTION A-A

Coating (Int): Coating (Ext):	Seam Up: Flat Seam Dn: Groove	Wall Thickness: 5"	Height (Ext): 12"	Weight (Net): 1413 lb Volume (Net): 0.36cu.yd

Job Name: 26-2080 - The Cumberland Job Location: Bowling Green, KY Contractor: J & J Concrete & Excavating, LLC	Plant: 100 6/22/2026 6:23:34 PM	Tech: Jared - A PC: E. Bradley	

Structure ID: C1 SS-MH

P1 MH048BA24 MH BASE T/n

P3) 24" - CASTING HEIGHT - 7"	0 lb
P2) 48" - ECC CONE w/ 24" HOLE F/G - 30"	2050 lb
P1) 48" - MH BASE T/n - 24"	2943 lb
1) JOINT WRAP - 12" WD x 048" MAC WRAP	0 lb
1) 48" - MH INVERT CHANNEL - FULL HEIGHT	1440 lb
1) CASTING - HOE MC-375 F/C Sanitary	271 lb
1) 48" - Conseal CS-102 1.00" (Double)	0 lb
1) 24" - Conseal CS-102 1.00" (Double)	0 lb
1) A-Lok - 0285	1 lb
2) A-Lok - 0200	2 lb
4) MH Step ML-10-TDS-NCR - 10"	0 lb
Structure Total:	6707 lb

Structure Notes:
1. PER ASTM C-478 SPECIFICATIONS
2. CONCRETE: 4,000 PSI AT 28 DAYS
3. REINFORCEMENT: PER ASTM A615
4. INVERT CHANNEL REQUIRED
5. STEPS AT 0 DEGREES
6. HOE MC-375 FRAME & COVER "SANITARY" SUPPLIED BY ICAST

Rim: 530.91' Rim to Invert: 5.1' Slack: 2.2" Sump: 2" Step Position: 0°

Position	Elev	Angle	Ext. (cw)	Pipe	Pipe OD	Connector	Hole	Horz Size	Up (_)	Offset
Invert 1	525.81'	0°	0"	8" PVC SDR35	8.5"	A-Lok 0285	9.75"	9.818"	1.125"	0"
Invert 2	525.91'	180°	91.125"	6" PVC SDR35	6.25"	A-Lok 0200	7"	7.025"	2.75"	0"
Invert 3	525.91'	270°	136.625"	6" PVC SDR35	6.25"	A-Lok 0200	7"	7.025"	2.75"	0"
Invert 4										
Invert 5										
Invert 6										
Invert 7										
Invert 8										

RIGHT-SIDE UP VIEW (int. dimensions)

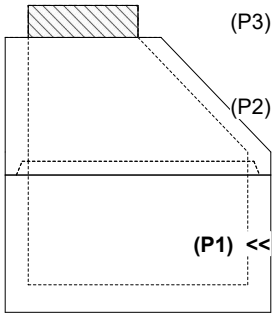

UPSIDE-DOWN VIEW (int. dimenions)

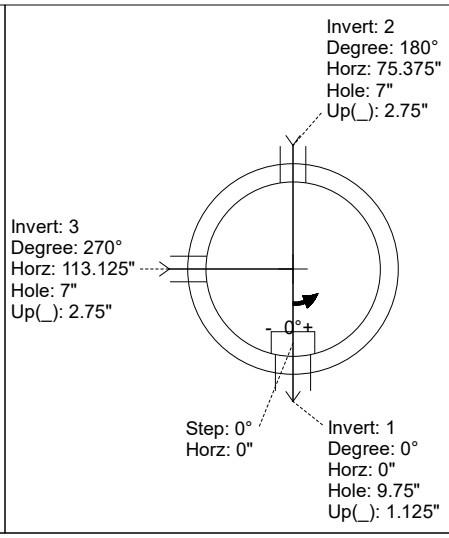

INSIDE WALL DIMENSIONS

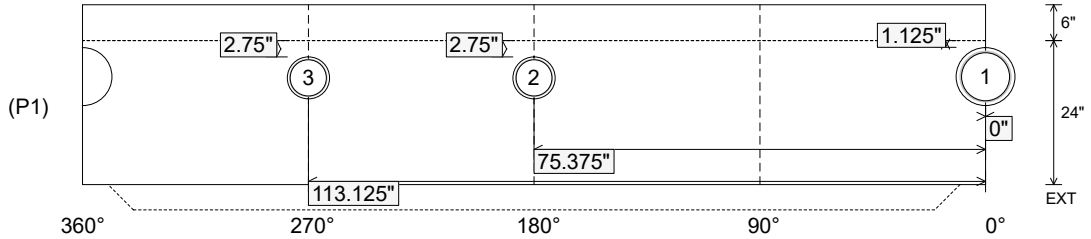

Coating (Int): Coating (Ext):	Seam Up: Tongue Seam Dn: n/a	Wall Thickness: 5" Floor Height: 6"	Height (Int): 24" Height (Ext): 30"	Weight (Net): 2943 lb Volume (Net): 0.75cu.yd

Job Name: 26-2080 - The Cumberland Job Location: Bowling Green, KY Contractor: J & J Concrete & Excavating, LLC	Plant: 100 6/22/2026 6:23:34 PM	Tech: Jared - A PC: E. Bradley	

Structure ID: C1 SS-MH

P1 MH048BA24 MH BASE T/n

P3) 24" - CASTING HEIGHT - 7"	0 lb
P2) 48" - ECC CONE w/ 24" HOLE F/G - 30"	2050 lb
P1) 48" - MH BASE T/n - 24"	2943 lb
1) JOINT WRAP - 12" WD x 048" MAC WRAP	0 lb
1) 48" - MH INVERT CHANNEL - FULL HEIGHT	1440 lb
1) CASTING - HOE MC-375 F/C Sanitary	271 lb
1) 48" - Conseal CS-102 1.00" (Double)	0 lb
1) 24" - Conseal CS-102 1.00" (Double)	0 lb
1) A-Lok - 0285	1 lb
2) A-Lok - 0200	2 lb
4) MH Step ML-10-TDS-NCR - 10"	0 lb
Structure Total:	6707 lb

Structure Notes:
1. PER ASTM C-478 SPECIFICATIONS
2. CONCRETE: 4,000 PSI AT 28 DAYS
3. REINFORCEMENT: PER ASTM A615
4. INVERT CHANNEL REQUIRED
5. STEPS AT 0 DEGREES
6. HOE MC-375 FRAME & COVER "SANITARY" SUPPLIED BY ICAST

Rim: 530.91' Rim to Invert: 5.1' Slack: 2.2" Sump: 2" Step Position: 0°

Position	Elev	Angle	Ext. (cw)	Pipe	Pipe OD	Connector	Hole	Horz Size	Up (_)	Offset
Invert 1	525.81'	0°	0"	8" PVC SDR35	8.5"	A-Lok 0285	9.75"	9.818"	1.125"	0"
Invert 2	525.91'	180°	91.125"	6" PVC SDR35	6.25"	A-Lok 0200	7"	7.025"	2.75"	0"
Invert 3	525.91'	270°	136.625"	6" PVC SDR35	6.25"	A-Lok 0200	7"	7.025"	2.75"	0"
Invert 4										
Invert 5										
Invert 6										
Invert 7										
Invert 8										

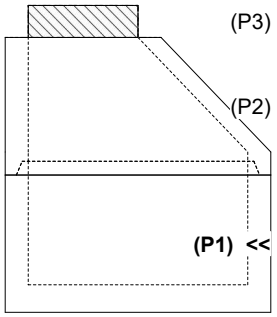

RIGHT-SIDE UP VIEW (int. dimensions)

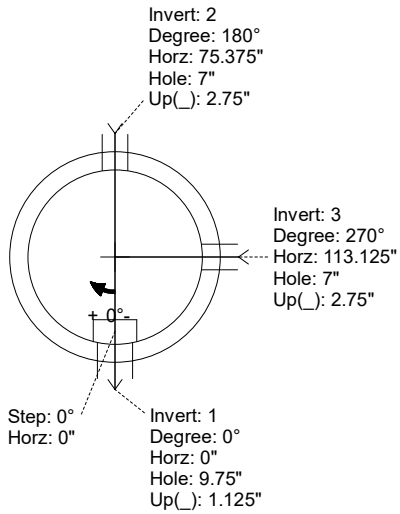

UPSIDE-DOWN VIEW (int. dimenions)

INVERT CHANNEL DRAWING

INSIDE WALL DIMENSIONS

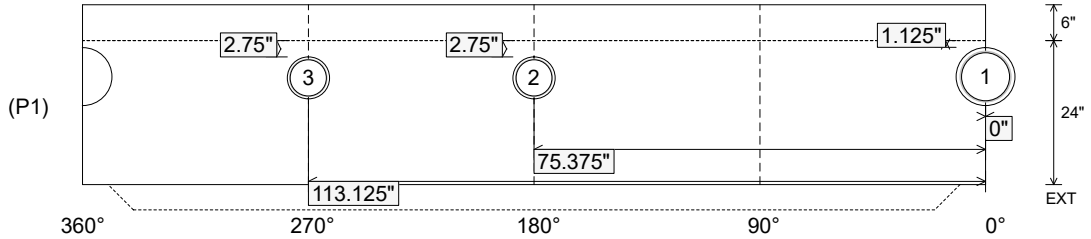

Coating (Int): Coating (Ext):	Seam Up: Tongue Seam Dn: n/a	Wall Thickness: 5" Floor Height: 6"	Height (Int): 24" Height (Ext): 30"	Weight (Net): 2943 lb Volume (Net): 0.75cu.yd

Job Name: 26-2080 - The Cumberland Job Location: Bowling Green, KY Contractor: J & J Concrete & Excavating, LLC	Plant: 100 6/22/2026 6:23:33 PM	Tech: Jared - A PC: E. Bradley	

Structure ID: B3 SS-MH

P1 MH048BAVF **MH BASE Custom Ht T/n**

P3) 24" - CASTING HEIGHT - 7"	0 lb
P2) 48" - ECC CONE w/ 24" HOLE F/G - 42"	3200 lb
P1) 48" - MH BASE Custom Ht T/n - 28"	3255 lb
1) JOINT WRAP - 12" WD x 048" MAC WRAP	0 lb
1) 48" - MH INVERT CHANNEL - FULL HEIGHT	1440 lb
1) CASTING - HOE MC-375 F/C Sanitary	271 lb
1) 48" - Conseal CS-102 1.00" (Double)	0 lb
1) 24" - Conseal CS-102 1.00" (Double)	0 lb
1) A-Lok - 0285	1 lb
5) MH Step ML-10-TDS-NCR - 10"	0 lb
Structure Total:	8167 lb

Structure Notes:
1. PER ASTM C-478 SPECIFICATIONS
2. CONCRETE: 4,000 PSI AT 28 DAYS
3. REINFORCEMENT: PER ASTM A615
4. INVERT CHANNEL REQUIRED
5. STEPS AT 0 DEGREES
6. HOE MC-375 FRAME & COVER "SANITARY" SUPPLIED BY ICAST

Rim: 536.35' Rim to Invert: 6.42' Slack: 2.04" Sump: 2" Step Position: 0°

Position	Elev	Angle	Ext. (cw)	Pipe	Pipe OD	Connector	Hole	Horz Size	Up (_)	Offset
Invert 1	529.93'	0°	0"	8" PVC SDR35	8.5"	A-Lok 0285	9.75"	9.818"	1.125"	0"
Invert 2										
Invert 3										
Invert 4										
Invert 5										
Invert 6										
Invert 7										
Invert 8										

RIGHT-SIDE UP VIEW (int. dimensions)

UPSIDE-DOWN VIEW (int. dimenions)

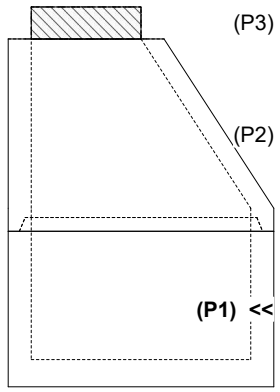

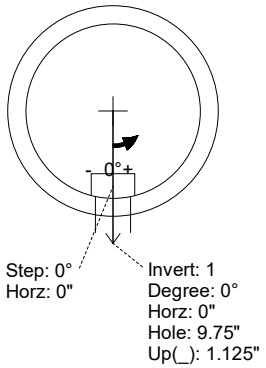

INSIDE WALL DIMENSIONS

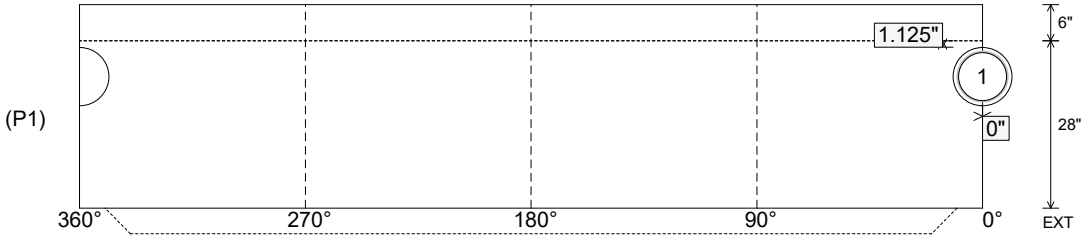

Coating (Int): Coating (Ext):	Seam Up: Tongue Seam Dn: n/a	Wall Thickness: 5" Floor Height: 6"	Height (Int): 28" Height (Ext): 34"	Weight (Net): 3255 lb Volume (Net): 0.83cu.yd

Job Name: 26-2080 - The Cumberland Job Location: Bowling Green, KY Contractor: J & J Concrete & Excavating, LLC	Plant: 100 6/22/2026 6:23:33 PM	Tech: Jared - A PC: E. Bradley	

Structure ID: B3 SS-MH

P1 MH048BAVF **MH BASE Custom Ht T/n**

P3) 24" - CASTING HEIGHT - 7"	0 lb
P2) 48" - ECC CONE w/ 24" HOLE F/G - 42"	3200 lb
P1) 48" - MH BASE Custom Ht T/n - 28"	3255 lb
1) JOINT WRAP - 12" WD x 048" MAC WRAP	0 lb
1) 48" - MH INVERT CHANNEL - FULL HEIGHT	1440 lb
1) CASTING - HOE MC-375 F/C Sanitary	271 lb
1) 48" - Conseal CS-102 1.00" (Double)	0 lb
1) 24" - Conseal CS-102 1.00" (Double)	0 lb
1) A-Lok - 0285	1 lb
5) MH Step ML-10-TDS-NCR - 10"	0 lb
Structure Total:	8167 lb

Structure Notes:
1. PER ASTM C-478 SPECIFICATIONS
2. CONCRETE: 4,000 PSI AT 28 DAYS
3. REINFORCEMENT: PER ASTM A615
4. INVERT CHANNEL REQUIRED
5. STEPS AT 0 DEGREES
6. HOE MC-375 FRAME & COVER "SANITARY" SUPPLIED BY ICAST

Rim: 536.35' Rim to Invert: 6.42' Slack: 2.04" Sump: 2" Step Position: 0°

Position	Elev	Angle	Ext. (cw)	Pipe	Pipe OD	Connector	Hole	Horz Size	Up (_)	Offset
Invert 1	529.93'	0°	0"	8" PVC SDR35	8.5"	A-Lok 0285	9.75"	9.818"	1.125"	0"
Invert 2										
Invert 3										
Invert 4										
Invert 5										
Invert 6										
Invert 7										
Invert 8										

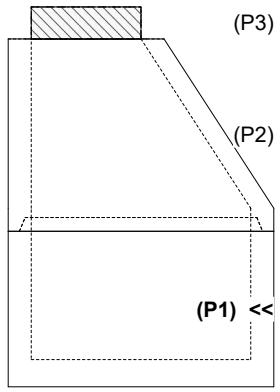

RIGHT-SIDE UP VIEW (int. dimensions) UPSIDE-DOWN VIEW (int. dimenions)

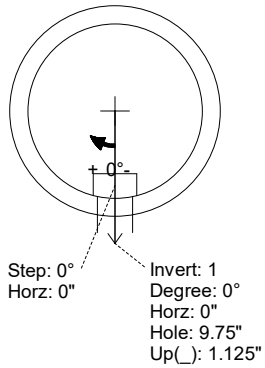

INVERT CHANNEL DRAWING

(0° TO 180° STRAIGHT THROUGH)

INSIDE WALL DIMENSIONS

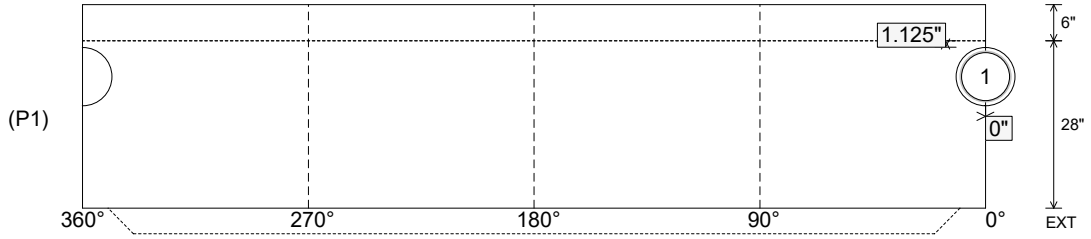

Coating (Int): Coating (Ext):	Seam Up: Tongue Seam Dn: n/a	Wall Thickness: 5" Floor Height: 6"	Height (Int): 28" Height (Ext): 34"	Weight (Net): 3255 lb Volume (Net): 0.83cu.yd

Job Name: 26-2080 - The Cumberland Job Location: Bowling Green, KY Contractor: J & J Concrete & Excavating, LLC	Plant: 100 6/22/2026 6:23:33 PM	Tech: Jared - A PC: E. Bradley	

Structure ID: B2 SS-MH

P1 MH048BAVF **MH BASE Custom Ht T/n**

P4) 24" - CASTING HEIGHT - 7"	0 lb
P3) 48" - ECC CONE w/ 24" HOLE F/G - 30"	2050 lb
P2) 48" - MH RISER T/G - 24"	1677 lb
P1) 48" - MH BASE Custom Ht T/n - 45"	4379 lb
2) JOINT WRAP - 12" WD x 048" MAC WRAP	0 lb
1) 48" - MH INVERT CHANNEL - FULL HEIGHT	1440 lb
1) CASTING - HOE MC-375 F/C Sanitary	271 lb
1) 48" - Conseal CS-102 1.00" (Double)	0 lb
1) 24" - Conseal CS-102 1.00" (Double)	0 lb
3) A-Lok - 0285	3 lb
8) MH Step ML-10-TDS-NCR - 10"	0 lb
Structure Total:	9820 lb

Structure Notes:
1. PER ASTM C-478 SPECIFICATIONS
2. CONCRETE: 4,000 PSI AT 28 DAYS
3. REINFORCEMENT: PER ASTM A615
4. INVERT CHANNEL REQUIRED
5. STEPS AT 0 DEGREES
6. HOE MC-375 FRAME & COVER "SANITARY" SUPPLIED BY ICAST

Rim: 533.35' Rim to Invert: 8.82' Slack: 1.84" Sump: 2" Step Position: 0°

Position	Elev	Angle	Ext. (cw)	Pipe	Pipe OD	Connector	Hole	Horz Size	Up (_)	Offset
Invert 1	524.53'	0°	0"	8" PVC SDR35	8.5"	A-Lok 0285	9.75"	9.818"	1.125"	0"
Invert 2	524.63'	90°	45.5"	8" PVC SDR35	8.5"	A-Lok 0285	9.75"	9.818"	2.375"	0"
Invert 3	526.43'	270°	136.625"	8" PVC SDR35	8.5"	A-Lok 0285	9.75"	9.818"	23.875"	0"
Invert 4										
Invert 5										
Invert 6										
Invert 7										
Invert 8										

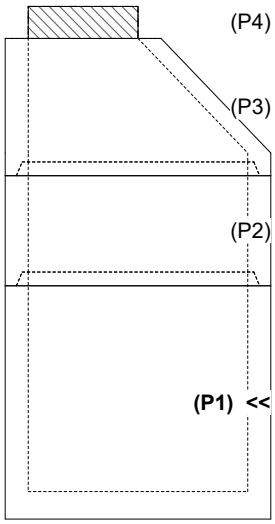

RIGHT-SIDE UP VIEW (int. dimensions)

UPSIDE-DOWN VIEW (int. dimenions)

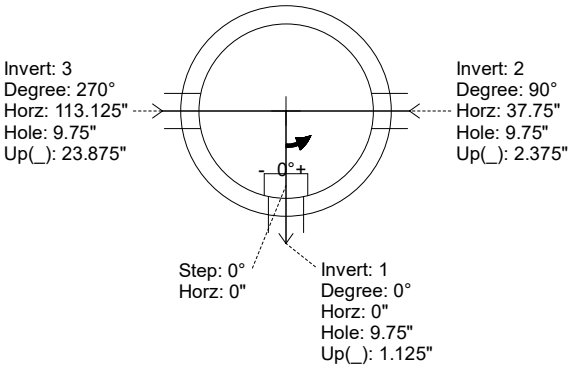

INSIDE WALL DIMENSIONS

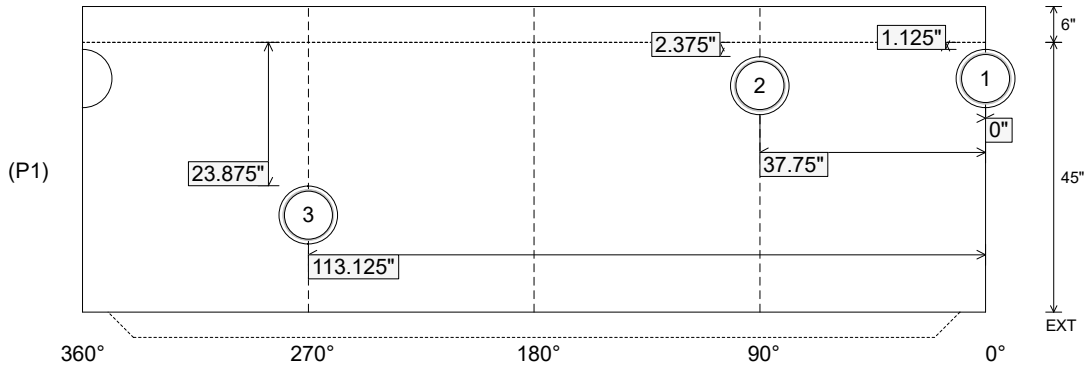

Coating (Int): Coating (Ext):	Seam Up: Tongue Seam Dn: n/a	Wall Thickness: 5" Floor Height: 6"	Height (Int): 45" Height (Ext): 51"	Weight (Net): 4379 lb Volume (Net): 1.12cu.yd

Job Name: 26-2080 - The Cumberland Job Location: Bowling Green, KY Contractor: J & J Concrete & Excavating, LLC	Plant: 100 6/22/2026 6:23:33 PM	Tech: Jared - A PC: E. Bradley	

Structure ID: B2 SS-MH

P1 MH048BAVF **MH BASE Custom Ht T/n**

P4) 24" - CASTING HEIGHT - 7"	0 lb
P3) 48" - ECC CONE w/ 24" HOLE F/G - 30"	2050 lb
P2) 48" - MH RISER T/G - 24"	1677 lb
P1) 48" - MH BASE Custom Ht T/n - 45"	4379 lb
2) JOINT WRAP - 12" WD x 048" MAC WRAP	0 lb
1) 48" - MH INVERT CHANNEL - FULL HEIGHT	1440 lb
1) CASTING - HOE MC-375 F/C Sanitary	271 lb
1) 48" - Conseal CS-102 1.00" (Double)	0 lb
1) 24" - Conseal CS-102 1.00" (Double)	0 lb
3) A-Lok - 0285	3 lb
8) MH Step ML-10-TDS-NCR - 10"	0 lb
Structure Total:	9820 lb

Structure Notes:
1. PER ASTM C-478 SPECIFICATIONS
2. CONCRETE: 4,000 PSI AT 28 DAYS
3. REINFORCEMENT: PER ASTM A615
4. INVERT CHANNEL REQUIRED
5. STEPS AT 0 DEGREES
6. HOE MC-375 FRAME & COVER "SANITARY" SUPPLIED BY ICAST

Rim: 533.35' Rim to Invert: 8.82' Slack: 1.84" Sump: 2" Step Position: 0°

Position	Elev	Angle	Ext. (cw)	Pipe	Pipe OD	Connector	Hole	Horz Size	Up (_)	Offset
Invert 1	524.53'	0°	0"	8" PVC SDR35	8.5"	A-Lok 0285	9.75"	9.818"	1.125"	0"
Invert 2	524.63'	90°	45.5"	8" PVC SDR35	8.5"	A-Lok 0285	9.75"	9.818"	2.375"	0"
Invert 3	526.43'	270°	136.625"	8" PVC SDR35	8.5"	A-Lok 0285	9.75"	9.818"	23.875"	0"
Invert 4										
Invert 5										
Invert 6										
Invert 7										
Invert 8										

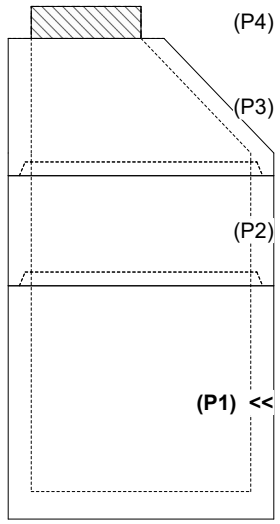

RIGHT-SIDE UP VIEW (int. dimensions)

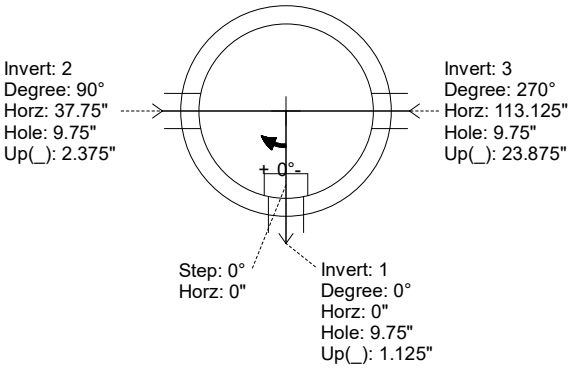

UPSIDE-DOWN VIEW (int. dimenions)

INVERT CHANNEL DRAWING

INSIDE WALL DIMENSIONS

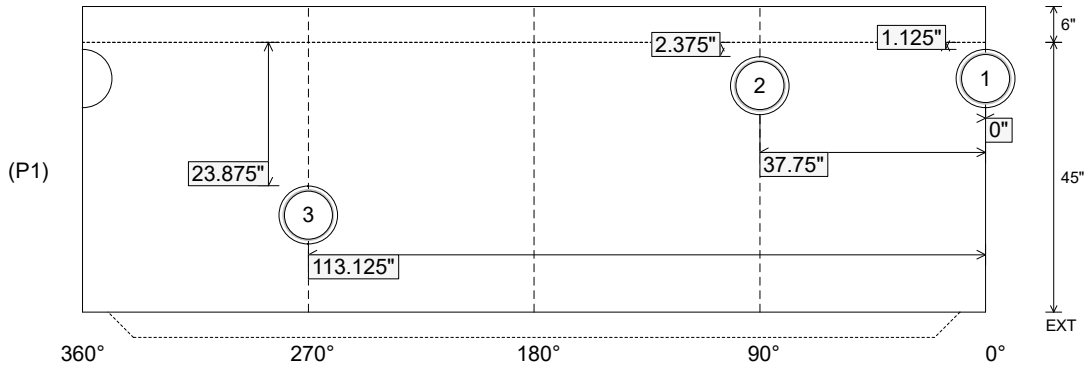

Coating (Int): Coating (Ext):	Seam Up: Tongue Seam Dn: n/a	Wall Thickness: 5" Floor Height: 6"	Height (Int): 45" Height (Ext): 51"	Weight (Net): 4379 lb Volume (Net): 1.12cu.yd

Job Name: 26-2080 - The Cumberland Job Location: Bowling Green, KY Contractor: J & J Concrete & Excavating, LLC	Plant: 100 6/22/2026 6:23:32 PM	Tech: Jared - A PC: E. Bradley	

Structure ID: B1 SS-MH

P1 MH048BAVF **MH BASE Custom Ht T/n**

P4) 24" - CASTING HEIGHT - 7"	0 lb
P3) 48" - ECC CONE w/ 24" HOLE F/G - 24"	1550 lb
P2) 48" - MH RISER T/G - 48"	3353 lb
P1) 48" - MH BASE Custom Ht T/n - 22"	2804 lb
2) JOINT WRAP - 12" WD x 048" MAC WRAP	0 lb
1) 48" - MH INVERT CHANNEL - FULL HEIGHT	1440 lb
1) CASTING - HOE MC-375 F/C Sanitary	271 lb
1) 48" - Conseal CS-102 1.00" (Double)	0 lb
1) 24" - Conseal CS-102 1.00" (Double)	0 lb
2) A-Lok - 0285	2 lb
7) MH Step ML-10-TDS-NCR - 10"	0 lb
Structure Total:	9420 lb

Structure Notes:
1. PER ASTM C-478 SPECIFICATIONS
2. CONCRETE: 4,000 PSI AT 28 DAYS
3. REINFORCEMENT: PER ASTM A615
4. INVERT CHANNEL REQUIRED
5. STEPS AT 0 DEGREES
6. HOE MC-375 FRAME & COVER "SANITARY" SUPPLIED BY ICAST

Rim: 531.9' Rim to Invert: 8.46' Slack: 2.52" Sump: 2" Step Position: 0°

Position	Elev	Angle	Ext. (cw)	Pipe	Pipe OD	Connector	Hole	Horz Size	Up (_)	Offset
Invert 1	523.44'	0°	0"	8" PVC SDR35	8.5"	A-Lok 0285	9.75"	9.818"	1.125"	0"
Invert 2	523.54'	211°	106.75"	8" PVC SDR35	8.5"	A-Lok 0285	9.75"	9.818"	2.375"	0"
Invert 3										
Invert 4										
Invert 5										
Invert 6										
Invert 7										
Invert 8										

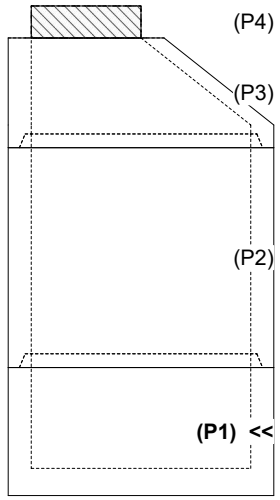

RIGHT-SIDE UP VIEW (int. dimensions)

UPSIDE-DOWN VIEW (int. dimenions)

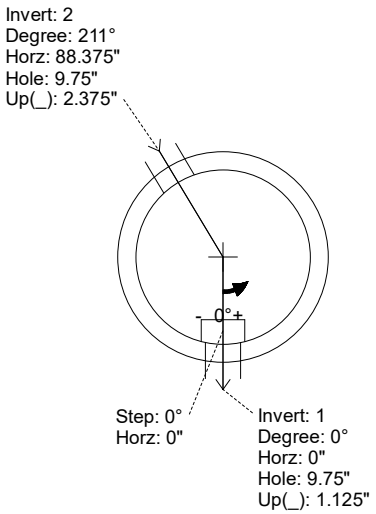

INSIDE WALL DIMENSIONS

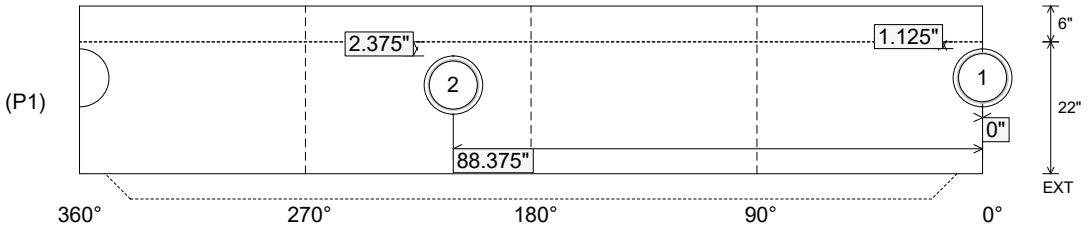

Coating (Int): Coating (Ext):	Seam Up: Tongue Seam Dn: n/a	Wall Thickness: 5" Floor Height: 6"	Height (Int): 22" Height (Ext): 28"	Weight (Net): 2804 lb Volume (Net): 0.72cu.yd

Job Name: 26-2080 - The Cumberland Job Location: Bowling Green, KY Contractor: J & J Concrete & Excavating, LLC	Plant: 100 6/22/2026 6:23:32 PM	Tech: Jared - A PC: E. Bradley	

Structure ID: B1 SS-MH

P1 MH048BAVF **MH BASE Custom Ht T/n**

P4) 24" - CASTING HEIGHT - 7"	0 lb
P3) 48" - ECC CONE w/ 24" HOLE F/G - 24"	1550 lb
P2) 48" - MH RISER T/G - 48"	3353 lb
P1) 48" - MH BASE Custom Ht T/n - 22"	2804 lb
2) JOINT WRAP - 12" WD x 048" MAC WRAP	0 lb
1) 48" - MH INVERT CHANNEL - FULL HEIGHT	1440 lb
1) CASTING - HOE MC-375 F/C Sanitary	271 lb
1) 48" - Conseal CS-102 1.00" (Double)	0 lb
1) 24" - Conseal CS-102 1.00" (Double)	0 lb
2) A-Lok - 0285	2 lb
7) MH Step ML-10-TDS-NCR - 10"	0 lb
Structure Total:	9420 lb

Structure Notes:
1. PER ASTM C-478 SPECIFICATIONS
2. CONCRETE: 4,000 PSI AT 28 DAYS
3. REINFORCEMENT: PER ASTM A615
4. INVERT CHANNEL REQUIRED
5. STEPS AT 0 DEGREES
6. HOE MC-375 FRAME & COVER "SANITARY" SUPPLIED BY ICAST

Rim: 531.9' Rim to Invert: 8.46' Slack: 2.52" Sump: 2" Step Position: 0°

Position	Elev	Angle	Ext. (cw)	Pipe	Pipe OD	Connector	Hole	Horz Size	Up (_)	Offset
Invert 1	523.44'	0°	0"	8" PVC SDR35	8.5"	A-Lok 0285	9.75"	9.818"	1.125"	0"
Invert 2	523.54'	211°	106.75"	8" PVC SDR35	8.5"	A-Lok 0285	9.75"	9.818"	2.375"	0"
Invert 3										
Invert 4										
Invert 5										
Invert 6										
Invert 7										
Invert 8										

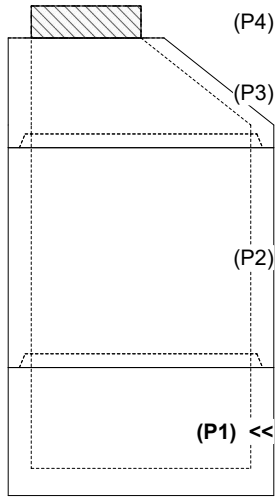

RIGHT-SIDE UP VIEW (int. dimensions)

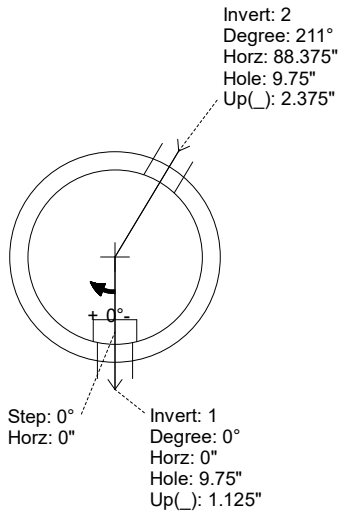

UPSIDE-DOWN VIEW (int. dimenions)

INVERT CHANNEL DRAWING

INSIDE WALL DIMENSIONS

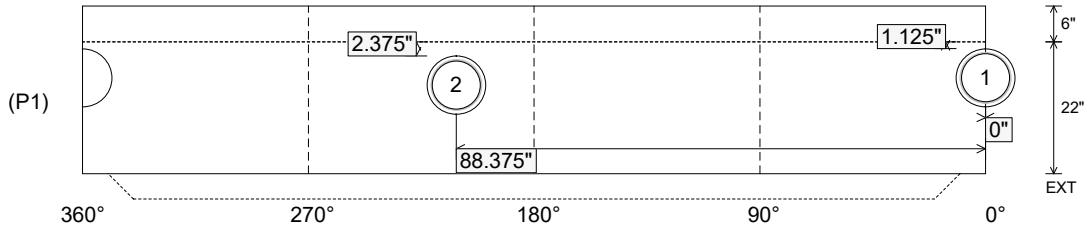

Coating (Int): Coating (Ext):	Seam Up: Tongue Seam Dn: n/a	Wall Thickness: 5" Floor Height: 6"	Height (Int): 22" Height (Ext): 28"	Weight (Net): 2804 lb Volume (Net): 0.72cu.yd

Job Name: 26-2080 - The Cumberland Job Location: Bowling Green, KY Contractor: J & J Concrete & Excavating, LLC	Plant: 100 6/22/2026 6:23:32 PM	Tech: Jared - A PC: E. Bradley	

Structure ID: A4 SS-MH

P1 MH048BAVF **MH BASE Custom Ht T/n**

P3) 24" - CASTING HEIGHT - 7"	0 lb
P2) 48" - ECC CONE w/ 24" HOLE F/G - 24"	1550 lb
P1) 48" - MH BASE Custom Ht T/n - 34"	3658 lb
1) JOINT WRAP - 12" WD x 048" MAC WRAP	0 lb
1) 48" - MH INVERT CHANNEL - FULL HEIGHT	1440 lb
1) CASTING - HOE MC-375 F/C Sanitary	271 lb
1) 48" - Conseal CS-102 1.00" (Double)	0 lb
1) 24" - Conseal CS-102 1.00" (Double)	0 lb
1) A-Lok - 0285	1 lb
1) A-Lok - 0200	1 lb
4) MH Step ML-10-TDS-NCR - 10"	0 lb
Structure Total:	6921 lb

Structure Notes:
1. PER ASTM C-478 SPECIFICATIONS
2. CONCRETE: 4,000 PSI AT 28 DAYS
3. REINFORCEMENT: PER ASTM A615
4. INVERT CHANNEL REQUIRED
5. STEPS AT 0 DEGREES
6. HOE MC-375 FRAME & COVER "SANITARY" SUPPLIED BY ICAST

Rim: 533.1' Rim to Invert: 5.47' Slack: 2.64" Sump: 2" Step Position: 0°

Position	Elev	Angle	Ext. (cw)	Pipe	Pipe OD	Connector	Hole	Horz Size	Up (_)	Offset
Invert 1	527.63'	0°	0"	8" PVC SDR35	8.5"	A-Lok 0285	9.75"	9.818"	1.125"	0"
Invert 2	527.73'	270°	136.625"	6" PVC SDR35	6.25"	A-Lok 0200	7"	7.025"	2.75"	0"
Invert 3										
Invert 4										
Invert 5										
Invert 6										
Invert 7										
Invert 8										

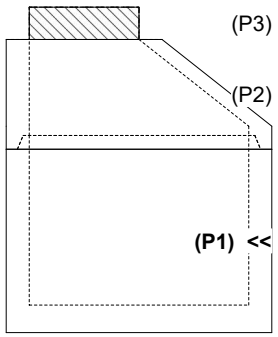

RIGHT-SIDE UP VIEW (int. dimensions)

UPSIDE-DOWN VIEW (int. dimenions)

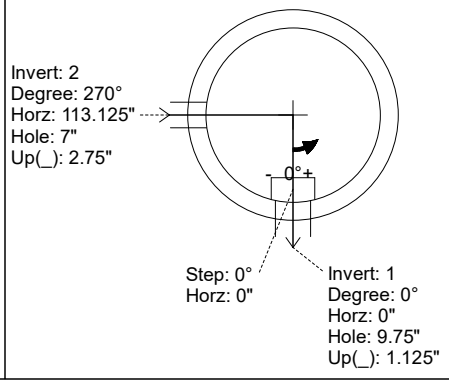

INSIDE WALL DIMENSIONS

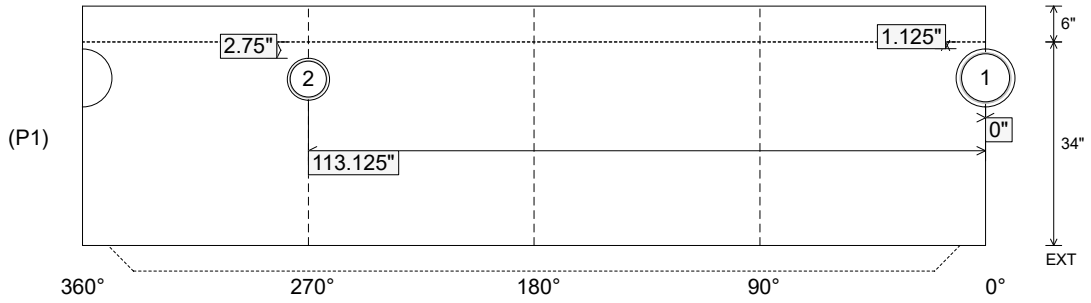

Coating (Int): Coating (Ext):	Seam Up: Tongue Seam Dn: n/a	Wall Thickness: 5" Floor Height: 6"	Height (Int): 34" Height (Ext): 40"	Weight (Net): 3658 lb Volume (Net): 0.93cu.yd

Job Name: 26-2080 - The Cumberland Job Location: Bowling Green, KY Contractor: J & J Concrete & Excavating, LLC	Plant: 100 6/22/2026 6:23:32 PM	Tech: Jared - A PC: E. Bradley	

Structure ID: A4 SS-MH

P1 MH048BAVF **MH BASE Custom Ht T/n**

P3) 24" - CASTING HEIGHT - 7"	0 lb
P2) 48" - ECC CONE w/ 24" HOLE F/G - 24"	1550 lb
P1) 48" - MH BASE Custom Ht T/n - 34"	3658 lb
1) JOINT WRAP - 12" WD x 048" MAC WRAP	0 lb
1) 48" - MH INVERT CHANNEL - FULL HEIGHT	1440 lb
1) CASTING - HOE MC-375 F/C Sanitary	271 lb
1) 48" - Conseal CS-102 1.00" (Double)	0 lb
1) 24" - Conseal CS-102 1.00" (Double)	0 lb
1) A-Lok - 0285	1 lb
1) A-Lok - 0200	1 lb
4) MH Step ML-10-TDS-NCR - 10"	0 lb
Structure Total:	6921 lb

Structure Notes:
1. PER ASTM C-478 SPECIFICATIONS
2. CONCRETE: 4,000 PSI AT 28 DAYS
3. REINFORCEMENT: PER ASTM A615
4. INVERT CHANNEL REQUIRED
5. STEPS AT 0 DEGREES
6. HOE MC-375 FRAME & COVER "SANITARY" SUPPLIED BY ICAST

Rim: 533.1' Rim to Invert: 5.47' Slack: 2.64" Sump: 2" Step Position: 0°

Position	Elev	Angle	Ext. (cw)	Pipe	Pipe OD	Connector	Hole	Horz Size	Up (_)	Offset
Invert 1	527.63'	0°	0"	8" PVC SDR35	8.5"	A-Lok 0285	9.75"	9.818"	1.125"	0"
Invert 2	527.73'	270°	136.625"	6" PVC SDR35	6.25"	A-Lok 0200	7"	7.025"	2.75"	0"
Invert 3										
Invert 4										
Invert 5										
Invert 6										
Invert 7										
Invert 8										

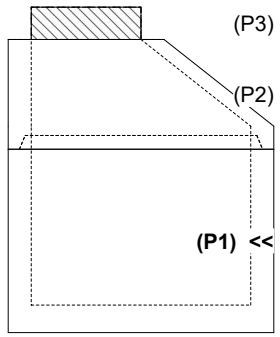

RIGHT-SIDE UP VIEW (int. dimensions)

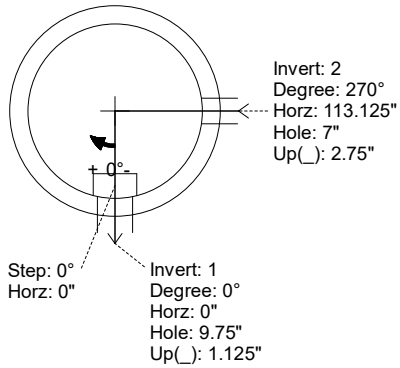

UPSIDE-DOWN VIEW (int. dimenions)

INVERT CHANNEL DRAWING

INSIDE WALL DIMENSIONS

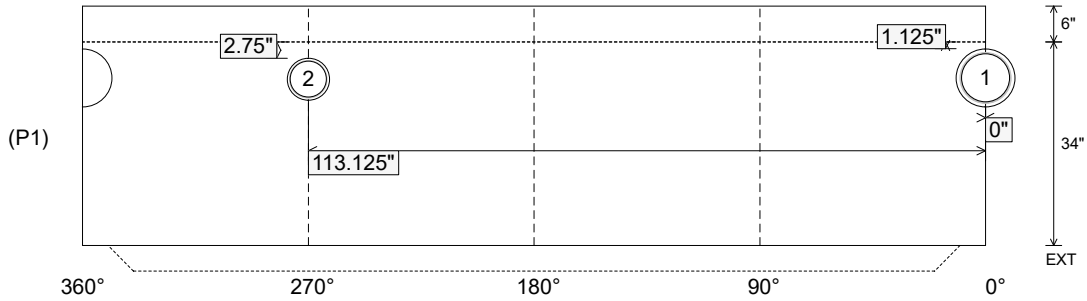

Coating (Int): Coating (Ext):	Seam Up: Tongue Seam Dn: n/a	Wall Thickness: 5" Floor Height: 6"	Height (Int): 34" Height (Ext): 40"	Weight (Net): 3658 lb Volume (Net): 0.93cu.yd

Job Name: 25-1401 Irwin Landing Ph. 1 Job Location: Murfreesboro, TN Contractor: Bear Construction LLC	Plant: Beaver Dam 6/9/2026 10:37:06 AM	Tech: S. Felletter PC: Erica Bradley	

Structure ID: R18

P1 MH048BA60 MH BASE T/n

P4) 28" x 28" - CASTING HEIGHT - 5"	0 lb
P3) 28" x 28" - GRADE RING F/F - 3"	290 lb
P2) 48" - MH FLAT TOP w/28"x28" Hole F/G - 12"	1368 lb
P1) 48" - MH BASE T/n - 60"	4822 lb
1) 48" - STORM INVERT CHANNEL - 1/4 HEIGHT	1075 lb
1) CASTING - JBS 3104-V SINGLE SET	250 lb
1) 48" - Conseal CS-102 1.00"	0 lb
2) 28" x 28" - Conseal CS-102 1.00"	0 lb
3) Hole - 26	0 lb
5) MH Step ML-10-TDS-NCR - 10"	0 lb
Structure Total:	7805 lb

Structure Notes: .
1. PER ASTM C478 SPECIFICATIONS.
2. CONCRETE = 4,000 PSI AT 28 DAYS.
3. CASTING BY ICAST (JBS-3104 SINGLE SET).
.
REINFORCING PER ASTM A615 (GRADE 60).
- TOP SLAB (As .62) #5 BARS AT 6" C.C.E.W..
- RISER/WALLS (As .12)
- FLOOR (As .31) #5 BARS AT 12" C.C.E.W.

Rim: 578.27' Rim to Invert: 6.46' Slack: 0.02" Sump: 2.5" Step Position: 270°

Position	Elev	Angle	Ext. (cw)	Pipe	Pipe OD	Connector	Hole	Horz Size	Up (_)	Offset
Invert 1	571.81'	0°	0"	18" RCP B WALL	23"	Hole 26	26"	27.476"	0"	0"
Invert 2	573.5'	90°	45.553"	18" RCP B WALL	23"	Hole 26	26"	27.476"	20.28"	0"
Invert 3	571.81'	180°	91.106"	18" RCP B WALL	23"	Hole 26	26"	27.476"	0"	0"
Invert 4										
Invert 5										
Invert 6										
Invert 7										
Invert 8										

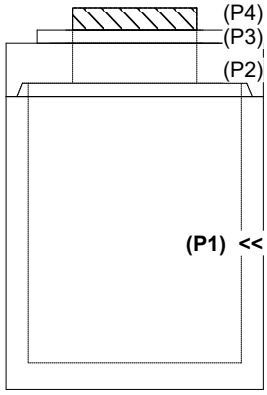

RIGHT-SIDE UP VIEW (int. dimensions)

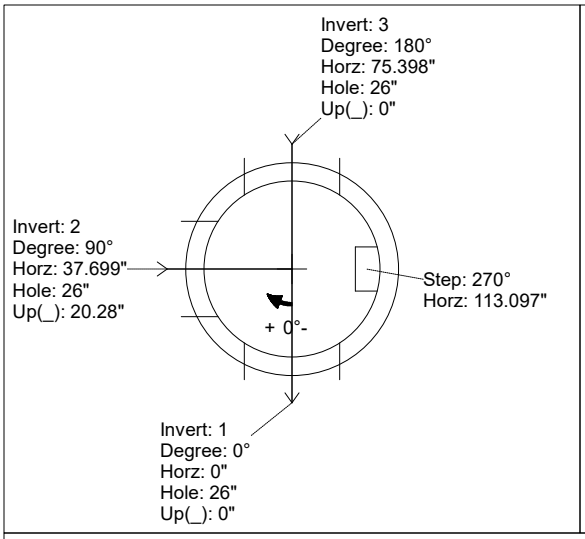

UPSIDE-DOWN VIEW (int. dimenions)

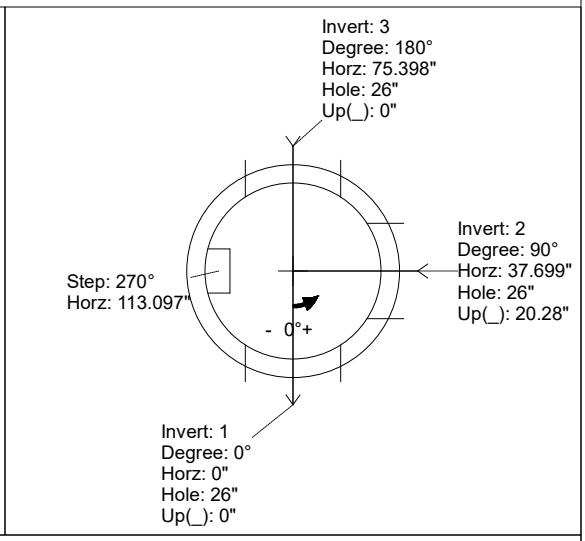

INSIDE WALL DIMENSIONS

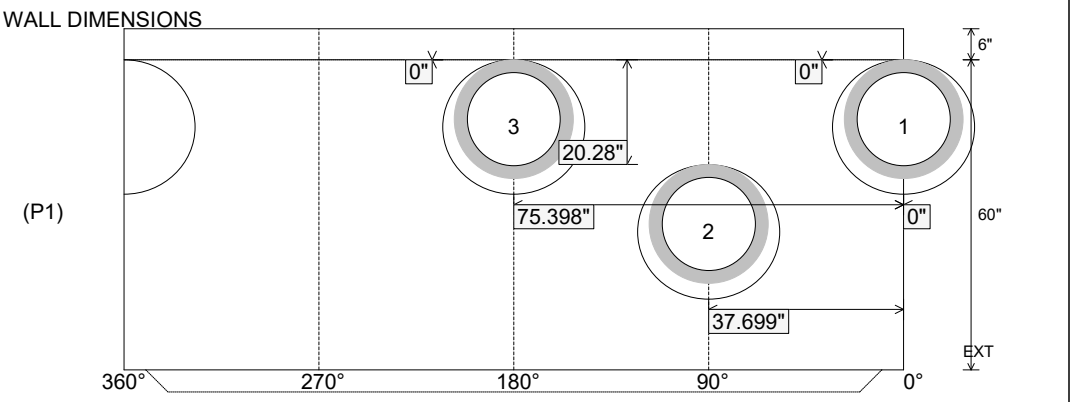

Coating (Int): Coating (Ext):	Seam Up: Tongue Seam Dn: n/a	Wall Thickness: 5" Floor Height: 6"	Height (Int): 60" Height (Ext): 66"	Weight (Net): 4822 lb Volume (Net): 1.23cu.yd

Job Name: 25-1401 Irwin Landing Ph. 1 Job Location: Murfreesboro, TN Contractor: Bear Construction LLC	Plant: Beaver Dam 6/9/2026 10:37:06 AM	Tech: S. Felletter PC: Erica Bradley	

Structure ID: R18

P1 MH048BA60 MH BASE T/n

P4) 28" x 28" - CASTING HEIGHT - 5"	0 lb
P3) 28" x 28" - GRADE RING F/F - 3"	290 lb
P2) 48" - MH FLAT TOP w/28"x28" Hole F/G - 12"	1368 lb
P1) 48" - MH BASE T/n - 60"	4822 lb
1) 48" - STORM INVERT CHANNEL - 1/4 HEIGHT	1075 lb
1) CASTING - JBS 3104-V SINGLE SET	250 lb
1) 48" - Conseal CS-102 1.00"	0 lb
2) 28" x 28" - Conseal CS-102 1.00"	0 lb
3) Hole - 26	0 lb
5) MH Step ML-10-TDS-NCR - 10"	0 lb
Structure Total:	7805 lb

Structure Notes: .
1. PER ASTM C478 SPECIFICATIONS.
2. CONCRETE = 4,000 PSI AT 28 DAYS.
3. CASTING BY ICAST (JBS-3104 SINGLE SET).
.
REINFORCING PER ASTM A615 (GRADE 60).
- TOP SLAB (As .62) #5 BARS AT 6" C.C.E.W..
- RISER/WALLS (As .12)
- FLOOR (As .31) #5 BARS AT 12" C.C.E.W.

Invert channel drawing
1/4 Height storm invert

Rim: 578.27' Rim to Invert: 6.46' Slack: 0.02" Sump: 2.5" Step Position: 270°

Position	Elev	Angle	Ext. (cw)	Pipe	Pipe OD	Connector	Hole	Horz Size	Up (_)	Offset
Invert 1	571.81'	0°	0"	18" RCP B WALL	23"	Hole 26	26"	27.476"	0"	0"
Invert 2	573.5'	90°	45.553"	18" RCP B WALL	23"	Hole 26	26"	27.476"	20.28"	0"
Invert 3	571.81'	180°	91.106"	18" RCP B WALL	23"	Hole 26	26"	27.476"	0"	0"
Invert 4										
Invert 5										
Invert 6										
Invert 7										
Invert 8										

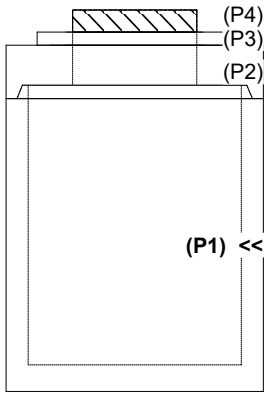

RIGHT-SIDE UP VIEW (int. dimensions)

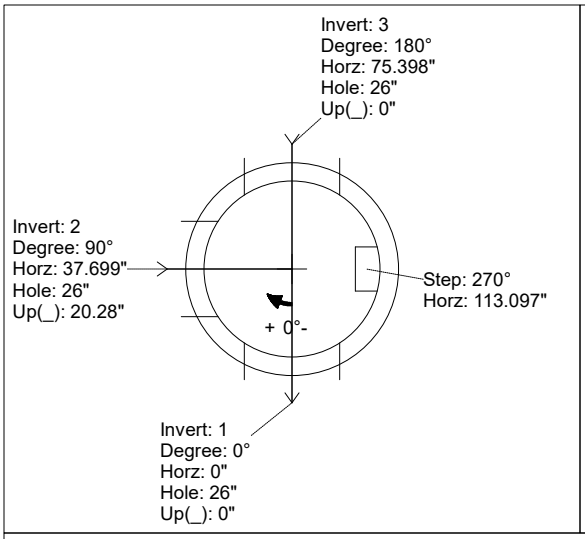

UPSIDE-DOWN VIEW (int. dimenions)

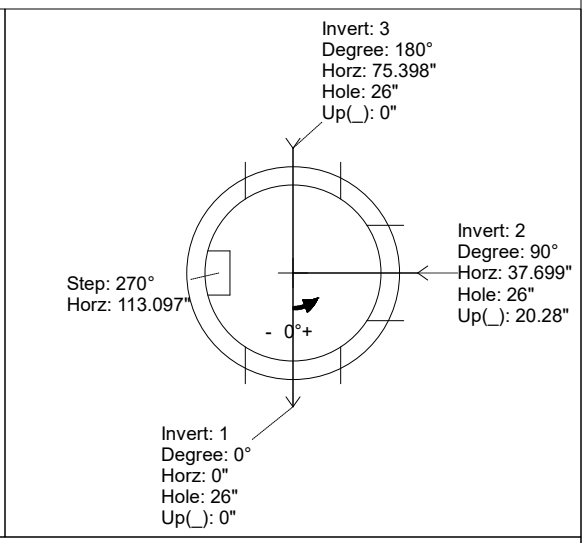

INSIDE WALL DIMENSIONS

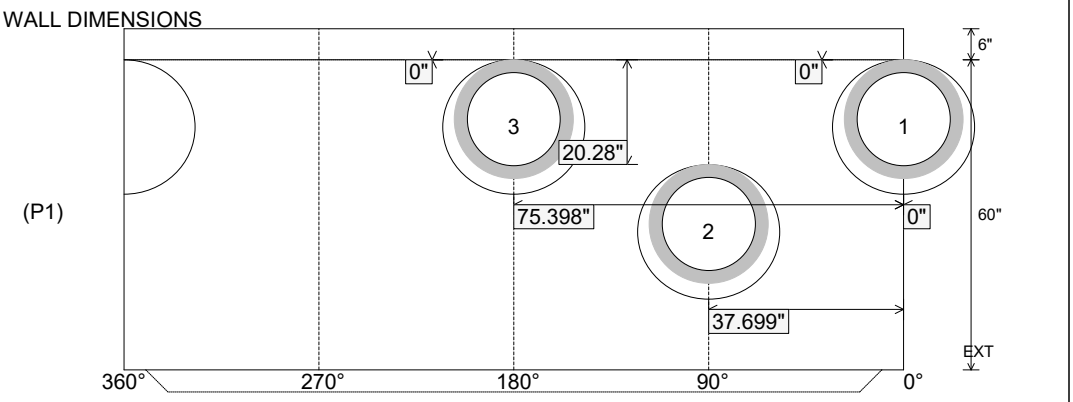

Coating (Int): Coating (Ext):	Seam Up: Tongue Seam Dn: n/a	Wall Thickness: 5" Floor Height: 6"	Height (Int): 60" Height (Ext): 66"	Weight (Net): 4822 lb Volume (Net): 1.23cu.yd

Job Name: 25-1401 Irwin Landing Ph. 1 Job Location: Murfreesboro, TN Contractor: Bear Construction LLC	Plant: Beaver Dam 6/9/2026 10:37:07 AM	Tech: S. Felletter PC: Erica Bradley	

Structure ID: R19

P1 MH048BA42 MH BASE T/n

P3) 28" x 28" - CASTING HEIGHT - 5"	0 lb
P2) 48" - MH FLAT TOP w/28"x28" Hole F/G - 12"	1368 lb
P1) 48" - MH BASE T/n - 42"	3565 lb
1) 48" - STORM INVERT CHANNEL - 1/4 HEIGHT	1075 lb
1) CASTING - JBS 3104-V SINGLE SET	250 lb
1) 48" - Conseal CS-102 1.00"	0 lb
1) 28" x 28" - Conseal CS-102 1.00"	0 lb
3) Hole - 26	0 lb
3) MH Step ML-10-TDS-NCR - 10"	0 lb
Structure Total:	6258 lb

Structure Notes: .
1. PER ASTM C478 SPECIFICATIONS.
2. CONCRETE = 4,000 PSI AT 28 DAYS.
3. CASTING BY ICAST (JBS-3104 SINGLE SET).
.
REINFORCING PER ASTM A615 (GRADE 60).
- TOP SLAB (As .62) #5 BARS AT 6" C.C.E.W..
- RISER/WALLS (As .12)
- FLOOR (As .31) #5 BARS AT 12" C.C.E.W.

Rim: 581.76' Rim to Invert: 4.72' Slack: 0.14" Sump: 2.5" Step Position: 270°

Position	Elev	Angle	Ext. (cw)	Pipe	Pipe OD	Connector	Hole	Horz Size	Up (_)	Offset
Invert 1	577.04'	0°	0"	18" RCP B WALL	23"	Hole 26	26"	27.476"	0"	0"
Invert 2	577.85'	90°	45.553"	18" RCP B WALL	23"	Hole 26	26"	27.476"	9.72"	0"
Invert 3	577.04'	180°	91.106"	18" RCP B WALL	23"	Hole 26	26"	27.476"	0"	0"
Invert 4										
Invert 5										
Invert 6										
Invert 7										
Invert 8										

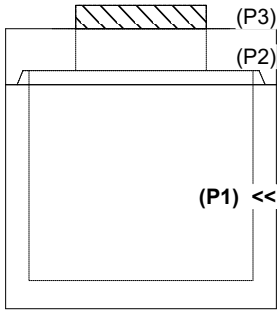

RIGHT-SIDE UP VIEW (int. dimensions)

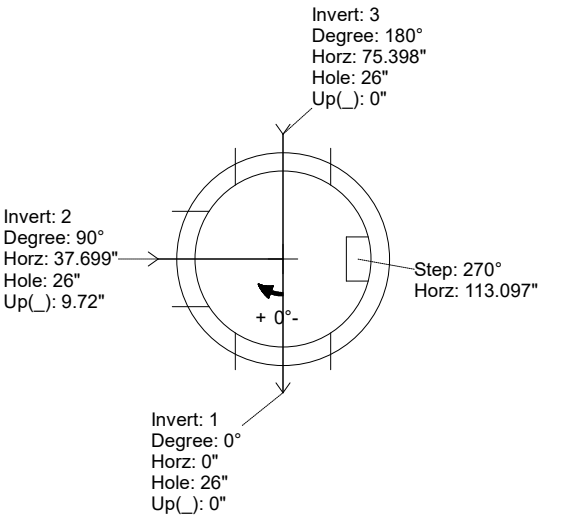

UPSIDE-DOWN VIEW (int. dimenions)

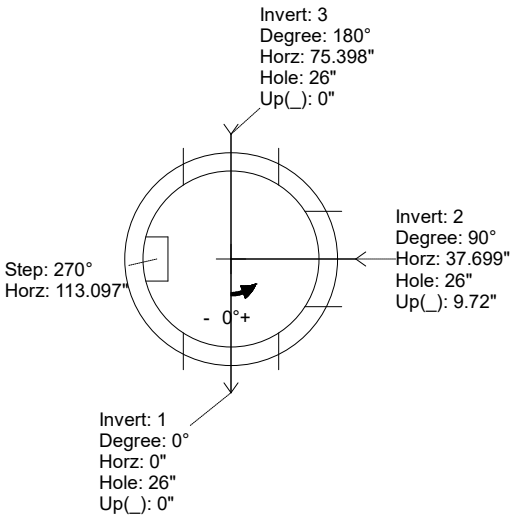

INSIDE WALL DIMENSIONS

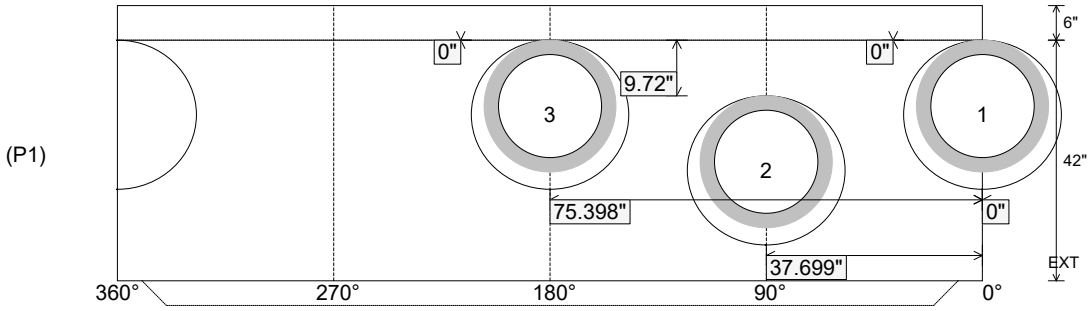

Coating (Int): Coating (Ext):	Seam Up: Tongue Seam Dn: n/a	Wall Thickness: 5" Floor Height: 6"	Height (Int): 42" Height (Ext): 48"	Weight (Net): 3565 lb Volume (Net): 0.91cu.yd

Job Name: 25-1401 Irwin Landing Ph. 1 Job Location: Murfreesboro, TN Contractor: Bear Construction LLC	Plant: Beaver Dam 6/9/2026 10:37:07 AM	Tech: S. Felletter PC: Erica Bradley	

Structure ID: R19

P1 MH048BA42 MH BASE T/n

P3) 28" x 28" - CASTING HEIGHT - 5"	0 lb
P2) 48" - MH FLAT TOP w/28"x28" Hole F/G - 12"	1368 lb
P1) 48" - MH BASE T/n - 42"	3565 lb
1) 48" - STORM INVERT CHANNEL - 1/4 HEIGHT	1075 lb
1) CASTING - JBS 3104-V SINGLE SET	250 lb
1) 48" - Conseal CS-102 1.00"	0 lb
1) 28" x 28" - Conseal CS-102 1.00"	0 lb
3) Hole - 26	0 lb
3) MH Step ML-10-TDS-NCR - 10"	0 lb
Structure Total:	6258 lb

Structure Notes: .
1. PER ASTM C478 SPECIFICATIONS.
2. CONCRETE = 4,000 PSI AT 28 DAYS.
3. CASTING BY ICAST (JBS-3104 SINGLE SET).
.
REINFORCING PER ASTM A615 (GRADE 60).
- TOP SLAB (As .62) #5 BARS AT 6" C.C.E.W..
- RISER/WALLS (As .12)
- FLOOR (As .31) #5 BARS AT 12" C.C.E.W.

Invert channel drawing
1/4 Height storm invert

Rim: 581.76' Rim to Invert: 4.72' Slack: 0.14" Sump: 2.5" Step Position: 270°

Position	Elev	Angle	Ext. (cw)	Pipe	Pipe OD	Connector	Hole	Horz Size	Up (_)	Offset
Invert 1	577.04'	0°	0"	18" RCP B WALL	23"	Hole 26	26"	27.476"	0"	0"
Invert 2	577.85'	90°	45.553"	18" RCP B WALL	23"	Hole 26	26"	27.476"	9.72"	0"
Invert 3	577.04'	180°	91.106"	18" RCP B WALL	23"	Hole 26	26"	27.476"	0"	0"
Invert 4										
Invert 5										
Invert 6										
Invert 7										
Invert 8										

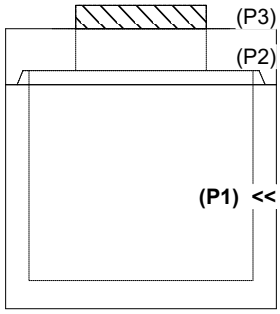

RIGHT-SIDE UP VIEW (int. dimensions)

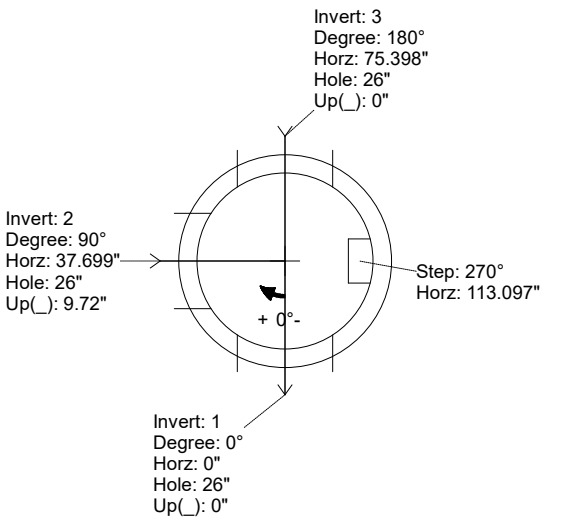

UPSIDE-DOWN VIEW (int. dimenions)

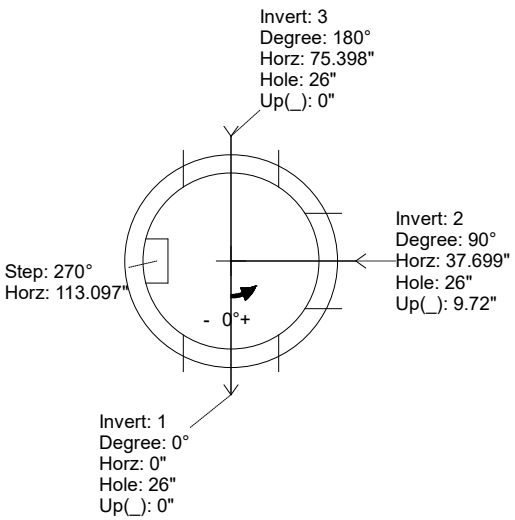

INSIDE WALL DIMENSIONS

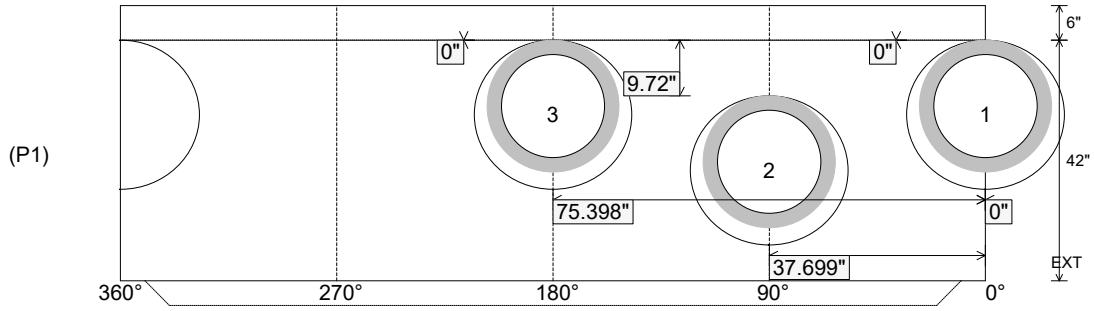

Coating (Int): Coating (Ext):	Seam Up: Tongue Seam Dn: n/a	Wall Thickness: 5" Floor Height: 6"	Height (Int): 42" Height (Ext): 48"	Weight (Net): 3565 lb Volume (Net): 0.91cu.yd

Job Name: 26-1899 - Gateway 65 Industrial Road Job Location: Franklin, KY Contractor: RD Sitework LLC	Plant: 100 6/4/2026 4:34:30 PM	Tech: Jared - F PC: E. Bardley	

Structure ID: 70 ST-CI

P1 MH048BA36 MH BASE T/n

P3) 24" x 36" - CASTING HEIGHT - 6"	0 lb
P2) 48" - MH FLAT TOP w/24"x36" Hole F/G - 12"	1300 lb
P1) 48" - MH BASE T/n - 36"	3680 lb
1) CASTING - HOE 525 SET FLAT GRATE (F/G/H)	442 lb
1) 48" - Conseal CS-102 1.00"	0 lb
1) 24" x 36" - Conseal CS-102 1.00"	0 lb
1) Hole - 22	0 lb
Structure Total:	5422 lb

Structure Notes: .
1. PER ASTM C478 SPECIFICATIONS.
2. CONCRETE = 4,000 PSI AT 28 DAYS.
3. NO STEPS AND NO INVERT CHANNEL.
4. CASTING BY ICAST (HOE 525 SET FLAT GRATE (F/G/H)).
5. CITY OF BGKY-CBI TYPE F.

.
REINFORCING PER ASTM A615 (GRADE 60).
- TOP SLAB (As .62) #5 BARS AT 6" C.C.E.W..
- RISER/WALLS (As .12)
- FLOOR (As .31) #5 BARS AT 12" C.C.E.W.

Rim: 708.26' Rim to Invert: 4.54' Slack: 0.48" Sump: 0" Step Position:

Position	Elev	Angle	Ext. (cw)	Pipe	Pipe OD	Connector	Hole	Horz Size	Up (_)	Offset
Invert 1	703.72'	0°	0"	15" RCP B WALL	19.5"	Hole 22	22"	22.854"	-2.25"	0"
Invert 2										
Invert 3										
Invert 4										
Invert 5										
Invert 6										
Invert 7										
Invert 8										

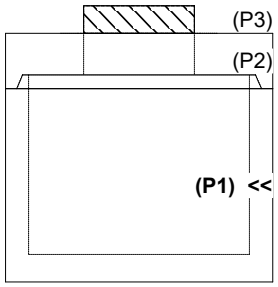

RIGHT-SIDE UP VIEW (int. dimensions)

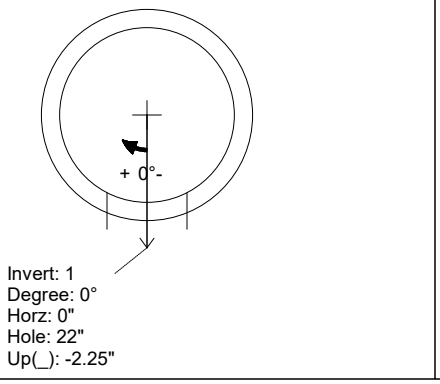

UPSIDE-DOWN VIEW (int. dimenions)

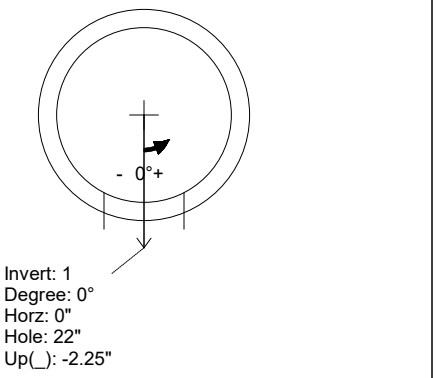

INSIDE WALL DIMENSIONS

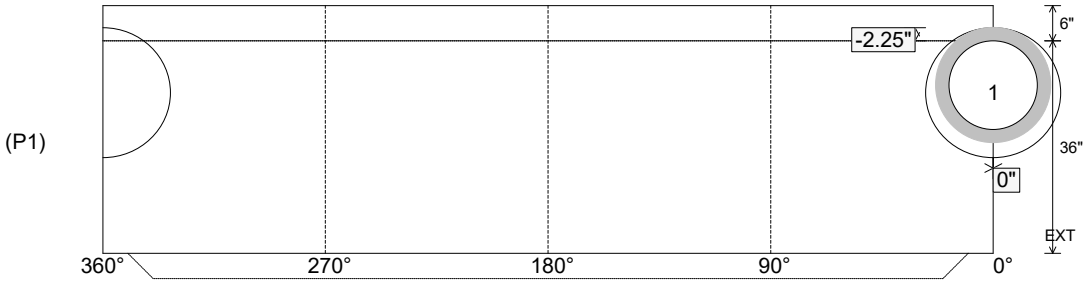

Coating (Int): Coating (Ext):	Seam Up: Tongue Seam Dn: n/a	Wall Thickness: 5" Floor Height: 6"	Height (Int): 36" Height (Ext): 42"	Weight (Net): 3680 lb Volume (Net): 0.94cu.yd

Job Name: 26-1899 - Gateway 65 Industrial Road Job Location: Franklin, KY Contractor: RD Sitework LLC	Plant: 100 6/4/2026 4:34:25 PM	Tech: Jared - F PC: E. Bardley	

Structure ID: 63 ST-CI

P1 MH048BA42 MH BASE T/n

P3) 24" x 36" - CASTING HEIGHT - 6"	0 lb
P2) 48" - MH FLAT TOP w/24"x36" Hole F/G - 12"	1300 lb
P1) 48" - MH BASE T/n - 42"	3633 lb
1) CASTING - HOE 525 SET FLAT GRATE (F/G/H)	442 lb
1) 48" - Conseal CS-102 1.00"	0 lb
1) 24" x 36" - Conseal CS-102 1.00"	0 lb
2) Hole - 26	0 lb
1) Hole - 22	0 lb
Structure Total:	5375 lb

Structure Notes: .
1. PER ASTM C478 SPECIFICATIONS.
2. CONCRETE = 4,000 PSI AT 28 DAYS.
3. NO STEPS AND NO INVERT CHANNEL.
4. CASTING BY ICAST (HOE 525 SET FLAT GRATE (F/G/H)).
5. CITY OF BGKY-CBI TYPE F.

.
REINFORCING PER ASTM A615 (GRADE 60).
- TOP SLAB (As .62) #5 BARS AT 6" C.C.E.W..
- RISER/WALLS (As .12)
- FLOOR (As .31) #5 BARS AT 12" C.C.E.W.

Rim: 708.26' Rim to Invert: 5' Slack: 0" Sump: 0" Step Position:

Position	Elev	Angle	Ext. (cw)	Pipe	Pipe OD	Connector	Hole	Horz Size	Up (_)	Offset
Invert 1	703.26'	0°	0"	18" RCP B WALL	23"	Hole 26	26"	27.476"	-2.5"	0"
Invert 2	703.26'	180°	91.125"	18" RCP B WALL	23"	Hole 26	26"	27.476"	-2.5"	0"
Invert 3	703.26'	270°	136.625"	15" RCP B WALL	19.5"	Hole 22	22"	22.854"	-2.25"	0"
Invert 4										
Invert 5										
Invert 6										
Invert 7										
Invert 8										

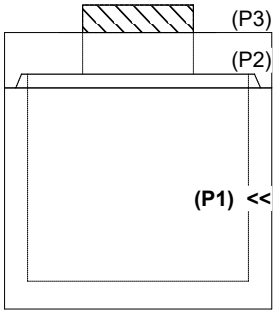

RIGHT-SIDE UP VIEW (int. dimensions)

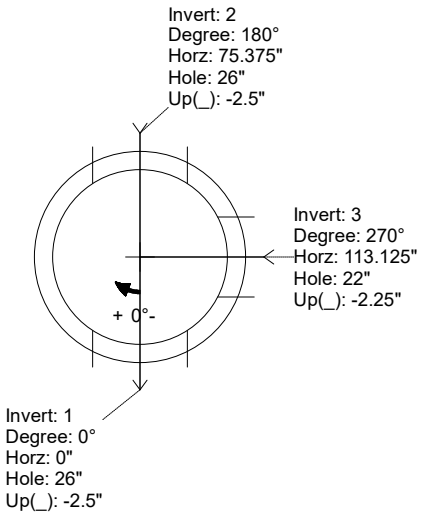

UPSIDE-DOWN VIEW (int. dimenions)

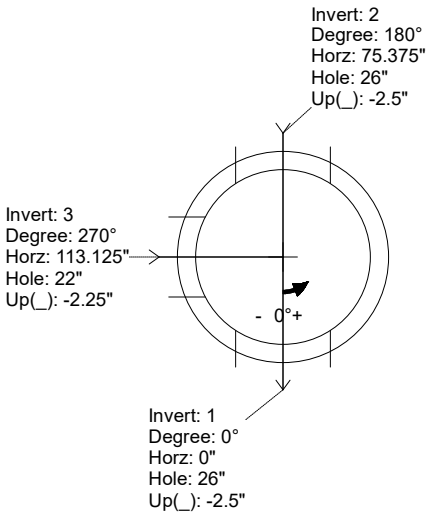

INSIDE WALL DIMENSIONS

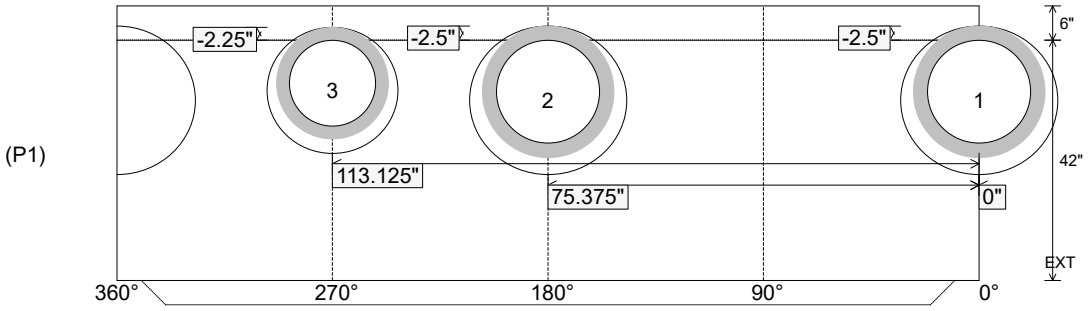

Coating (Int): Coating (Ext):	Seam Up: Tongue Seam Dn: n/a	Wall Thickness: 5" Floor Height: 6"	Height (Int): 42" Height (Ext): 48"	Weight (Net): 3633 lb Volume (Net): 0.93cu.yd

Job Name: 26-1899 - Gateway 65 Industrial Road Job Location: Franklin, KY Contractor: RD Sitework LLC	Plant: 100 6/4/2026 4:34:25 PM	Tech: Jared - F PC: E. Bardley	

Structure ID: 62 ST-CI

P1 MH048BA42 MH BASE T/n

P3) 24" x 36" - CASTING HEIGHT - 6"	0 lb
P2) 48" - MH FLAT TOP w/24"x36" Hole F/G - 12"	1300 lb
P1) 48" - MH BASE T/n - 42"	3798 lb
1) CASTING - HOE 525 SET FLAT GRATE (F/G/H)	442 lb
1) 48" - Conseal CS-102 1.00"	0 lb
1) 24" x 36" - Conseal CS-102 1.00"	0 lb
2) Hole - 26	0 lb
Structure Total:	5540 lb

Structure Notes: .
1. PER ASTM C478 SPECIFICATIONS.
2. CONCRETE = 4,000 PSI AT 28 DAYS.
3. NO STEPS AND NO INVERT CHANNEL.
4. CASTING BY ICAST (HOE 525 SET FLAT GRATE (F/G/H)).
5. CITY OF BGKY-CBI TYPE F.

.
REINFORCING PER ASTM A615 (GRADE 60).
- TOP SLAB (As .62) #5 BARS AT 6" C.C.E.W..
- RISER/WALLS (As .12)
- FLOOR (As .31) #5 BARS AT 12" C.C.E.W.

Rim: 707.58' Rim to Invert: 5' Slack: 0" Sump: 0" Step Position:

Position	Elev	Angle	Ext. (cw)	Pipe	Pipe OD	Connector	Hole	Horz Size	Up (_)	Offset
Invert 1	702.58'	0°	0"	18" RCP B WALL	23"	Hole 26	26"	27.476"	-2.5"	0"
Invert 2	702.58'	180°	91.125"	18" RCP B WALL	23"	Hole 26	26"	27.476"	-2.5"	0"
Invert 3										
Invert 4										
Invert 5										
Invert 6										
Invert 7										
Invert 8										

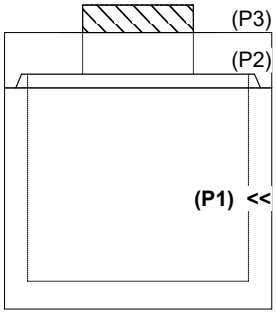

RIGHT-SIDE UP VIEW (int. dimensions)

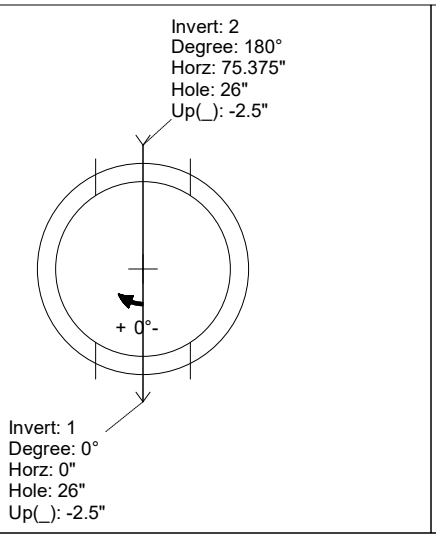

UPSIDE-DOWN VIEW (int. dimenions)

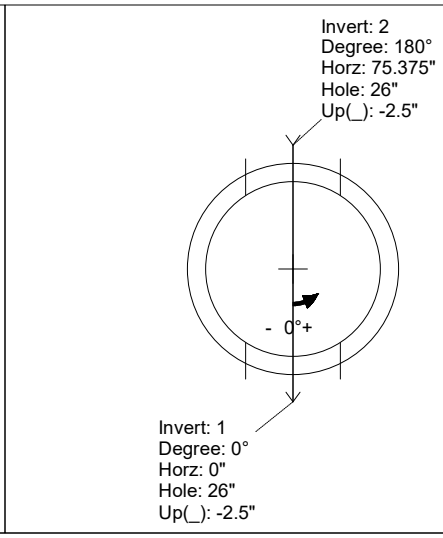

INSIDE WALL DIMENSIONS

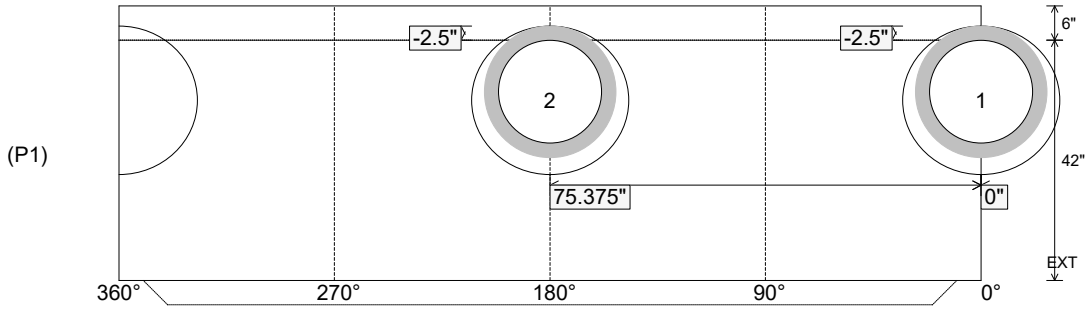

Coating (Int): Coating (Ext):	Seam Up: Tongue Seam Dn: n/a	Wall Thickness: 5" Floor Height: 6"	Height (Int): 42" Height (Ext): 48"	Weight (Net): 3798 lb Volume (Net): 0.97cu.yd

Job Name: 26-1899 - Gateway 65 Industrial Road Job Location: Franklin, KY Contractor: RD Sitework LLC	Plant: 100 6/4/2026 4:34:24 PM	Tech: Jared - F PC: E. Bardley	

Structure ID: 61 ST-CI

P1 MH048BA42 MH BASE T/n

P3) 24" x 36" - CASTING HEIGHT - 6"	0 lb
P2) 48" - MH FLAT TOP w/24"x36" Hole F/G - 12"	1300 lb
P1) 48" - MH BASE T/n - 42"	3798 lb
1) CASTING - HOE 525 SET FLAT GRATE (F/G/H)	442 lb
1) 48" - Conseal CS-102 1.00"	0 lb
1) 24" x 36" - Conseal CS-102 1.00"	0 lb
2) Hole - 26	0 lb
Structure Total:	5540 lb

Structure Notes: .
1. PER ASTM C478 SPECIFICATIONS.
2. CONCRETE = 4,000 PSI AT 28 DAYS.
3. NO STEPS AND NO INVERT CHANNEL.
4. CASTING BY ICAST (HOE 525 SET FLAT GRATE (F/G/H)).
5. CITY OF BGKY-CBI TYPE F.

.
REINFORCING PER ASTM A615 (GRADE 60).
- TOP SLAB (As .62) #5 BARS AT 6" C.C.E.W..
- RISER/WALLS (As .12)
- FLOOR (As .31) #5 BARS AT 12" C.C.E.W.

Rim: 706.93' Rim to Invert: 5' Slack: 0" Sump: 0" Step Position:

Position	Elev	Angle	Ext. (cw)	Pipe	Pipe OD	Connector	Hole	Horz Size	Up (_)	Offset
Invert 1	701.93'	0°	0"	18" RCP B WALL	23"	Hole 26	26"	27.476"	-2.5"	0"
Invert 2	701.93'	180°	91.125"	18" RCP B WALL	23"	Hole 26	26"	27.476"	-2.5"	0"
Invert 3										
Invert 4										
Invert 5										
Invert 6										
Invert 7										
Invert 8										

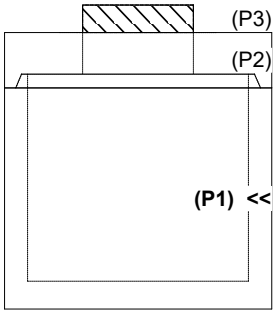

RIGHT-SIDE UP VIEW (int. dimensions)

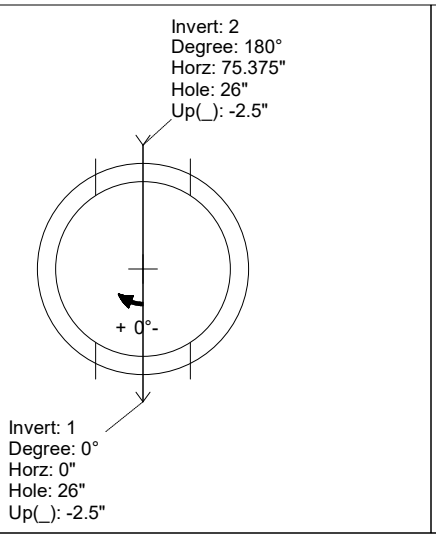

UPSIDE-DOWN VIEW (int. dimenions)

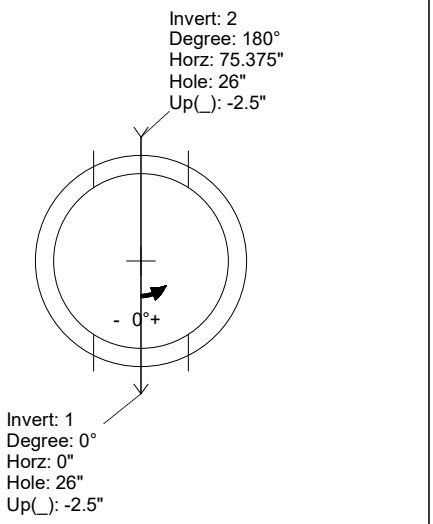

INSIDE WALL DIMENSIONS

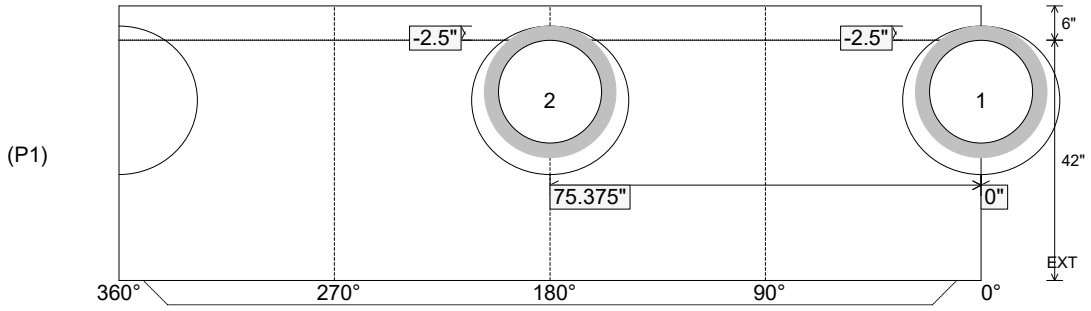

Coating (Int): Coating (Ext):	Seam Up: Tongue Seam Dn: n/a	Wall Thickness: 5" Floor Height: 6"	Height (Int): 42" Height (Ext): 48"	Weight (Net): 3798 lb Volume (Net): 0.97cu.yd

Job Name: 26-1899 - Gateway 65 Industrial Road Job Location: Franklin, KY Contractor: RD Sitework LLC	Plant: 100 6/4/2026 4:34:24 PM	Tech: Jared - F PC: E. Bardley	

Structure ID: 60 ST-CI

P1 MH048BAVF **MH BASE Custom Ht T/n**

P3) 24" x 36" - CASTING HEIGHT - 6"	0 lb
P2) 48" - MH FLAT TOP w/24"x36" Hole F/G - 12"	1300 lb
P1) 48" - MH BASE Custom Ht T/n - 34"	3541 lb
1) CASTING - HOE 525 SET FLAT GRATE (F/G/H)	442 lb
1) 48" - Conseal CS-102 1.00"	0 lb
1) 24" x 36" - Conseal CS-102 1.00"	0 lb
1) Hole - 22	0 lb
Structure Total:	5283 lb

Structure Notes: .
1. PER ASTM C478 SPECIFICATIONS.
2. CONCRETE = 4,000 PSI AT 28 DAYS.
3. NO STEPS AND NO INVERT CHANNEL.
4. CASTING BY ICAST (HOE 525 SET FLAT GRATE (F/G/H)).
5. CITY OF BGKY-CBI TYPE F.

.
REINFORCING PER ASTM A615 (GRADE 60).
- TOP SLAB (As .62) #5 BARS AT 6" C.C.E.W..
- RISER/WALLS (As .12)
- FLOOR (As .31) #5 BARS AT 12" C.C.E.W.

Rim: 706.42' Rim to Invert: 4.35' Slack: 0.2" Sump: 0" Step Position:

Position	Elev	Angle	Ext. (cw)	Pipe	Pipe OD	Connector	Hole	Horz Size	Up (_)	Offset
Invert 1	702.07'	0°	0"	15" RCP B WALL	19.5"	Hole 22	22"	22.854"	-2.25"	0"
Invert 2										
Invert 3										
Invert 4										
Invert 5										
Invert 6										
Invert 7										
Invert 8										

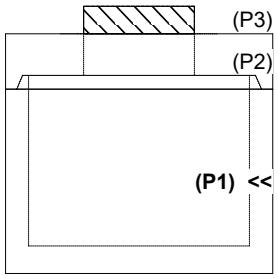

RIGHT-SIDE UP VIEW (int. dimensions)

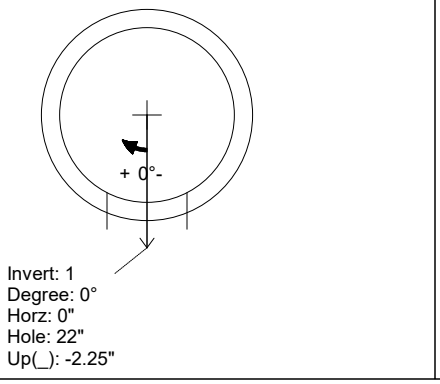

UPSIDE-DOWN VIEW (int. dimenions)

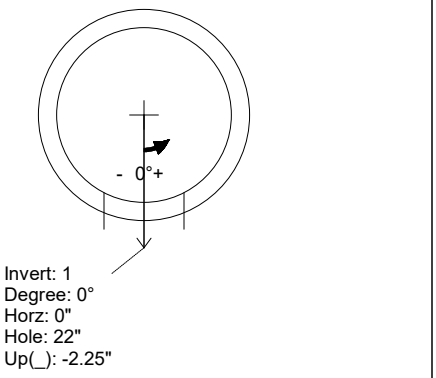

INSIDE WALL DIMENSIONS

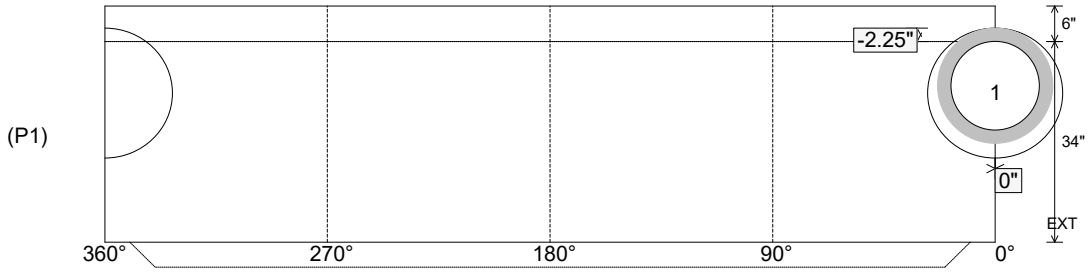

Coating (Int): Coating (Ext):	Seam Up: Tongue Seam Dn: n/a	Wall Thickness: 5" Floor Height: 6"	Height (Int): 34" Height (Ext): 40"	Weight (Net): 3541 lb Volume (Net): 0.9cu.yd

Job Name: 26-1899 - Gateway 65 Industrial Road Job Location: Franklin, KY Contractor: RD Sitework LLC	Plant: 100 6/4/2026 4:34:22 PM	Tech: Jared - F PC: E. Bardley	

Structure ID: 56 ST-CI

P1 MH048BAVF **MH BASE Custom Ht T/n**

P3) 24" x 36" - CASTING HEIGHT - 6"	0 lb
P2) 48" - MH FLAT TOP w/24"x36" Hole F/G - 12"	1300 lb
P1) 48" - MH BASE Custom Ht T/n - 32"	3236 lb
1) CASTING - HOE 525 SET FLAT GRATE (F/G/H)	442 lb
1) 48" - Conseal CS-102 1.00"	0 lb
1) 24" x 36" - Conseal CS-102 1.00"	0 lb
2) Hole - 22	0 lb
Structure Total:	4978 lb

Structure Notes: .
1. PER ASTM C478 SPECIFICATIONS.
2. CONCRETE = 4,000 PSI AT 28 DAYS.
3. NO STEPS AND NO INVERT CHANNEL.
4. CASTING BY ICAST (HOE 525 SET FLAT GRATE (F/G/H)).
5. CITY OF BGKY-CBI TYPE F.

.
REINFORCING PER ASTM A615 (GRADE 60).
- TOP SLAB (As .62) #5 BARS AT 6" C.C.E.W..
- RISER/WALLS (As .12)
- FLOOR (As .31) #5 BARS AT 12" C.C.E.W.

Rim: 704.85' Rim to Invert: 4.2' Slack: 0.4" Sump: 0" Step Position:

Position	Elev	Angle	Ext. (cw)	Pipe	Pipe OD	Connector	Hole	Horz Size	Up (_)	Offset
Invert 1	700.65'	0°	0"	15" RCP B WALL	19.5"	Hole 22	22"	22.854"	-2.25"	0"
Invert 2	700.65'	180°	91.125"	15" RCP B WALL	19.5"	Hole 22	22"	22.854"	-2.25"	0"
Invert 3										
Invert 4										
Invert 5										
Invert 6										
Invert 7										
Invert 8										

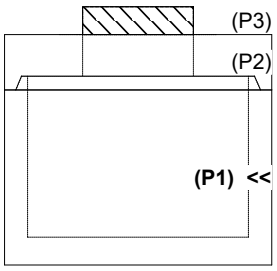

RIGHT-SIDE UP VIEW (int. dimensions)

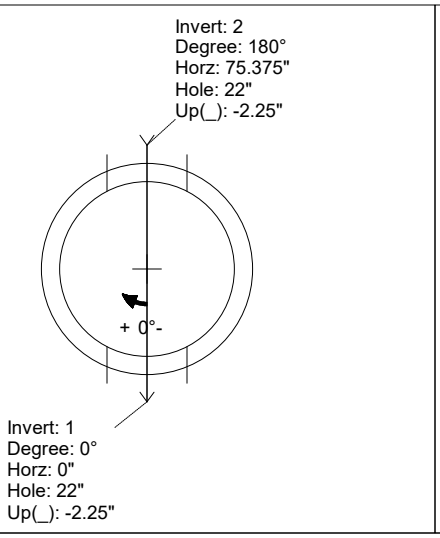

UPSIDE-DOWN VIEW (int. dimenions)

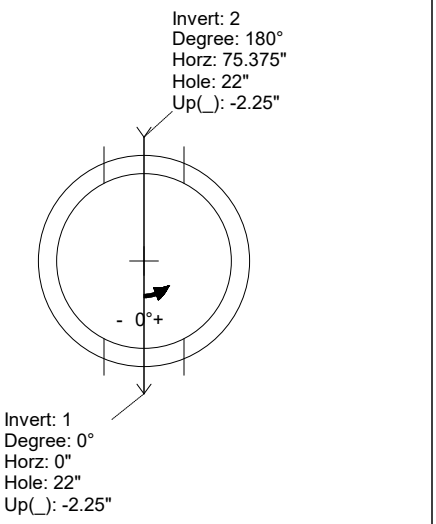

INSIDE WALL DIMENSIONS

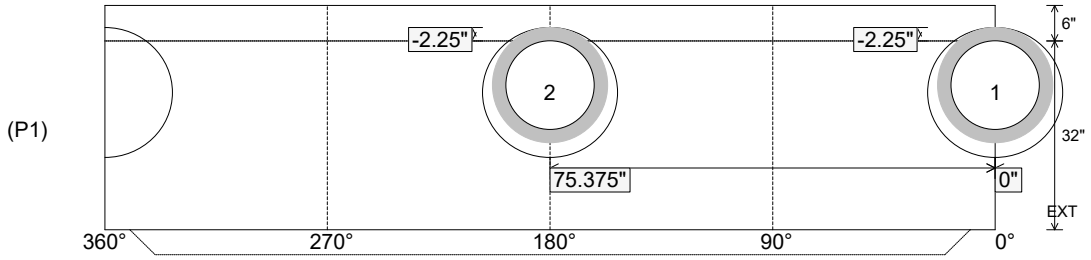

Coating (Int): Coating (Ext):	Seam Up: Tongue Seam Dn: n/a	Wall Thickness: 5" Floor Height: 6"	Height (Int): 32" Height (Ext): 38"	Weight (Net): 3236 lb Volume (Net): 0.83cu.yd

Job Name: 25-4547 - WWTP Improvements & Hydraulic Expansion Job Location: Shepherdsville, KY Contractor: Pace Contracting, LLC	Plant: 100 5/29/2026 3:21:11 PM	Tech: Jared - F PC: J Jarvis	

Structure ID: MH-6

P1 MH048BA24 MH BASE T/n

P3) 24" - CASTING HEIGHT - 7"	0 lb
P2) 48" - ECC CONE w/ 24" HOLE F/G - 24"	1550 lb
P1) 48" - MH BASE T/n - 24"	2842 lb
1) Chimney Seal - Cretex Chimney Seal	10 lb
1) 48" - MH INVERT CHANNEL - FULL HEIGHT	1440 lb
1) JOINT WRAP - 0.065"x6"x50' CONSEAL CS212	0 lb
1) JOINT WRAP PRIMER - CONSEAL CS-75 (1 gal.)	0 lb
1) CASTING - HOE MC-375-WT F/C Sanitary	271 lb
1) 48" - Conseal CS-102 1.00" (Double)	0 lb
1) 24" - Conseal CS-102 1.00" (Double)	0 lb
1) PSX - 12M NYLO	8 lb
2) PSX - 12-06 NYLO	16 lb
1) PSX - 8QRS-S NYLO	6 lb
3) MH Step ML-10-TDS-NCR - 10"	0 lb
Structure Total:	6144 lb

Rim: 446.9' Rim to Invert: 4.5' Slack: 1" Sump: 2" Step Position: 270°

Structure Notes: .
1. PER ASTM C478 SPECIFICATIONS.
2. CONCRETE = 4,000 PSI AT 28 DAYS.
3. CASTING SUPPLIED BY I-CAST (HOE MC-375-WT F/C SANITARY).
4. 8.5" EXTERNAL CHIMNEY SEAL BY I-CAST.
.
REINFORCING PER ASTM A615 (GRADE 60).
- CONE (As.12)
- RISER/WALLS (As .12)
- FLOOR (As .31) #5 BARS AT 12" C.C.E.W.

Position	Elev	Angle	Ext. (cw)	Pipe	Pipe OD	Connector	Hole	Horz Size	Up (_)	Offset
Invert 1	442.4'	0°	0"	8" DI	9"	PSX 12M NYLO	12"	12.129"	0"	0"
Invert 2	442.5'	90°	45.5"	6" DI	6.875"	PSX 12-06 NYLO	12"	12.129"	0.25"	0"
Invert 3	442.5'	177°	89.625"	6" DI	6.875"	PSX 12-06 NYLO	12"	12.129"	0.25"	0"
Invert 4	442.75'	318°	161"	4" DI	4.75"	PSX 8QRS-S NYLO	8"	8.038"	4.25"	0"
Invert 5										
Invert 6										
Invert 7										
Invert 8										

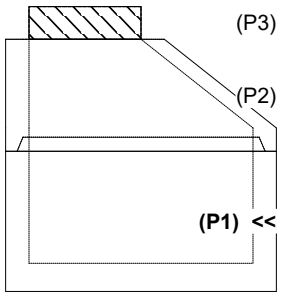

RIGHT-SIDE UP VIEW (int. dimensions)

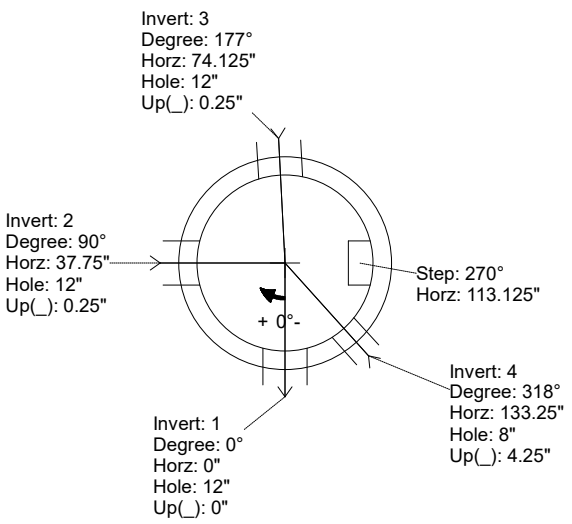

UPSIDE-DOWN VIEW (int. dimenions)

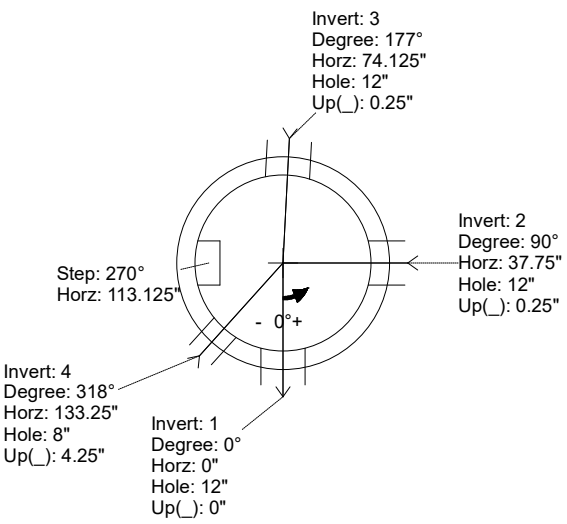

INSIDE WALL DIMENSIONS

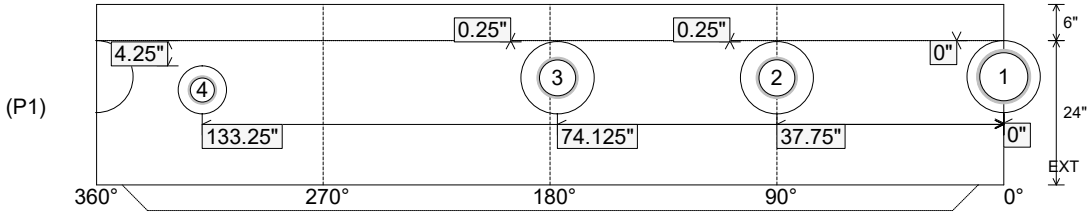

Coating (Int): Coating (Ext):	Seam Up: Tongue Seam Dn: n/a	Wall Thickness: 5" Floor Height: 6"	Height (Int): 24" Height (Ext): 30"	Weight (Net): 2842 lb Volume (Net): 0.73cu.yd

Job Name: 25-4547 - WWTP Improvements & Hydraulic Expansion Job Location: Shepherdsville, KY Contractor: Pace Contracting, LLC	Plant: 100 5/29/2026 3:21:11 PM	Tech: Jared - F PC: J Jarvis	

Structure ID: MH-6

P1 MH048BA24 MH BASE T/n

P3) 24" - CASTING HEIGHT - 7"	0 lb
P2) 48" - ECC CONE w/ 24" HOLE F/G - 24"	1550 lb
P1) 48" - MH BASE T/n - 24"	2842 lb
1) Chimney Seal - Cretex Chimney Seal	10 lb
1) 48" - MH INVERT CHANNEL - FULL HEIGHT	1440 lb
1) JOINT WRAP - 0.065"x6"x50' CONSEAL CS212	0 lb
1) JOINT WRAP PRIMER - CONSEAL CS-75 (1 gal.)	0 lb
1) CASTING - HOE MC-375-WT F/C Sanitary	271 lb
1) 48" - Conseal CS-102 1.00" (Double)	0 lb
1) 24" - Conseal CS-102 1.00" (Double)	0 lb
1) PSX - 12M NYLO	8 lb
2) PSX - 12-06 NYLO	16 lb
1) PSX - 8QRS-S NYLO	6 lb
3) MH Step ML-10-TDS-NCR - 10"	0 lb
Structure Total:	6144 lb

Rim: 446.9' Rim to Invert: 4.5' Slack: 1" Sump: 2" Step Position: 270°

Structure Notes: .
1. PER ASTM C478 SPECIFICATIONS.
2. CONCRETE = 4,000 PSI AT 28 DAYS.
3. CASTING SUPPLIED BY I-CAST (HOE MC-375-WT F/C SANITARY).
4. 8.5" EXTERNAL CHIMNEY SEAL BY I-CAST.
.
REINFORCING PER ASTM A615 (GRADE 60).
- CONE (As.12)
- RISER/WALLS (As .12)
- FLOOR (As .31) #5 BARS AT 12" C.C.E.W.

Position	Elev	Angle	Ext. (cw)	Pipe	Pipe OD	Connector	Hole	Horz Size	Up (_)	Offset
Invert 1	442.4'	0°	0"	8" DI	9"	PSX 12M NYLO	12"	12.129"	0"	0"
Invert 2	442.5'	90°	45.5"	6" DI	6.875"	PSX 12-06 NYLO	12"	12.129"	0.25"	0"
Invert 3	442.5'	177°	89.625"	6" DI	6.875"	PSX 12-06 NYLO	12"	12.129"	0.25"	0"
Invert 4	442.75'	318°	161"	4" DI	4.75"	PSX 8QRS-S NYLO	8"	8.038"	4.25"	0"
Invert 5										
Invert 6										
Invert 7										
Invert 8										

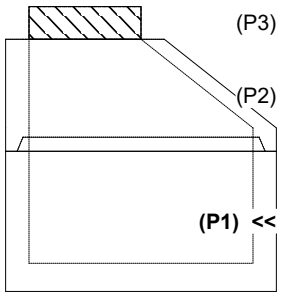

RIGHT-SIDE UP VIEW (int. dimensions)

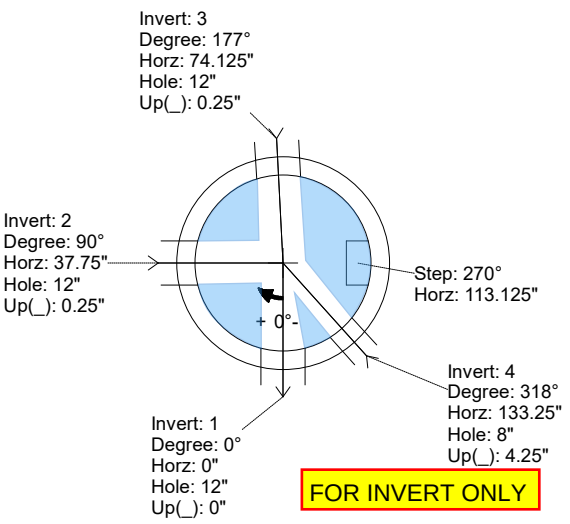

UPSIDE-DOWN VIEW (int. dimenions)

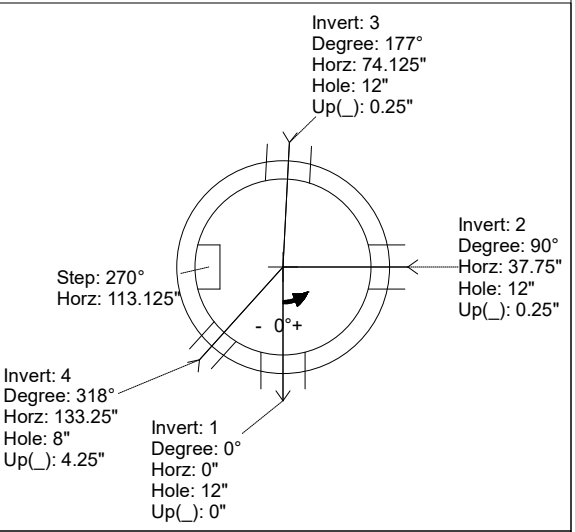

INSIDE WALL DIMENSIONS

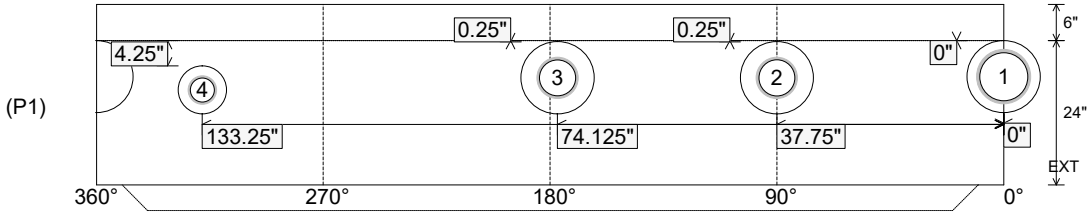

Coating (Int): Coating (Ext):	Seam Up: Tongue Seam Dn: n/a	Wall Thickness: 5" Floor Height: 6"	Height (Int): 24" Height (Ext): 30"	Weight (Net): 2842 lb Volume (Net): 0.73cu.yd

Job Name: 26-1355 Sinking Creek Rd Sanitary Sewer Ext. Ph. 2 Job Location: London, KY Contractor: Endesol, Inc.	Plant: Beaver Dam 6/2/2026 2:57:49 PM	Tech: S. Felletter PC: E. Bradley	

Structure ID: B-4-7 SS-MH

P1 MH048BA30CDARED MH BASE w/ConBlock-CDA Red T/n

P4) 24" - CASTING HEIGHT - 7"	0 lb
P3) 48" - ECC CONE w/ 24" HOLE, w/ConBlock-CDA Red F/G - 30"	1961 lb
P2) 48" - MH RISER w/ConBlock-CDA Red T/G - 36"	2515 lb
P1) 48" - MH BASE w/ConBlock-CDA Red T/n - 30"	3330 lb
1) JOINT WRAP - 0.065"x6"x50' CONSEAL CS212	0 lb
1) JOINT WRAP PRIMER - CONSEAL CS-75 (1 gal.)	0 lb
1) 48" - MH INVERT CHANNEL w/XYPEX - FULL HEIGHT	1440 lb
1) CASTING - HOE MC-350 F/C Sanitary	305 lb
2) 48" - Conseal CS-102 1.00" (Double)	0 lb
1) 24" - Conseal CS-102 1.00" (Double)	0 lb
2) PSX - 12-08 NYLO	16 lb
8) MH Step ML-10-TDS-NCR - 10"	0 lb
Structure Total:	9568 lb

Rim: 1232.5' Rim to Invert: 8.6' Slack: 2.2" Sump: 2" Step Position: 0°

Structure Notes: .
1. PER ASTM C478 SPECIFICATIONS.
2. CONCRETE = 4,000 PSI AT 28 DAYS.
3. ADMIXTURE = CONBLOCK CDA RED.
4. CASTING BY ICAST (HOE MC-350 F/C "SANITARY").
.
REINFORCING PER ASTM A615 (GRADE 60).
- CONE (As .12)
- RISER/WALLS (As .12)
- FLOOR (As .31) #5 BARS AT 12" C.C.E.W.

Position	Elev	Angle	Ext. (cw)	Pipe	Pipe OD	Connector	Hole	Horz Size	Up (_)	Offset
Invert 1	1223.9'	0°	0"	8" PVC SDR35	8.5"	PSX 12-08 NYLO	12"	12.129"	0"	0"
Invert 2	1224'	98°	49.602"	8" PVC SDR35	8.5"	PSX 12-08 NYLO	12"	12.129"	1.2"	0"
Invert 3										
Invert 4										
Invert 5										
Invert 6										
Invert 7										
Invert 8										

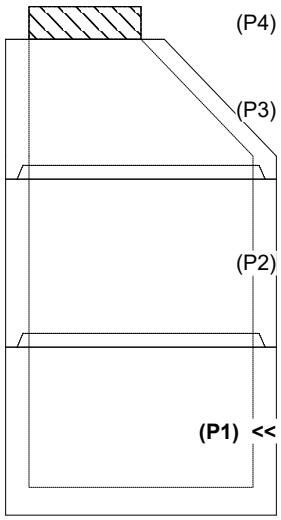

RIGHT-SIDE UP VIEW (int. dimensions)

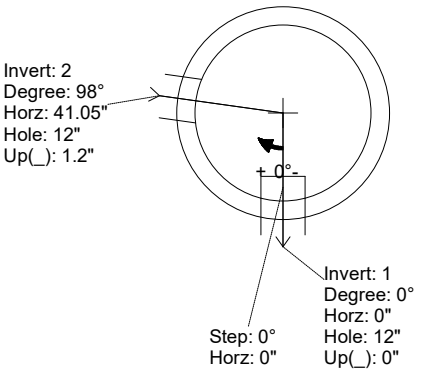

UPSIDE-DOWN VIEW (int. dimenions)

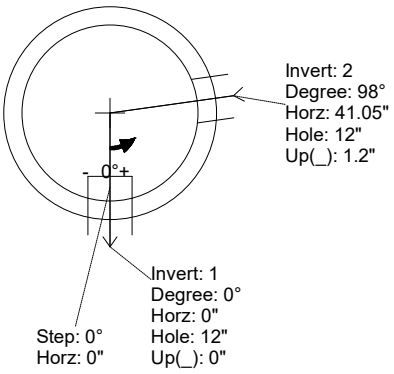

INSIDE WALL DIMENSIONS

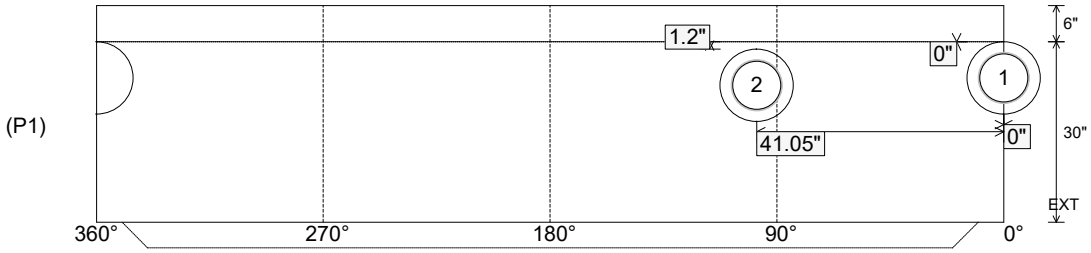

Coating (Int): Coating (Ext):	Seam Up: Tongue Seam Dn: n/a	Wall Thickness: 5" Floor Height: 6"	Height (Int): 30" Height (Ext): 36"	Weight (Net): 3330 lb Volume (Net): 0.85cu.yd

Job Name: 26-1355 Sinking Creek Rd Sanitary Sewer Ext. Ph. 2 Job Location: London, KY Contractor: Endesol, Inc.	Plant: Beaver Dam 6/2/2026 2:57:49 PM	Tech: S. Felletter PC: E. Bradley	

Structure ID: B-4-7 SS-MH

P1 MH048BA30CDARED MH BASE w/ConBlock-CDA Red T/n

P4) 24" - CASTING HEIGHT - 7"	0 lb
P3) 48" - ECC CONE w/ 24" HOLE, w/ConBlock-CDA Red F/G - 30"	1961 lb
P2) 48" - MH RISER w/ConBlock-CDA Red T/G - 36"	2515 lb
P1) 48" - MH BASE w/ConBlock-CDA Red T/n - 30"	3330 lb
1) JOINT WRAP - 0.065"x6"x50' CONSEAL CS212	0 lb
1) JOINT WRAP PRIMER - CONSEAL CS-75 (1 gal.)	0 lb
1) 48" - MH INVERT CHANNEL w/XYPEX - FULL HEIGHT	1440 lb
1) CASTING - HOE MC-350 F/C Sanitary	305 lb
2) 48" - Conseal CS-102 1.00" (Double)	0 lb
1) 24" - Conseal CS-102 1.00" (Double)	0 lb
2) PSX - 12-08 NYLO	16 lb
8) MH Step ML-10-TDS-NCR - 10"	0 lb
Structure Total:	9568 lb

Structure Notes: .
1. PER ASTM C478 SPECIFICATIONS.
2. CONCRETE = 4,000 PSI AT 28 DAYS.
3. ADMIXTURE = CONBLOCK CDA RED.
4. CASTING BY ICAST (HOE MC-350 F/C "SANITARY").
.
REINFORCING PER ASTM A615 (GRADE 60).
- CONE (As .12)
- RISER/WALLS (As .12)
- FLOOR (As .31) #5 BARS AT 12" C.C.E.W.

Invert channel drawing
Full height invert

Rim: 1232.5' Rim to Invert: 8.6' Slack: 2.2" Sump: 2" Step Position: 0°

Position	Elev	Angle	Ext. (cw)	Pipe	Pipe OD	Connector	Hole	Horz Size	Up (_)	Offset
Invert 1	1223.9'	0°	0"	8" PVC SDR35	8.5"	PSX 12-08 NYLO	12"	12.129"	0"	0"
Invert 2	1224'	98°	49.602"	8" PVC SDR35	8.5"	PSX 12-08 NYLO	12"	12.129"	1.2"	0"
Invert 3										
Invert 4										
Invert 5										
Invert 6										
Invert 7										
Invert 8										

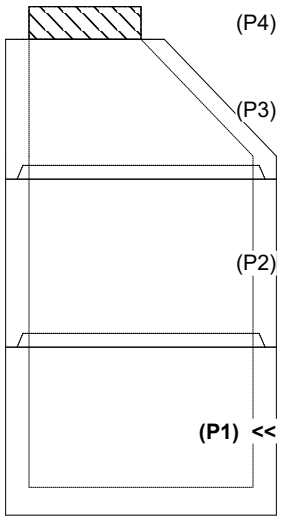

RIGHT-SIDE UP VIEW (int. dimensions)

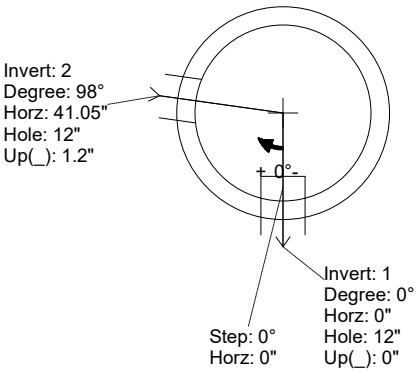

UPSIDE-DOWN VIEW (int. dimenions)

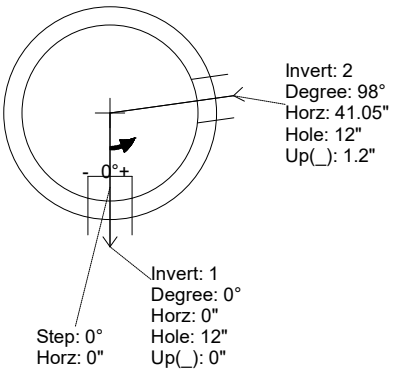

INSIDE WALL DIMENSIONS

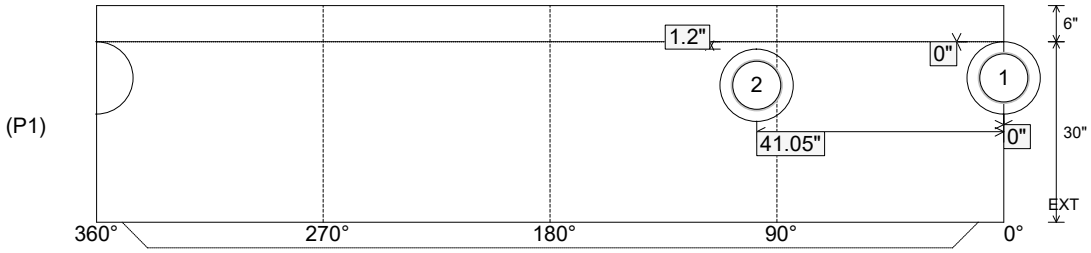

Coating (Int): Coating (Ext):	Seam Up: Tongue Seam Dn: n/a	Wall Thickness: 5" Floor Height: 6"	Height (Int): 30" Height (Ext): 36"	Weight (Net): 3330 lb Volume (Net): 0.85cu.yd

Job Name: 25-4299 - Seneca High School Job Location: Louisville, KY Contractor: Dan Cristiani Excavating Co. Inc.	Plant: 100 2/16/2026 8:19:43 AM	Tech: J. Horsley PC: J. Jarvis	

Structure ID: C2

P1 MH048BA30 MH BASE T/n

P3) 24" x 24" - CASTING HEIGHT - 4"	0 lb
P2) 48" - MH FLAT TOP w/24"x24" Hole LOU-MSD F/G - 12"	1500 lb
P1) 48" - MH BASE T/n - 30"	3032 lb
1) 48" - Conseal CS-102 1.00"	0 lb
1) 24" x 24" - Conseal CS-102 1.00"	0 lb
2) Hole - 24	0 lb
3) MH Step ML-10-TDS-NCR - 10"	0 lb
Structure Total:	4532 lb

Structure Notes:
1. PER LOUISVILLE MSD / ASTM C-478 SPECIFICATIONS
2. CONCRETE: 4,000 PSI AT 28 DAYS
3. REINFORCEMENT: PER ASTM A615
4. NO STORM INVERT
5. STEPS AT 108 DEGREES
6. HOE 280T FRAME & GRATE SUPPLIED BY OTHERS

Rim: 485.1' Rim to Invert: 4' Slack: 2" Sump: 0" Step Position: 108°

Position	Elev	Angle	Ext. (cw)	Pipe	Pipe OD	Connector	Hole	Horz Size	Up (_)	Offset
Invert 1	481.1'	0°	0"	18" HDPE	21.2"	Hole 24	24"	25.133"	-1.6"	0"
Invert 2	481.1'	216°	109.327"	18" HDPE	21.2"	Hole 24	24"	25.133"	-1.6"	0"
Invert 3										
Invert 4										
Invert 5										
Invert 6										
Invert 7										
Invert 8										

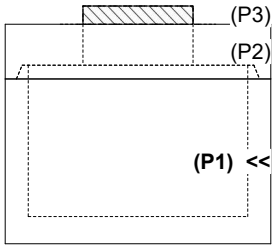

RIGHT-SIDE UP VIEW (int. dimensions)

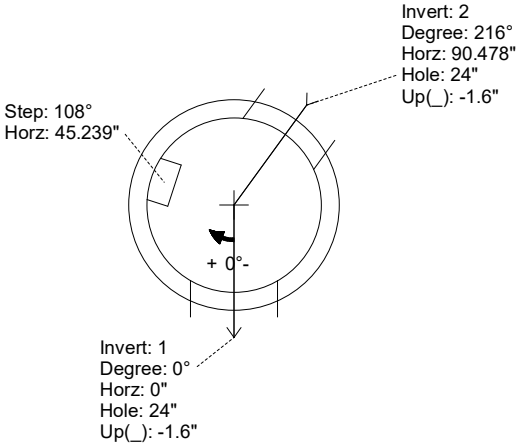

UPSIDE-DOWN VIEW (int. dimenions)

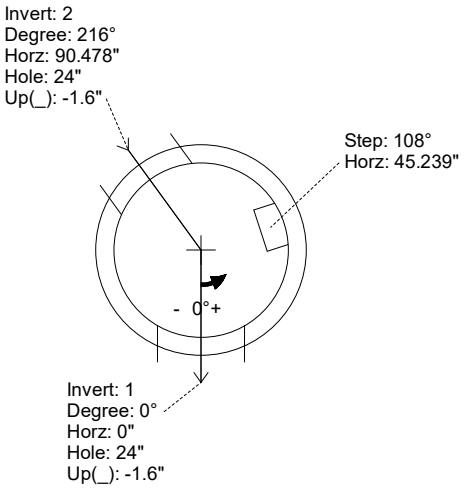

INSIDE WALL DIMENSIONS

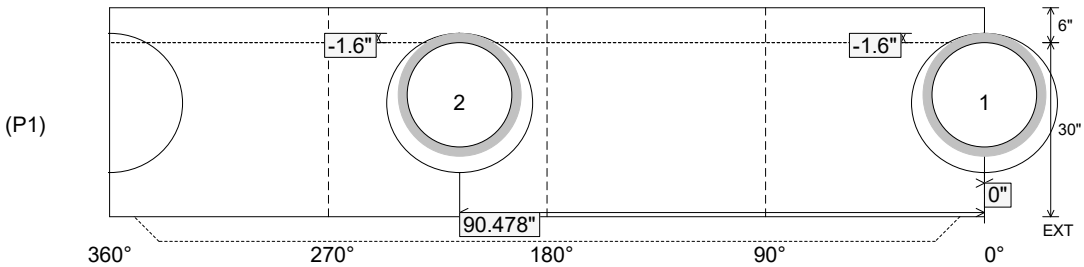

Coating (Int): Coating (Ext):	Seam Up: Tongue Seam Dn: n/a	Wall Thickness: 5" Floor Height: 6"	Height (Int): 30" Height (Ext): 36"	Weight (Net): 3032 lb Volume (Net): 0.77cu.yd

Job Name: 25-4212 - Greentree Lane Sewer Job Location: Mt. Washington, KY Contractor: Citgo Waterworks	Plant: 100 6/30/2026 12:37:18 PM	Tech: J. Horsley - F PC: C. Goff	

Structure ID: A10 REV.A

P1 MH060BAVF MH BASE Custom Ht

P4)	24" - CASTING HEIGHT - 4.75"	0 lb
P3)	48" - ECC CONE w/ 24" HOLE NO STEP - 24"	1550 lb
P2)	60" - MH Transition Slab 48" Hole - 13"	1928 lb
P1)	60" - MH BASE Custom Ht - 58"	8397 lb
1)	JOINT WRAP - 0.065"x6"x50' CONSEAL CS212	0 lb
1)	JOINT WRAP PRIMER - CONSEAL CS-75 (1 gal.)	0 lb
1)	60" - MH INVERT CHANNEL - FULL HEIGHT	2692 lb
1)	SPECIAL EXTERNAL COATING - CARBOLINE 300M	0 lb
1)	60" - Conseal CS-102 1.00" (Double)	0 lb
1)	48" - Conseal CS-102 1.00" (Double)	0 lb
1)	24" - Conseal CS-102 1.00" (Double)	0 lb
2)	Kor-N-Seal2 - S206-22	13 lb
179.3 SqFt)	Carboline Bitumastic 300M [EXT]	0 lb
	Structure Total:	14580 lb

Rim: 694.04' Rim to Invert: 8.17' Slack: 0.294' Sump: 2.004' Step Position:

Structure Notes: .
1. PER ASTM C478 SPECIFICATIONS.
2. CONCRETE = 4,000 PSI AT 28 DAYS.
3. NO STEPS.
4. CASTING SUPPLIED BY OTHERS.
5. CARBOLINE 300M >>EXTERIOR COATING ONLY<<
REINFORCING PER ASTM A615 (GRADE 60).
- CONE (As .12)
- RISER/WALLS (As .12)
- TRANSITION SLAB (As .31) #5 BARS AT 6" C.C.E.W.
- RISER/WALLS (As .18)
- FLOOR (As .37) #5 BARS AT 10" C.C.E.W.

Position	Elev	Angle	Ext. (cw)	Pipe	Pipe OD	Connector	Hole	Horz Size	Up (_)	Offset
Invert 1	685.87'	0°	0"	18" PVC SDR35	18.75"	Kor-N-Seal2 S206-22	22"	22.525"	0.004"	0"
Invert 2	685.97'	180°	113.097"	18" PVC SDR35	18.75"	Kor-N-Seal2 S206-22	22"	22.525"	1.204"	0"
Invert 3										
Invert 4										
Invert 5										
Invert 6										
Invert 7										
Invert 8										

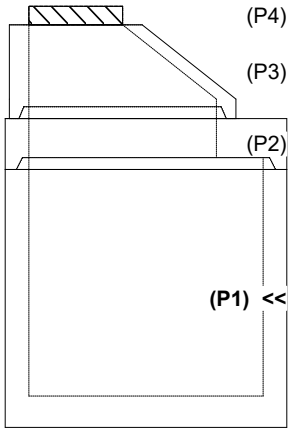

RIGHT-SIDE UP VIEW (int. dimensions)

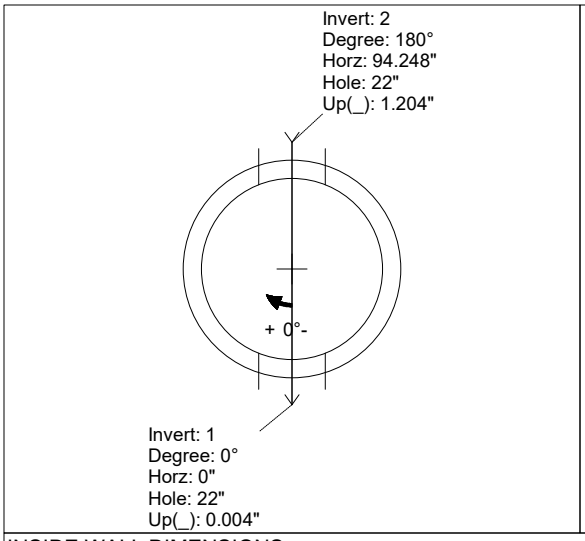

UPSIDE-DOWN VIEW (int. dimenions)

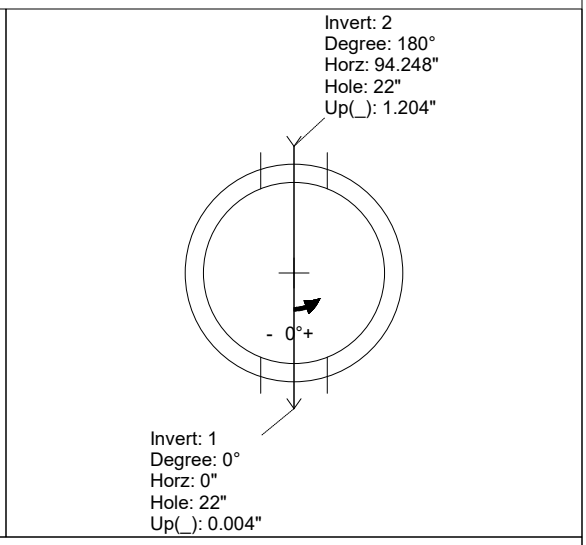

INSIDE WALL DIMENSIONS

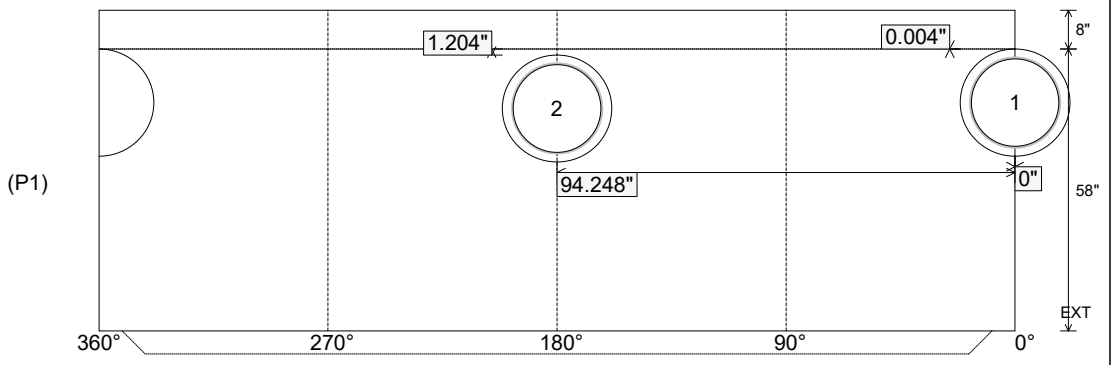

Coating (Int): Coating (Ext): Carboline Bitumastic 300M	Seam Up: Tongue Seam Dn: n/a	Wall Thickness: 6" Floor Height: 8"	Height (Int): 58" Height (Ext): 66"	Weight (Net): 8397 lb Volume (Net): 2.14cu.yd

Job Name: 25-4212 - Greentree Lane Sewer Job Location: Mt. Washington, KY Contractor: Citgo Waterworks	Plant: 100 6/30/2026 12:37:18 PM	Tech: J. Horsley - F PC: C. Goff	

Structure ID: A10 REV.A

P1 MH060BAVF MH BASE Custom Ht

P4)	24" - CASTING HEIGHT - 4.75"	0 lb
P3)	48" - ECC CONE w/ 24" HOLE NO STEP - 24"	1550 lb
P2)	60" - MH Transition Slab 48" Hole - 13"	1928 lb
P1)	60" - MH BASE Custom Ht - 58"	8397 lb
1)	JOINT WRAP - 0.065"x6"x50' CONSEAL CS212	0 lb
1)	JOINT WRAP PRIMER - CONSEAL CS-75 (1 gal.)	0 lb
1)	60" - MH INVERT CHANNEL - FULL HEIGHT	2692 lb
1)	SPECIAL EXTERNAL COATING - CARBOLINE 300M	0 lb
1)	60" - Conseal CS-102 1.00" (Double)	0 lb
1)	48" - Conseal CS-102 1.00" (Double)	0 lb
1)	24" - Conseal CS-102 1.00" (Double)	0 lb
2)	Kor-N-Seal2 - S206-22	13 lb
179.3 SqFt)	Carboline Bitumastic 300M [EXT]	0 lb
	Structure Total:	14580 lb

Structure Notes: .
1. PER ASTM C478 SPECIFICATIONS.
2. CONCRETE = 4,000 PSI AT 28 DAYS.
3. NO STEPS.
4. CASTING SUPPLIED BY OTHERS.
5. CARBOLINE 300M >>EXTERIOR COATING ONLY<<
REINFORCING PER ASTM A615 (GRADE 60).
- CONE (As .12)
- RISER/WALLS (As .12)
- TRANSITION SLAB (As .31) #5 BARS AT 6" C.C.E.W.
- RISER/WALLS (As .18)
- FLOOR (As .37) #5 BARS AT 10" C.C.E.W.

INVERT CHANNEL DRAWING
FULL HEIGHT INVERT

Rim: 694.04' Rim to Invert: 8.17' Slack: 0.294" Sump: 2.004" Step Position:

Position	Elev	Angle	Ext. (cw)	Pipe	Pipe OD	Connector	Hole	Horz Size	Up (_)	Offset
Invert 1	685.87'	0°	0"	18" PVC SDR35	18.75"	Kor-N-Seal2 S206-22	22"	22.525"	0.004"	0"
Invert 2	685.97'	180°	113.097"	18" PVC SDR35	18.75"	Kor-N-Seal2 S206-22	22"	22.525"	1.204"	0"
Invert 3										
Invert 4										
Invert 5										
Invert 6										
Invert 7										
Invert 8										

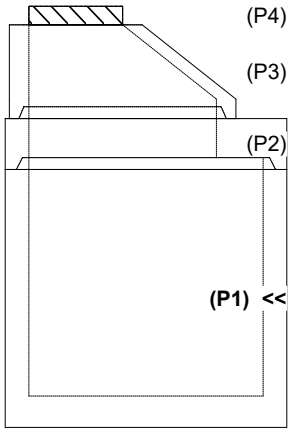

RIGHT-SIDE UP VIEW (int. dimensions)

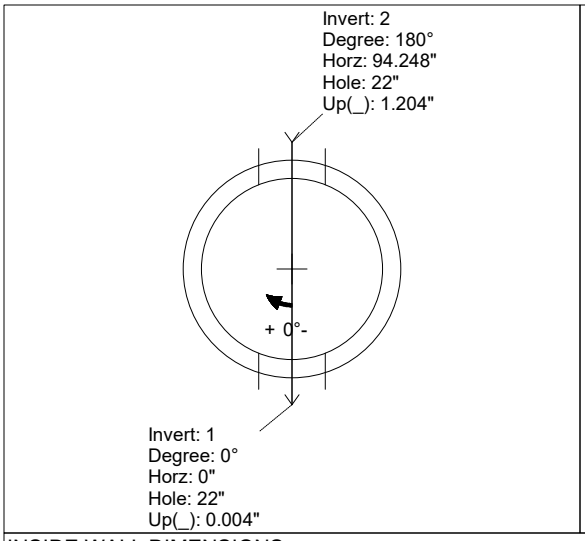

UPSIDE-DOWN VIEW (int. dimenions)

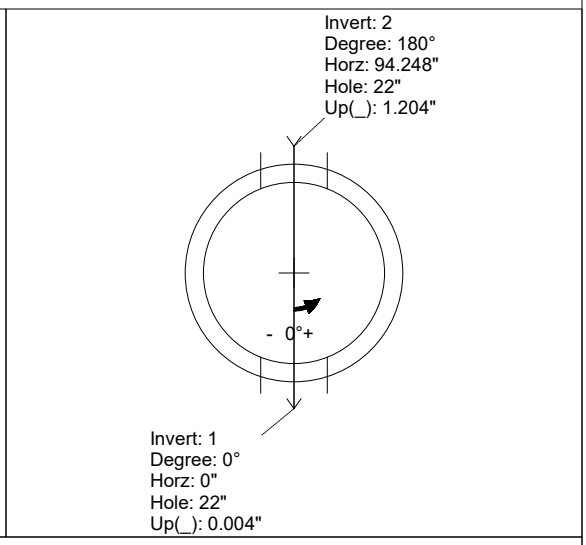

INSIDE WALL DIMENSIONS

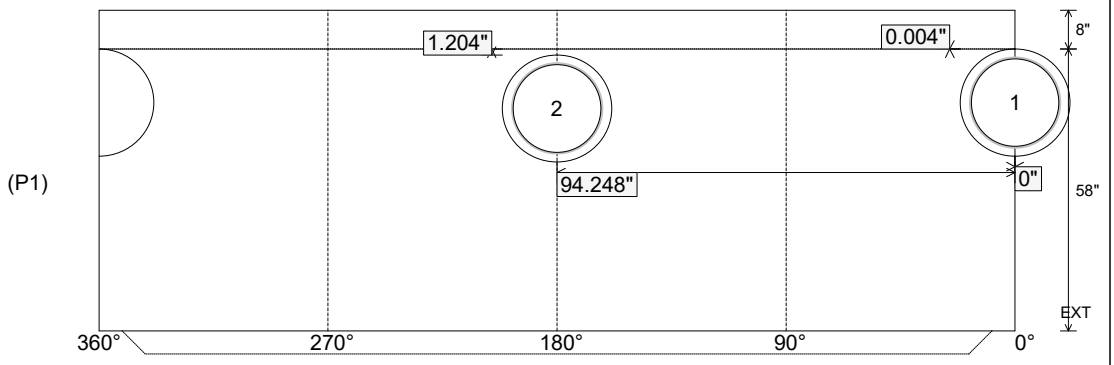

Coating (Int): Coating (Ext): Carboline Bitumastic 300M	Seam Up: Tongue Seam Dn: n/a	Wall Thickness: 6" Floor Height: 8"	Height (Int): 58" Height (Ext): 66"	Weight (Net): 8397 lb Volume (Net): 2.14cu.yd

Job Name: 25-4212 - Greentree Lane Sewer Job Location: Mt. Washington, KY Contractor: Citgo Waterworks	Plant: 100 6/30/2026 12:37:55 PM	Tech: J. Horsley - F PC: C. Goff	

Structure ID: A10 REV.A

P2 MH060TS13-48ECC MH Transition Slab 48" Hole

P4)	24" - CASTING HEIGHT - 4.75"	0 lb
P3)	48" - ECC CONE w/ 24" HOLE NO STEP - 24"	1550 lb
P2)	60" - MH Transition Slab 48" Hole - 13"	1928 lb
P1)	60" - MH BASE Custom Ht - 58"	8397 lb
1)	JOINT WRAP - 0.065"x6"x50' CONSEAL CS212	0 lb
1)	JOINT WRAP PRIMER - CONSEAL CS-75 (1 gal.)	0 lb
1)	60" - MH INVERT CHANNEL - FULL HEIGHT	2692 lb
1)	SPECIAL EXTERNAL COATING - CARBOLINE 300M	0 lb
1)	60" - Conseal CS-102 1.00" (Double)	0 lb
1)	48" - Conseal CS-102 1.00" (Double)	0 lb
1)	24" - Conseal CS-102 1.00" (Double)	0 lb
2)	Kor-N-Seal2 - S206-22	13 lb
179.3 SqFt)	Carboline Bitumastic 300M [EXT]	0 lb
	Structure Total:	14580 lb

Structure Notes: .
1. PER ASTM C478 SPECIFICATIONS.
2. CONCRETE = 4,000 PSI AT 28 DAYS.
3. NO STEPS.
4. CASTING SUPPLIED BY OTHERS.
5. CARBOLINE 300M >>EXTERIOR COATING ONLY<<
REINFORCING PER ASTM A615 (GRADE 60).
- CONE (As .12)
- RISER/WALLS (As .12)
- TRANSITION SLAB (As .31) #5 BARS AT 6" C.C.E.W.
- RISER/WALLS (As .18)
- FLOOR (As .37) #5 BARS AT 10" C.C.E.W.

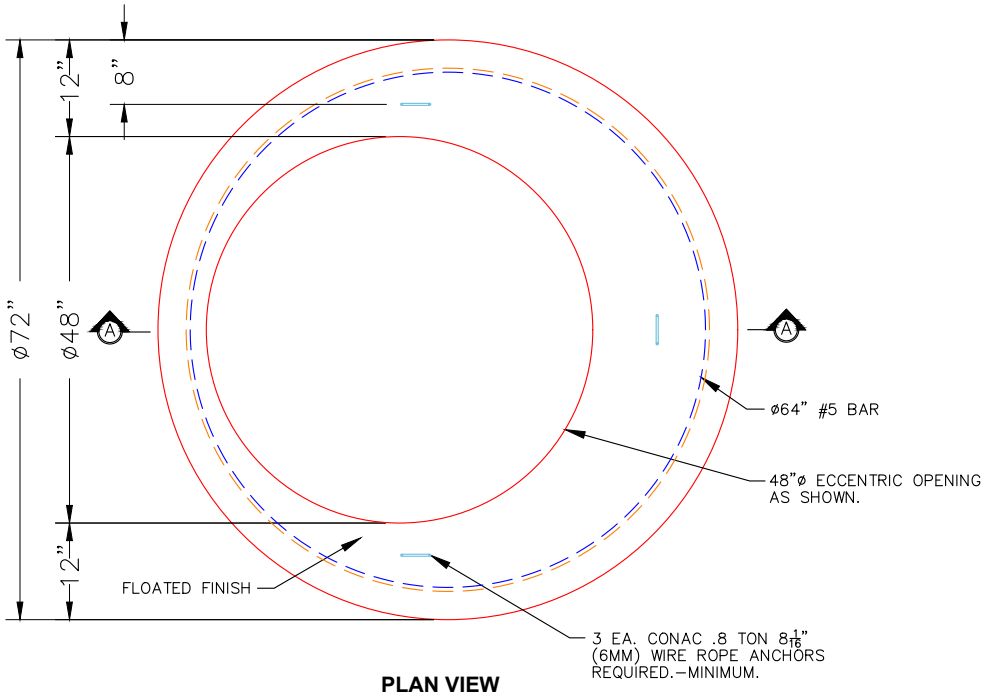

PLAN VIEW

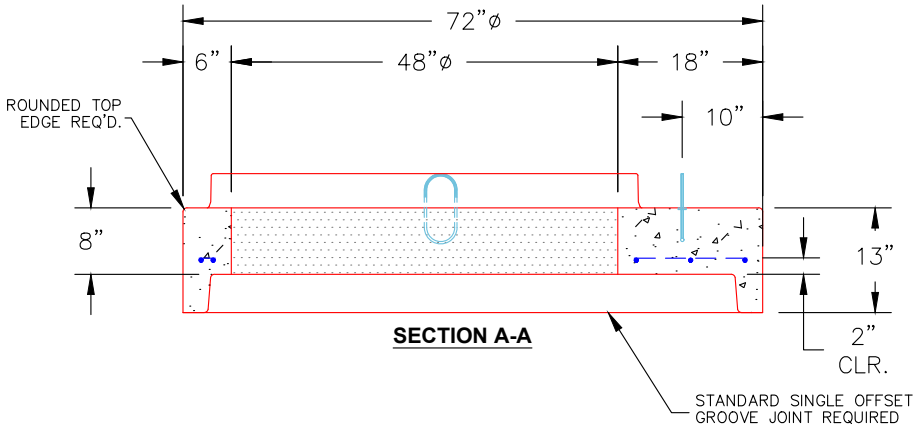

SECTION A-A

NOTES:
1. MANUFACTURED TO ASTM C–478 (LATEST REVISION).
2. CONCRETE: 4,000 PSI AT 28 DAYS.
3. REINFORCING: #5 BAR @ 6" O.C. E.W. (GRADE 60).

Coating (Int): Coating (Ext): Carboline Bitumastic 300M	Seam Up: Tongue Seam Dn: Groove	Wall Thickness: 6"	Height (Ext): 13"	Weight (Net): 1928 lb Volume (Net): 0.49cu.yd

Job Name: 25-3535 - LFCU Boonville Job Location: Boonville, IN 47601 Contractor: Hahn Excavating, Inc.	Plant: 100 6/24/2026 12:45:45 PM	Tech: J. Horsley - A PC: E. Bradley	

Structure ID: MH106

P1 MH060BAVF **MH BASE Custom Ht F/n**

P3) 24" - CASTING HEIGHT - 7"	0 lb
P2) 60" - MH FLAT TOP w/ 24" ECC Hole F/F - 8"	2429 lb
P1) 60" - MH BASE Custom Ht F/n - 57"	7771 lb
1) CASTING - HOE MC-315 F/C Storm	258 lb
1) 60" - Conseal CS-102 1.00"	0 lb
1) 24" - Conseal CS-102 1.00"	0 lb
1) Hole - 44	0 lb
1) Hole - 12	0 lb
1) Hole - 6	0 lb
5) MH Step ML-10-TDS-NCR - 10"	0 lb
Structure Total:	10458 lb

Structure Notes:
1. PER ASTM C-478 SPECIFICATIONS
2. CONCRETE: 4,000 PSI AT 28 DAYS
3. REINFORCEMENT: PER ASTM A615
4. STORM INVERT BY OTHERS
5. STEPS 90 DEGREES
6. HOE MC-315 FRAME & COVER "STORM" SUPPLIED BY ICAST

Rim: 421.47' Rim to Invert: 5.78' Slack: 0.21" Sump: 2.85" Step Position: 90°

Position	Elev	Angle	Ext. (cw)	Pipe	Pipe OD	Connector	Hole	Horz Size	Up (_)	Offset
Invert 1	415.69'	0°	0"	36" HDPE	41.7"	Hole 44	44"	49.393"	0"	0"
Invert 2	417.96'	270°	169.625"	8" HDPE	9.1"	Hole 12	12"	12.081"	29.5"	0"
Invert 3	419.25'	180°	113.125"	3" PVC SDR35	3.25"	Hole 6	6"	6.01"	45.5"	0"
Invert 4										
Invert 5										
Invert 6										
Invert 7										
Invert 8										

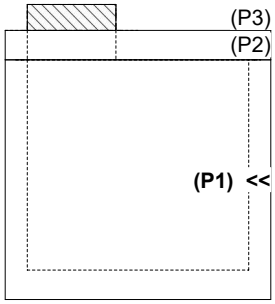

RIGHT-SIDE UP VIEW (int. dimensions)

UPSIDE-DOWN VIEW (int. dimenions)

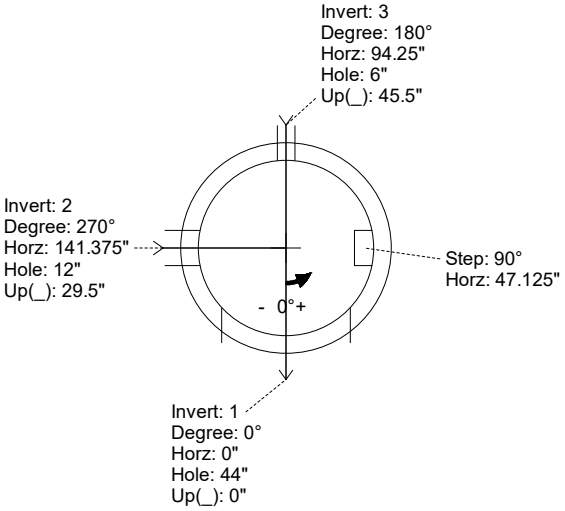

INSIDE WALL DIMENSIONS

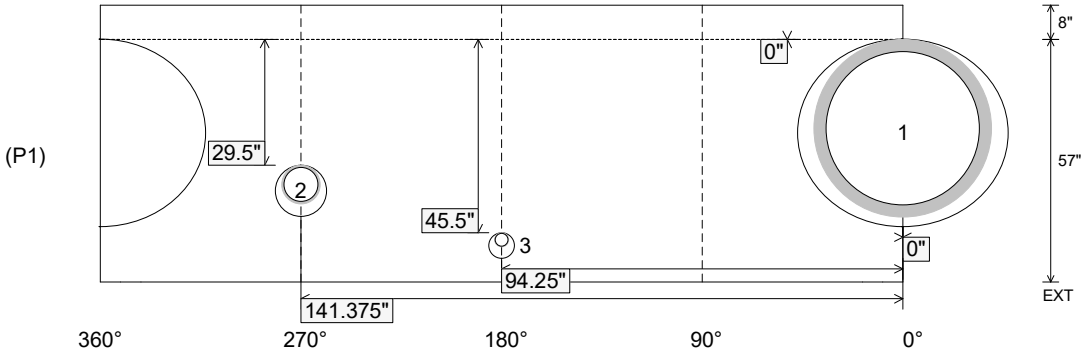

Coating (Int): Coating (Ext):	Seam Up: Flat Seam Dn: n/a	Wall Thickness: 6" Floor Height: 8"	Height (Int): 57" Height (Ext): 65"	Weight (Net): 7771 lb Volume (Net): 1.98cu.yd

Job Name: 25-3062 Portland Bypass Job Location: Portland, TN Contractor: Scotty's Contracting & Stone, LLC	Plant: Beaver Dam 6/1/2026 8:24:15 AM	Tech: J. Coppage PC: C. Goff	

Structure ID: CB-21

P3 MH060LD10SP **MH FLAT TOP - TDOT NO 12 (28"x34" Hole)**

P4) 28" x 34" - CASTING HEIGHT - 7"	0 lb
P3) 60" - MH FLAT TOP - TDOT NO 12 (28"x34" Hole) - 10"	3417 lb
P2) 60" - MH RISER SPECIAL/CUST. HT - 26"	2385 lb
P1) 60" - MH BASE Custom Ht - 50"	6941 lb
1) CASTING - JBS-3123 MODIFIED SET	250 lb
2) 60" - Conseal CS-102 1.00"	0 lb
1) 28" x 34" - Conseal CS-102 1.00"	0 lb
1) Hole - 40	0 lb
1) Hole - 39	0 lb
1) Hole - 6	0 lb
Structure Total:	12993 lb

Structure Notes:
1. PER TDOT D-CB-12RB / ASTM C478 SPEC'S.
2. CONCRETE = 4,000 PSI AT 28 DAYS.
3. NO INVERT CHANNEL.
4. JBS 3123 MOD SINGLE SET BY ICAST
5. REINFORCING PER ASTM A615 (GRADE 60).
** PER TDOT STD DRAWING D-CB-12RB **
- TOP SLAB - DBL MAT #5 BARS.
- RISER (As .18)
- FLOOR (As .62) #5 BARS AT 6" C.C.E.W.

NOTES:
1. MANUFACTURED TO ASTM C-478 (LATEST REVISION).
2. CONCRETE: 4,000 PSI AT 28 DAYS.
3. REINFORCING: PER TDOT DRAWING D-CB-12RA OR D-RL-1 FOR WWM OPTION.

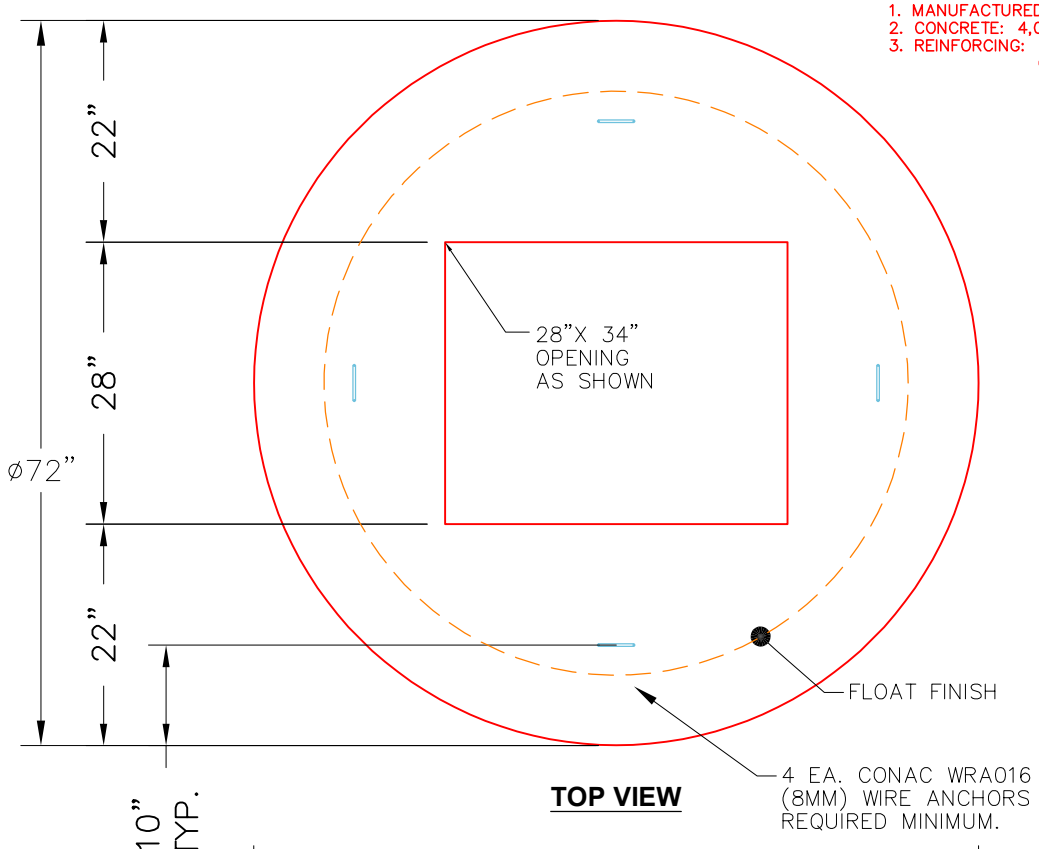

TOP VIEW

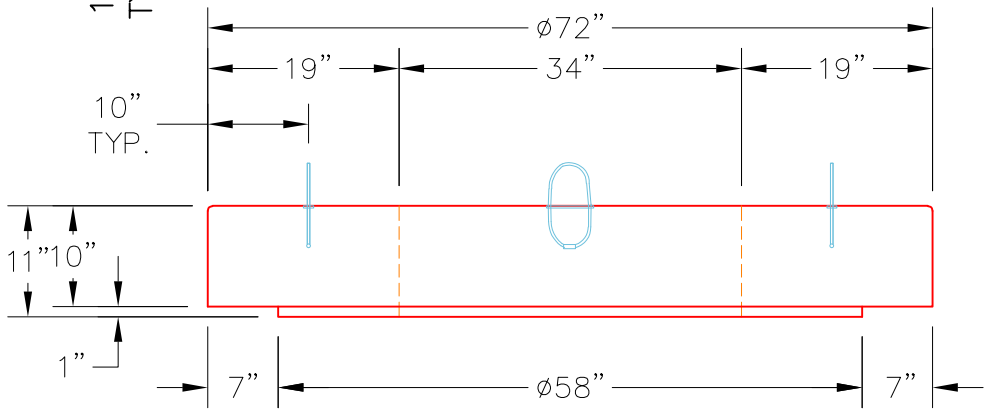

FRONT VIEW

Coating (Int): Coating (Ext):	Seam Up: Flat Seam Dn: Flat	Wall Thickness: 6"	Height (Ext): 10"	Weight (Net): 3417 lb Volume (Net): 0.87cu.yd

Job Name: 25-3118 - W6 Ph 2-C Force Main Improvements Job Location: Fort Mitchell, KY 41017 Contractor: Lykins Contracting	Plant: 100 3/20/2026 1:21:53 PM	Tech: J. Horsley - A PC: Celina Goff	

Structure ID: 2301565

P1 MH060DPVF **MH BASE w/DROP Custom Ht T/n**

P6) 24" - CASTING HEIGHT - 7"	0 lb
P5) 24" - GRADE RING F/F - 3"	202 lb
P4) 48" - CON CONE w/24" HOLE F/G - 36"	2252 lb
P3) 48" - MH RISER T/G - 48"	3353 lb
P2) 60" - MH Transition Slab 48" Hole T/G - 15"	2204 lb
P1) 60" - MH BASE w/DROP Custom Ht T/n - 72"	8838 lb
1) 60" - MH INVERT CHANNEL - FULL HEIGHT	2692 lb
1) SECONDARY POUR - Add Exterior Drop to Base (P1)	3440 lb
1) 60" - Conseal CS-102 1.00" (Double)	0 lb
2) 48" - Conseal CS-102 1.00" (Double)	0 lb
2) A-Lok - 1235	2 lb
1) Drop Tee - 8" PVC	0 lb
1) Drop Elbow - 8" PVC	0 lb
13) MH Step ML-10-TDS-NCR - 10"	0 lb
Structure Total:	22984 lb

Rim: 760.2' Rim to Invert: 14.96' Slack: 1.52" Sump: 3" Step Position: 75°

Structure Notes:
1. PER ASTM C-478 SPECIFICATIONS
2. CONCRETE: 4,000 PSI AT 28 DAYS
3. REINFORCEMENT:
   - WALLS: PER ASTM A615 - DOUBLE MAT
   - FLOOR: #5 BAR @ 12" C.C. E.W. (GRADE 60) - 2" MIN. REBAR CLEARANCE (TYP)
4. INVERT CHANNEL REQUIRED
5. STEPS AT 75 DEGREES
6. 7" CASTING SUPPLIED BY OTHERS
7. EXTERIOR DROP AT INVERTS 2 & 4 SUPPLIED BY ICAST

FIRST POUR (BASE): 8,838 LBS
SECOND POUR (DROP): 3,440 LBS

Position	Elev	Angle	Ext. (cw)	Pipe	Pipe OD	Connector	Hole	Horz Size	Up (_)	Offset
Invert 1	745.24'	0°	0"	36" PVC SDR35/F679	38.3"	A-Lok 1235	39.88"	43.623"	1.125"	0"
Invert 2	749.69'	128°	80.375"	8" PVC SDR35	8.5"	Drop Tee 8" PVC	8.5"	8.529"	56.125"	0"
Invert 3	745.34'	216°	135.75"	36" PVC SDR35/F679	38.3"	A-Lok 1235	39.88"	43.623"	2.25"	0"
Invert 4	747.04'	128°	80.375"	8" PVC SDR35	8.5"	Drop Elbow 8" PVC	8.5"	8.529"	24.375"	0"
Invert 5										
Invert 6										
Invert 7										
Invert 8										

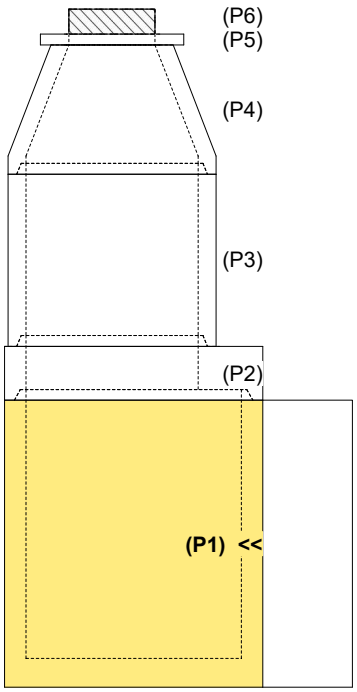

RIGHT-SIDE UP VIEW (int. dimensions)

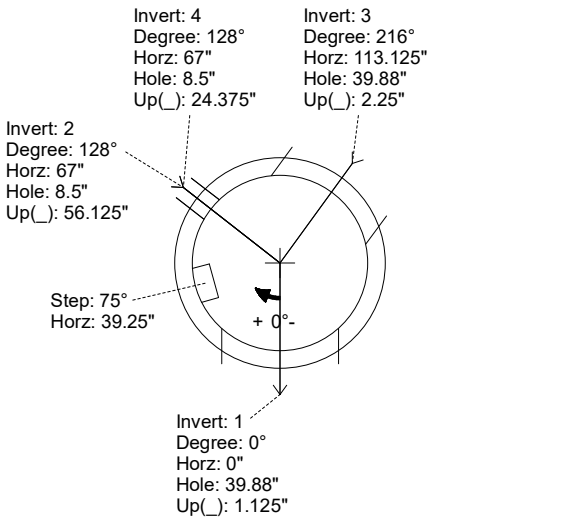

UPSIDE-DOWN VIEW (int. dimenions)

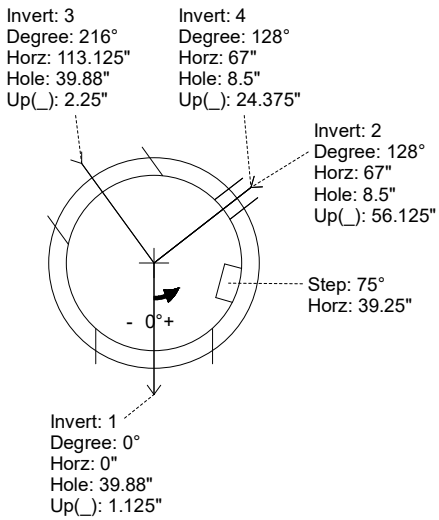

INSIDE WALL DIMENSIONS

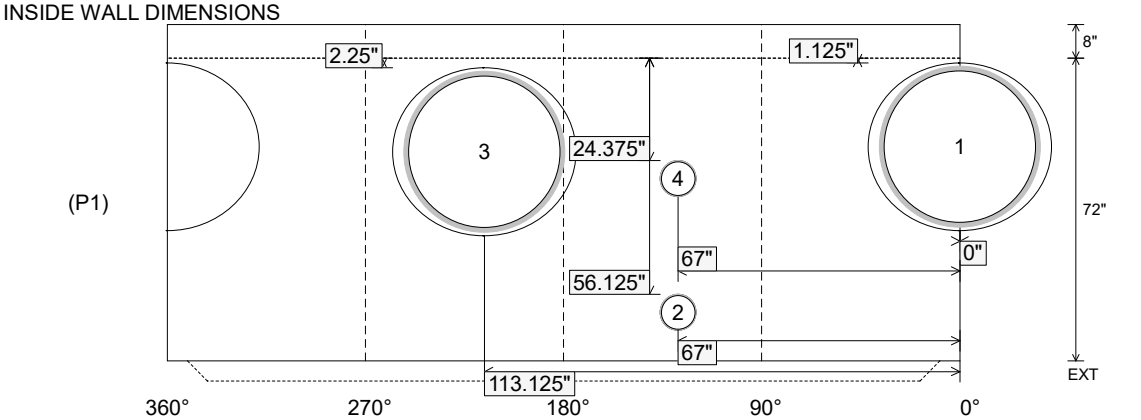

Coating (Int): Coating (Ext):	Seam Up: Tongue Seam Dn: n/a	Wall Thickness: 6" Floor Height: 8"	Height (Int): 72" Height (Ext): 80"	Weight (Net): 8838 lb Volume (Net): 2.26cu.yd

Job Name: 25-3118 - W6 Ph 2-C Force Main Improvements Job Location: Fort Mitchell, KY 41017 Contractor: Lykins Contracting	Plant: 100 3/20/2026 1:21:53 PM	Tech: J. Horsley - A PC: Celina Goff	

Structure ID: 2301565

P1 MH060DPVF MH BASE w/DROP Custom Ht T/n

P6) 24" - CASTING HEIGHT - 7"	0 lb
P5) 24" - GRADE RING F/F - 3"	202 lb
P4) 48" - CON CONE w/24" HOLE F/G - 36"	2252 lb
P3) 48" - MH RISER T/G - 48"	3353 lb
P2) 60" - MH Transition Slab 48" Hole T/G - 15"	2204 lb
P1) 60" - MH BASE w/DROP Custom Ht T/n - 72"	8838 lb
1) 60" - MH INVERT CHANNEL - FULL HEIGHT	2692 lb
1) SECONDARY POUR - Add Exterior Drop to Base (P1)	3440 lb
1) 60" - Conseal CS-102 1.00" (Double)	0 lb
2) 48" - Conseal CS-102 1.00" (Double)	0 lb
2) A-Lok - 1235	2 lb
1) Drop Tee - 8" PVC	0 lb
1) Drop Elbow - 8" PVC	0 lb
13) MH Step ML-10-TDS-NCR - 10"	0 lb
Structure Total:	22984 lb

Structure Notes:
1. PER ASTM C-478 SPECIFICATIONS
2. CONCRETE: 4,000 PSI AT 28 DAYS
3. EXTERIOR DROP REINFORCEMENT: DRILL & STUB #4 BAR @ 12" C.C. E.W. (GRADE 60) - 2" MIN. REBAR CLEARANCE (TYP)
4. INVERT CHANNEL REQUIRED
5. STEPS AT 75 DEGREES
6. 7" CASTING SUPPLIED BY OTHERS
7. EXTERIOR DROP AT INVERTS 2 & 4 SUPPLIED BY ICAST
8. ADD 8" SDR 35 DROP, TEE AT INVERT 2 (128°), & ELBOW AT INVERT 4 (128°)

FIRST POUR (BASE): 8,838 LBS

SECOND POUR (DROP): 3,440 LBS

Rim: 760.2' Rim to Invert: 14.96' Slack: 1.52" Sump: 3" Step Position: 75°

Position	Elev	Angle	Ext. (cw)	Pipe	Pipe OD	Connector	Hole	Horz Size	Up (_)	Offset
Invert 1	745.24'	0°	0"	36" PVC SDR35/F679	38.3"	A-Lok 1235	39.88"	43.623"	1.125"	0"
Invert 2	749.69'	128°	80.375"	8" PVC SDR35	8.5"	Drop Tee 8" PVC	8.5"	8.529"	56.125"	0"
Invert 3	745.34'	216°	135.75"	36" PVC SDR35/F679	38.3"	A-Lok 1235	39.88"	43.623"	2.25"	0"
Invert 4	747.04'	128°	80.375"	8" PVC SDR35	8.5"	Drop Elbow 8" PVC	8.5"	8.529"	24.375"	0"
Invert 5										
Invert 6										
Invert 7										
Invert 8										

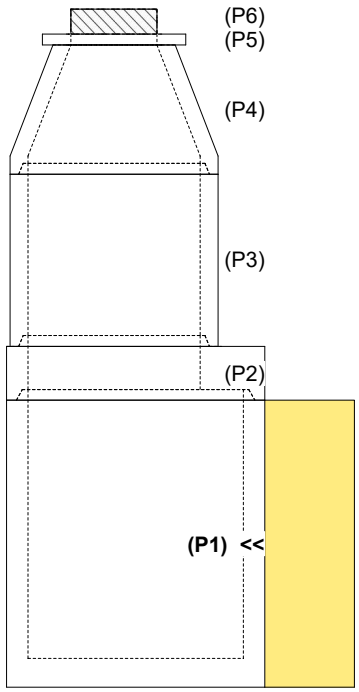

RIGHT-SIDE UP VIEW (int. dimensions)

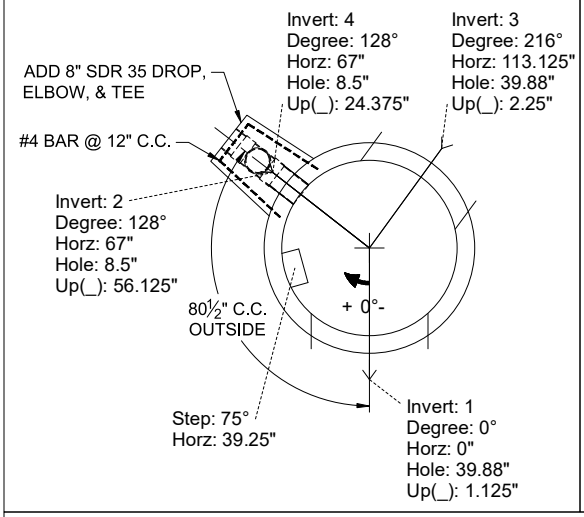

UPSIDE-DOWN VIEW (int. dimenions)

INSIDE WALL DIMENSIONS

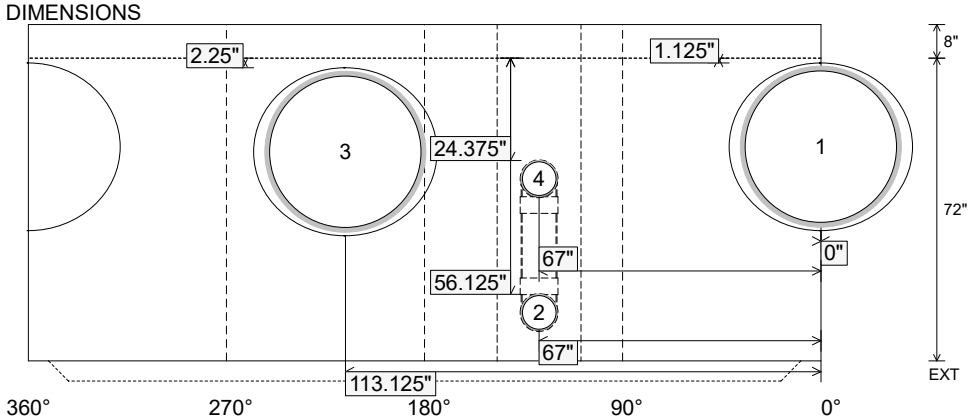

Coating (Int): Coating (Ext):	Seam Up: Tongue Seam Dn: n/a	Wall Thickness: 6" Floor Height: 8"	Height (Int): 72" Height (Ext): 80"	Weight (Net): 8838 lb Volume (Net): 2.26cu.yd

Job Name: 25-3118 - W6 Ph 2-C Force Main Improvements Job Location: Fort Mitchell, KY 41017 Contractor: Lykins Contracting	Plant: 100 3/20/2026 1:21:53 PM	Tech: J. Horsley - A PC: Celina Goff	

Structure ID: 2301565

P1 MH060DPVF **MH BASE w/DROP Custom Ht T/n**

P6) 24" - CASTING HEIGHT - 7"	0 lb
P5) 24" - GRADE RING F/F - 3"	202 lb
P4) 48" - CON CONE w/24" HOLE F/G - 36"	2252 lb
P3) 48" - MH RISER T/G - 48"	3353 lb
P2) 60" - MH Transition Slab 48" Hole T/G - 15"	2204 lb
P1) 60" - MH BASE w/DROP Custom Ht T/n - 72"	8838 lb
1) 60" - MH INVERT CHANNEL - FULL HEIGHT	2692 lb
1) SECONDARY POUR - Add Exterior Drop to Base (P1)	3440 lb
1) 60" - Conseal CS-102 1.00" (Double)	0 lb
2) 48" - Conseal CS-102 1.00" (Double)	0 lb
2) A-Lok - 1235	2 lb
1) Drop Tee - 8" PVC	0 lb
1) Drop Elbow - 8" PVC	0 lb
13) MH Step ML-10-TDS-NCR - 10"	0 lb
Structure Total:	22984 lb

Rim: 760.2' Rim to Invert: 14.96' Slack: 1.52" Sump: 3" Step Position: 75°

Structure Notes:
1. PER ASTM C-478 SPECIFICATIONS
2. CONCRETE: 4,000 PSI AT 28 DAYS
3. REINFORCEMENT:
   - WALLS: PER ASTM A615 - DOUBLE MAT
   - FLOOR: #5 BAR @ 12" C.C. E.W. (GRADE 60) - 2" MIN. REBAR CLEARANCE (TYP)
4. INVERT CHANNEL REQUIRED
5. STEPS AT 75 DEGREES
6. 7" CASTING SUPPLIED BY OTHERS
7. EXTERIOR DROP AT INVERTS 2 & 4 SUPPLIED BY ICAST

Position	Elev	Angle	Ext. (cw)	Pipe	Pipe OD	Connector	Hole	Horz Size	Up (_)	Offset
Invert 1	745.24'	0°	0"	36" PVC SDR35/F679	38.3"	A-Lok 1235	39.88"	43.623"	1.125"	0"
Invert 2	749.69'	128°	80.375"	8" PVC SDR35	8.5"	Drop Tee 8" PVC	8.5"	8.529"	56.125"	0"
Invert 3	745.34'	216°	135.75"	36" PVC SDR35/F679	38.3"	A-Lok 1235	39.88"	43.623"	2.25"	0"
Invert 4	747.04'	128°	80.375"	8" PVC SDR35	8.5"	Drop Elbow 8" PVC	8.5"	8.529"	24.375"	0"
Invert 5										
Invert 6										
Invert 7										
Invert 8										

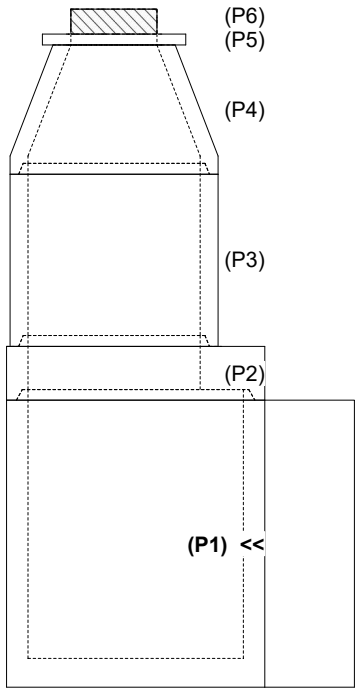

RIGHT-SIDE UP VIEW (int. dimensions)

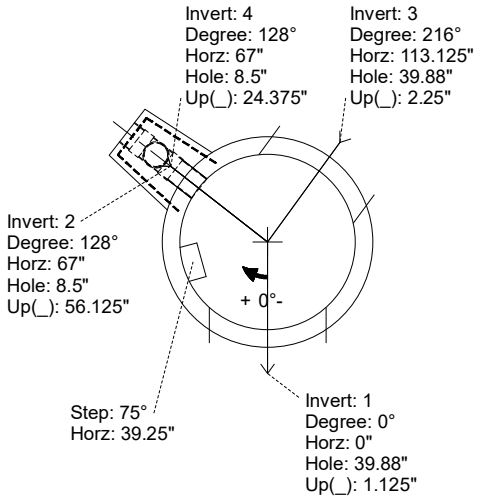

UPSIDE-DOWN VIEW (int. dimenions)

INVERT CHANNEL DRAWING

INSIDE WALL DIMENSIONS

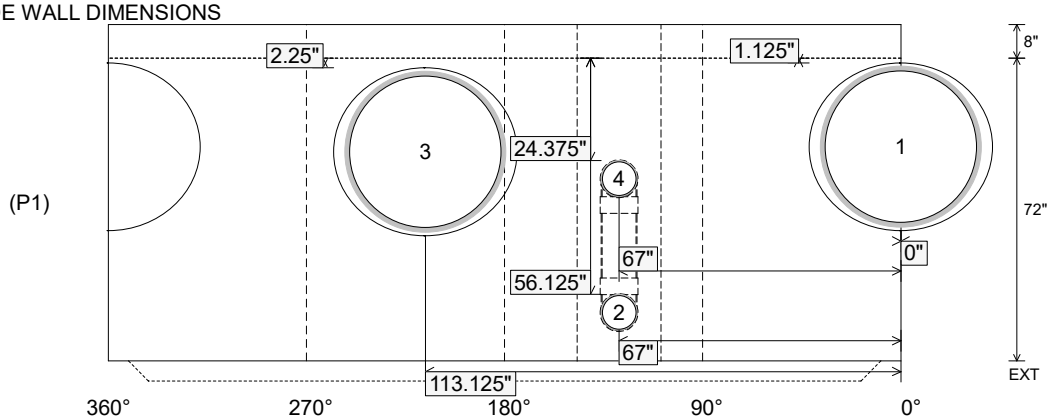

Coating (Int): Coating (Ext):	Seam Up: Tongue Seam Dn: n/a	Wall Thickness: 6" Floor Height: 8"	Height (Int): 72" Height (Ext): 80"	Weight (Net): 8838 lb Volume (Net): 2.26cu.yd

Job Name: 26-2799 892503 Regent Crt Condo Unit 5 Job Location: Dearborn, MI Contractor: Contech Engineering Solutions	Plant: Beaver Dam 6/25/2026 10:44:08 AM	Tech: S. Felletter PC: C. Goff	

Structure ID: 10-CS-6

P3 MH072RS24 MH RISER T/G

P5) 30" - CASTING HEIGHT - 4"	0 lb
P4) 72" - MH FLAT TOP SPEC. (30" ECC HOLE) F/G - 15"	4661 lb
P3) 72" - MH RISER T/G - 24"	3499 lb
P2) 72" - MH RISER T/G - 84"	11606 lb
P1) 72" - MH BASE T/n - 24"	7398 lb
1) ASSEMBLY REQUIRED	0 lb
1) CVSTENCILING	0 lb
3) 72" - Conseal CS-102 1.00"	0 lb
1) Hole - 24	0 lb
1) Hole - 28	0 lb
Structure Total:	27163 lb

Structure Notes: .
4" CASTING BY OTHERS
.
LIFTING ANCHORS TO BE INSTALLED ON THE OUTSIDE OF THE STRUCTURE
.
ICAST TO INSTALL THE INTERNALS
.
CONTECH'S LOGO AS WELL AS THE INLET AND OUTLET MUST BE STENCILED ONTO THE STRUCTURE

Rim: 602.5' Rim to Invert: 7.1' Slack: 3.236" Sump: 69.036" Step Position: 0°

Position	Elev	Angle	Ext. (cw)	Pipe	Pipe OD	Connector	Hole	Horz Size	Up (_)	Offset
Invert 1										
Invert 2										
Invert 3										
Invert 4										
Invert 5										
Invert 6										
Invert 7										
Invert 8										

RIGHT-SIDE UP VIEW (int. dimensions)

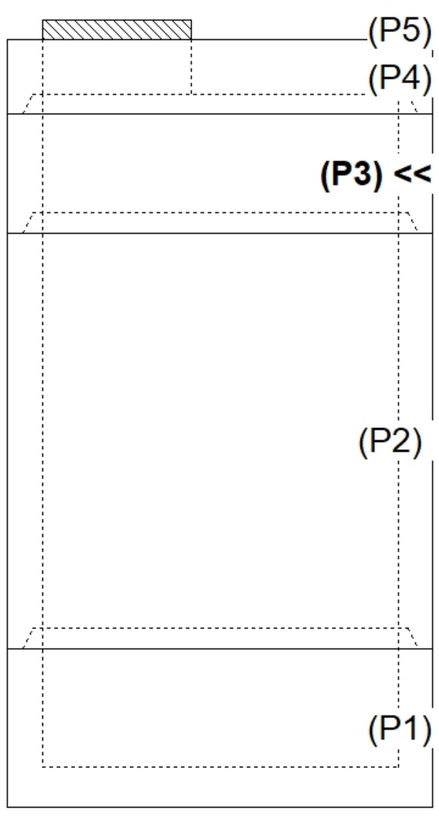

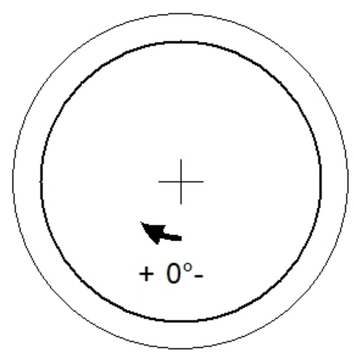

INSIDE WALL DIMENSIONS

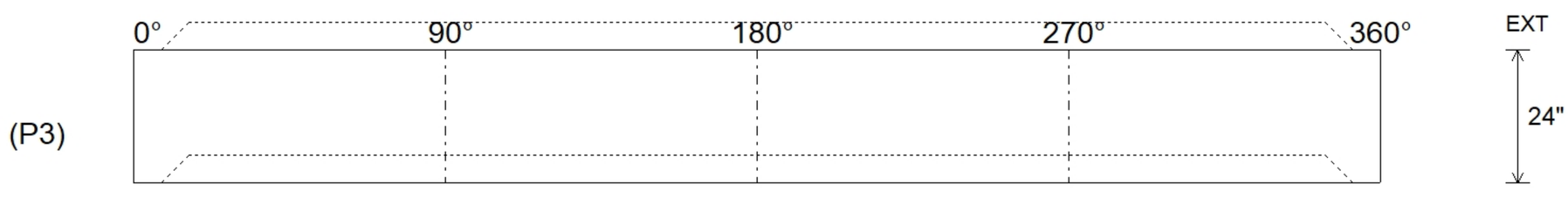

Coating (Int): Coating (Ext):	Seam Up: Tongue Seam Dn: Groove	Wall Thickness: 7" Floor Height: 0"	Height (Int): 24" Height (Ext): 24"	Weight (Net): 3499 lb Volume (Net): 0.89cu.yd

Job Name: 26-2800 901652 13635 Telegraph Road Job Location: CPU Contractor: Contech Engineering Solutions	Plant: Beaver Dam 6/30/2026 1:03:46 PM	Tech: S. Felletter PC: C. Goff	

Structure ID: 15-CS-6

P3 MH072LD15SP **MH FLAT TOP w/ 30" CASTING CAST IN F/G**

P4) 30" - CASTING HEIGHT - 0"	0 lb
P3) 72" - MH FLAT TOP w/ 30" CASTING CAST IN F/G - 15"	4663 lb
P2) 72" - MH RISER Custom Ht T/G - 70"	9967 lb
P1) 72" - MH BASE (09"F) Custom Ht T/n - 24"	7886 lb
1) ASSEMBLY REQUIRED	0 lb
1) CVSTENCILING	0 lb
2) 72" - Conseal CS-102 1.00"	0 lb
2) Hole - 16	0 lb
Structure Total:	22515 lb

Structure Notes: .
4" CASTING BY OTHERS
.
LIFTING ANCHORS TO BE INSTALLED ON THE OUTSIDE OF THE STRUCTURE
.
ICAST TO INSTALL THE INTERNALS
.
CONTECH'S LOGO AS WELL AS THE INLET AND OUTLET MUST BE STENCILED ONTO THE STRUCTURE

NOTES:
1. MANUFACTURED TO ASTM C-478 (LATEST REVISION).
2. CONCRETE: 4,000 PSI AT 28 DAYS.
3. REINFORCING: #5 BAR @ 6" C.C. E.W. (GRADE 60).

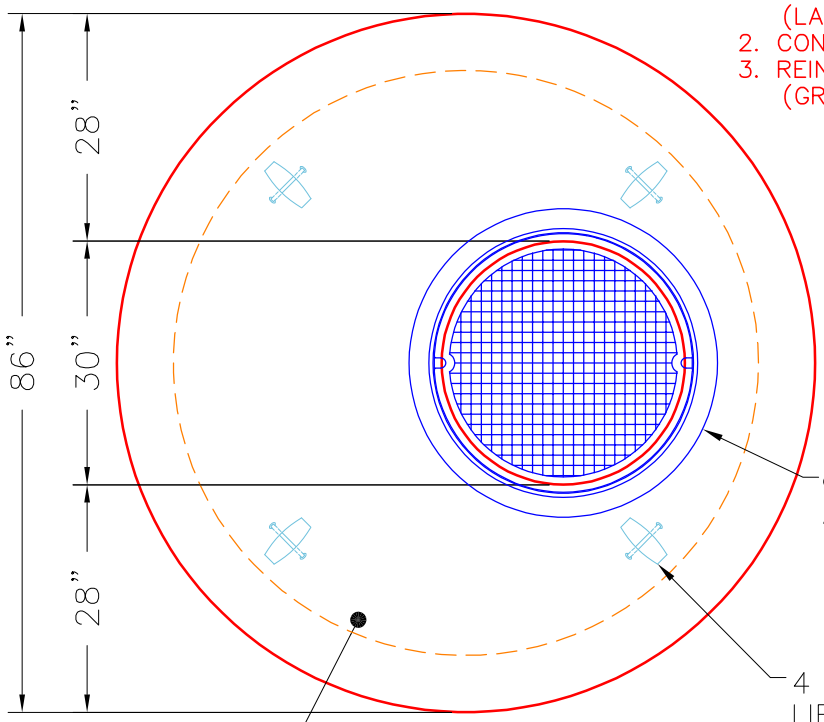

TOP VIEW

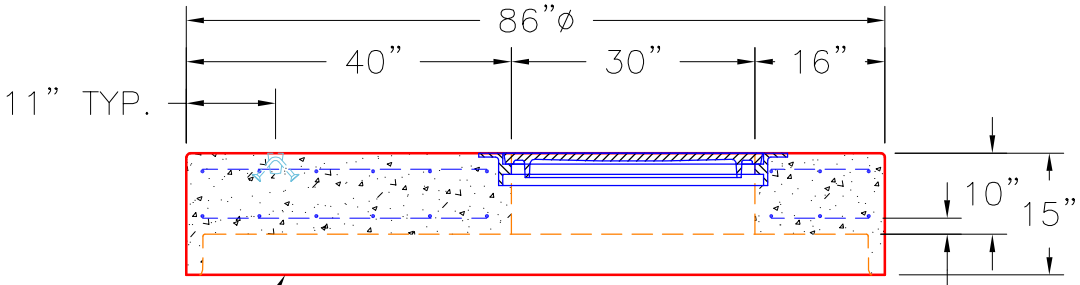

FRONT VIEW

Coating (Int): Coating (Ext):	Seam Up: Flat Seam Dn: Groove	Wall Thickness: 7"	Height (Ext): 15"	Weight (Net): 4663 lb Volume (Net): 1.19cu.yd

Job Name: 26-1066 - Gunning Pump Station & Force Main Job Location: Bardstown, KY Contractor: Connhurst, LLC	Plant: 100 6/2/2026 10:56:16 AM	Tech: Jared - F PC: E. Bradley	

Structure ID: V V (16)

P2 MH096LD17S **MH FLAT TOP w/48"x48" Hatch F/G**

P3) 48" x 48" - CASTING HEIGHT - 0"	0 lb
P2) 96" - MH FLAT TOP w/48"x48" Hatch F/G - 17"	8607 lb
P1) 96" - MH BASE EF Cust. Ht. 08"F (14"EF =142"OD) T/n - 73"	28510 lb
1) JOINT WRAP - 0.065"x6"x50' CONSEAL CS212	0 lb
1) JOINT WRAP PRIMER - CONSEAL CS-75 (1 gal.)	0 lb
1) 96" - Conseal CS-102 1.00" (Double)	0 lb
1) 48" x 48" - Conseal CS-102 1.00" (Double)	0 lb
3) Hole - 12	0 lb
1) PSX - 8QRS DD	6 lb
Structure Total:	37124 lb

Structure Notes: .
1. PER ASTM C478 SPECIFICATIONS.
2. CONCRETE = 4,000 PSI AT 28 DAYS.
3. NO STEPS.
4. HATCH SUPPLIED BY OTHERS.

.
REINFORCING PER ASTM A615 (GRADE 60).
- TOP SLAB (As .31) #5 BARS AT 6" C.C.E.W.
- RISER/WALLS (As .18)
- FLOOR (As .37) #5 BARS AT 10" C.C.E.W.(DOUBLE MAT)

NOTES:
1. PER ASTM C-478 LATEST REVISION
2. CONCRETE: 4,000 PSI AT 28 DAYS.
3. REINFORCEMENT:
   TOP SLAB – #5 BAR @ 6" C.C.E.W.
   PER ASTM A615 (GRADE 60)
4. JOINT SEALANT – 1" CS-102-DOUBLE
5. HATCH: 48"X48" HATCH SUPPLIED BY OTHERS.
6. HATCH TO BE CAST INTO TOP SLAB BY ICAST

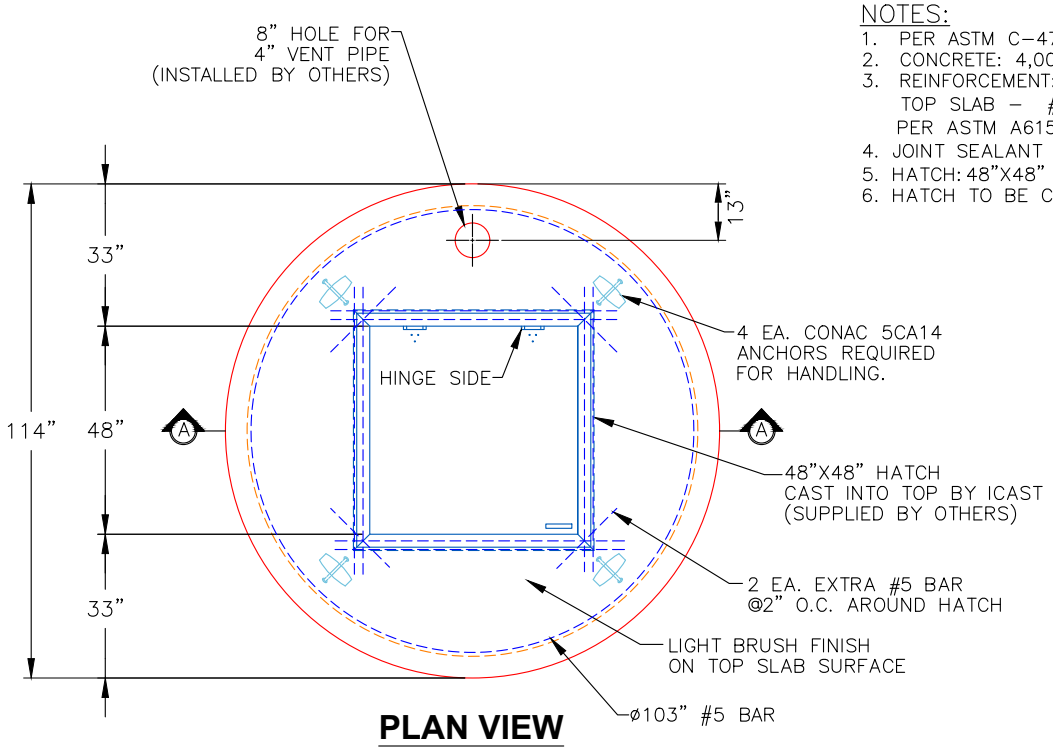

PLAN VIEW

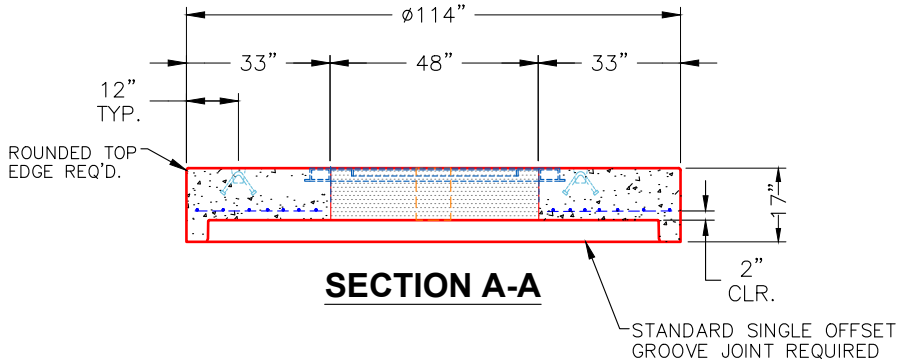

SECTION A-A

Coating (Int): Coating (Ext):	Seam Up: Flat Seam Dn: Groove	Wall Thickness: 9"	Height (Ext): 17"	Weight (Net): 8607 lb Volume (Net): 2.2cu.yd

Job Name: 26-1066 - Gunning Pump Station & Force Main Job Location: Bardstown, KY Contractor: Connhurst, LLC	Plant: 100 6/2/2026 10:56:58 AM	Tech: Jared - F PC: E. Bradley	

Structure ID: W W (15)

P3 MH096RS96 MH RISER T/G

P6) 36" x 72" - HATCH (CAST FLUSH) - 0"	100 lb
P5) 96" - MH FLAT TOP w/36"x72" Hatch F/G - 17"	8315 lb
P4) 96" - MH RISER T/G - 36"	8968 lb
P3) 96" - MH RISER T/G - 96"	23694 lb
P2) 96" - MH RISER T/G - 84"	20688 lb
P1) 96" - MH BASE EF Cust. Ht. 12"F (14"EF =142"OD) T/n - 79"	35627 lb
1) JOINT WRAP - 12" WD x 096" MAC WRAP	0 lb
1) SPECIAL Internal Coating	0 lb
4) 96" - Conseal CS-231 1.00" (Double)	0 lb
1) 36" x 72" - Conseal CS-231 1.00" (Double)	0 lb
2) Hole - 12	0 lb
1) PSX - 8QRS DD	6 lb
1) PSX - 16M DD	8 lb
1) PSX - 12M DD	8 lb

Structure Total:	97415 lb

Rim: 559' Rim to Invert: 17.3' Slack: 0" Sump: 104.4" Step Position:

Structure Notes: .
1. PER ASTM C478 SPECIFICATIONS.
2. CONCRETE = 4,000 PSI AT 28 DAYS.
3. NO STEPS AND NO INVERT CHANNEL.
4. HATCH SUPPLIED BY OTHERS.
5. INSIDE OF STRUCTURE TO BE SANDBLASTED,THEN A COATING OF TNEMEC 218 TO BE APPLIED, FOLLOWED BY A COATING OF TNEMEC 434, FOLLOWED BY A COATING OF TNEMEC 435.

.
REINFORCING PER ASTM A615 (GRADE 60).
- TOP SLAB (As .31) #5 BARS AT 6" C.C.E.W.
- RISER/WALLS (As .18)
- FLOOR (As .37) #5 BARS AT 10" C.C.E.W. (DOUBLE MAT)

Position	Elev	Angle	Ext. (cw)	Pipe	Pipe OD	Connector	Hole	Horz Size	Up (_)	Offset
Invert 1	553.25'	0°	-18.5"	8" DI	9"	Hole 12	12"	13.019"	73"	-18.125"
Invert 2	553.25'	0°	18.5"	8" DI	9"	Hole 12	12"	13.019"	73"	18.125"
Invert 3	551.3'	0°	0"	3" PVC SDR35	3.25"	PSX 8QRS DD	8"	8.009"	49.125"	0"
Invert 4										
Invert 5										
Invert 6										
Invert 7										
Invert 8										

RIGHT-SIDE UP VIEW (int. dimensions)

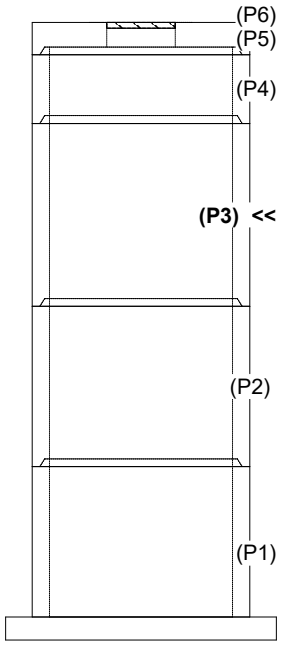

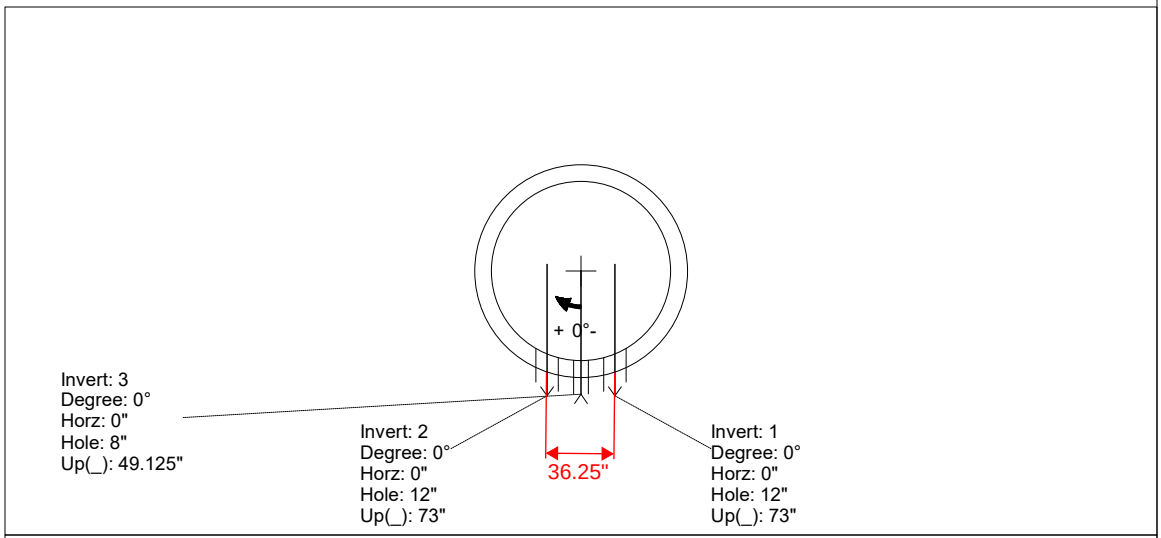

INSIDE WALL DIMENSIONS

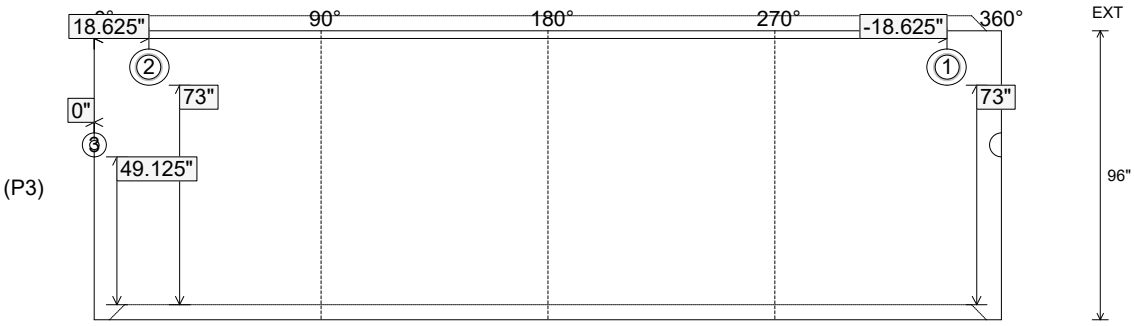

Coating (Int): Coating (Ext):	Seam Up: Tongue Seam Dn: Groove	Wall Thickness: 9" Floor Height: 0"	Height (Int): 96" Height (Ext): 96"	Weight (Net): 23694 lb Volume (Net): 6.05cu.yd

GENERAL NOTES:

1. PER SECTION 605 OF KYTC STANDARD SPECS FOR ROAD & BRIDGE CONSTRUCTION
   - KYTC STAMP REQUIRED
   - WEEP HOLES REQUIRED
2. LOAD REQUIREDMENTS: KY-HL93 (KY TABLE 1)
3. REINFORCEMENT PER ATTACHED KYTC TABLE 1
4. COVER DEPTH: 10'
5. CONCRETE: 5,000 PSI AT 28 DAYS
6. JOINT SEALANT: 1" BUTYL MASTIC (CS-102)
   EXTERIOR JOINT WRAP: 12" WIDE (CS-212)
7. WEIGHT: 8' X 6' RCBC = 3,138 LBS / LF
   (5'-9" LONG SECTION = 18,044 LBS)

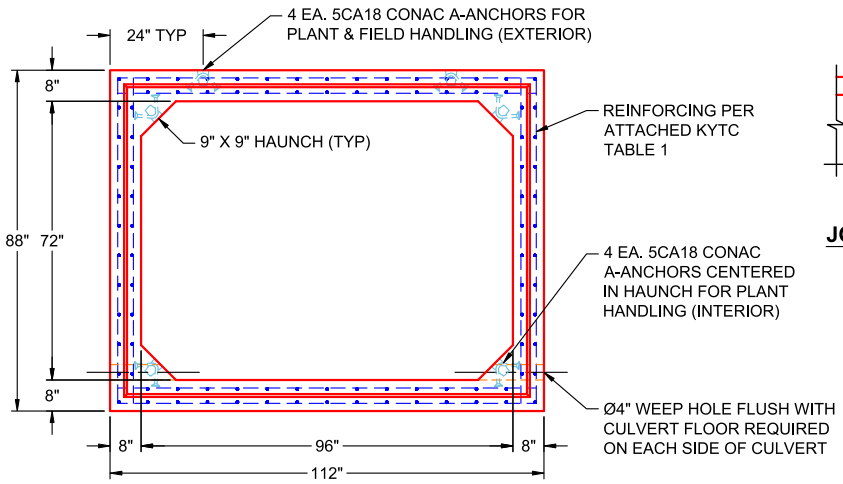

END VIEW
TYPICAL

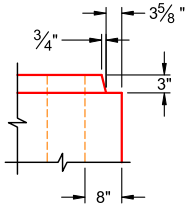

JOINT DETAIL (TYP)
NTS

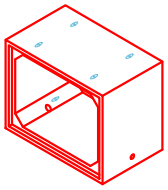

COMPONENT ISOMETRIC VIEW

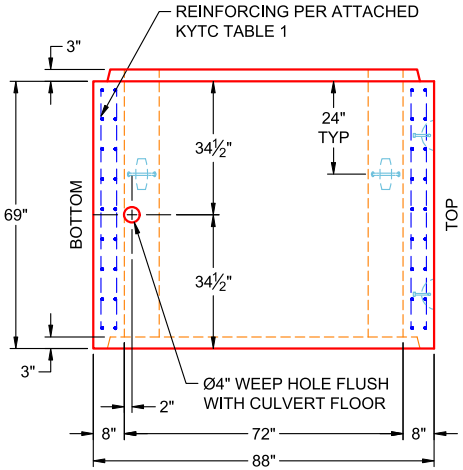

VIEW A
PC 17
(UPRIGHT IN MOLD)

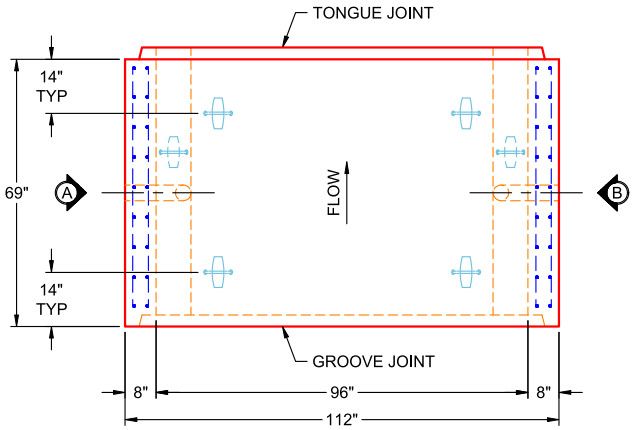

PLAN VIEW
PC 17
(UPRIGHT IN MOLD)

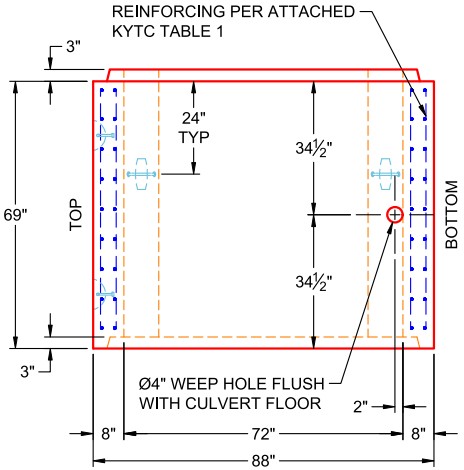

VIEW B
PC 17
(UPRIGHT IN MOLD)

PRODUCTION WORK ORDER	PRODUCT I.D.: BC096072-08WLF-9H	DESCRIPTION: 96" X 72" X 69" BOX CULVERT (8" WALLS & 9" HAUNCH)	
QUALITY CONTROL CHECKLIST	PRODUCT VIEW: RIGHT SIDE UP	CUSTOMER: JIM SMITH CONTRACTING	
☐ ALL DIMENSIONS CORRECT.	PLANT: BEAVER DAM, KY	PROJECT: KYTC MCCRACKEN CO. CALL 200 (ID 241301)	
☐ LIFTERS INSTALLED INSIDE.	WEIGHT: 18,044 LBS	STRUCTURE: ST. 43+62 (PC 17)	
☐ RECESS WITH HAUNCHES CORRECT.	TOP SECTION JOINT: TONGUE	ORDER NO: 24-1643B	
☐ REINFORCING CORRECT.	BASE SECTION JOINT: GROOVE	PE: J.H. ROSS	DRAWING: K. CARDWELL
☐ SURFACE QUALITY ACCEPTABLE.	QC CHECK INITIALS:	DATE: 05/28/26	SCALE: NTS / PG. 1 OF 1
☐ LIFTERS INSTALLED OUTSIDE.			
☐ PRODUCT SQUARE.			

THIS DRAWING IS THE PROPERTY OF INFRASTRUCTURE PRECAST, INC. ANY USE OR DUPLICATION OF THIS DRAWING WITHOUT PRIOR AUTHORIZATION IS STRICTLY PROHIBITED.

Job Name: 24-1643B - KYTC McCracken Co. Call 200 (ID 241301)
Job Location: Paducah, KY
Contractor: Jim Smith Contracting Co, LLC

Structure ID: St. 43+62 (PC 17)

P1 BC096072-08WLF-9HC BOX CULVERT (08W/08F/08T) G/T

Plant: 100
5/28/2026 7:51:20 AM
Tech: J. Horsley
PC: C. Goff

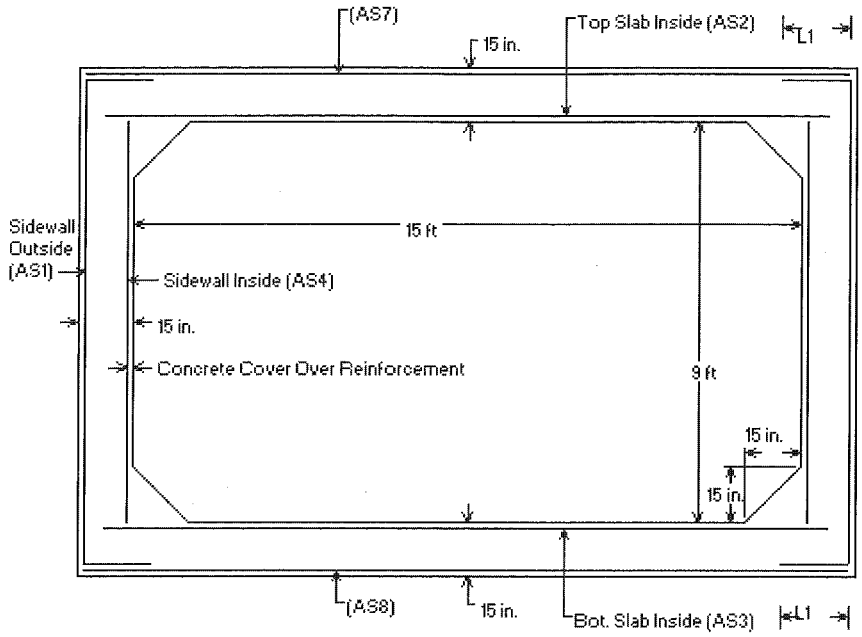

* <L1> is Splice Length
* (AS7) is Top Slab Outside
* (AS8) is Bottom Slab Outside
* See Box Culvert Design Summary Sheet for transverse and distribution reinforcement, as required.
* For sidewall thicknesses of 6 in. and above, extend AS2 and AS3 a min. of 4 in. beyond the inside face of the sidewall. For thicknesses less than 6 in., extend AS2 and AS3 at least to within 1-1/2 in. of the outside face of the sidewall.

Notes:

1) Other reinforcement schemes that provide the required reinforcement areas at all locations identified in the program output are acceptable.
2) Longitudinal reinforcement is not shown for clarity, see AASHTO M259 for longitudinal reinforcement and for additional requirements.

KY Table 1

Precast Culvert KYHL-93 Design Table

	Design Earth Cover, ft	As1	As2	As3	As4	As7	As8	As5	As6
8x6x8	0<2	0.267	0.536	0.382	0.192	0.192	0.192	0.192	0.192
	2<3	0.266	0.458	0.382	0.192	0.192	0.192	0.192	0.192
	3-5	0.237	0.392	0.359	0.192	0.192	0.192		
	10	0.244	0.365	0.38	0.192	0.192	0.192		
	15	0.321	0.489	0.505	0.192	0.192	0.192		
	20	0.408	0.627	0.644	0.192	0.192	0.192		
	25	0.502	0.774	0.791	0.192	0.192	0.192		
	30	0.602	0.928	0.946	0.192	0.192	0.192		
	35	0.708	1.089	1.108	0.192	0.192	0.192		

	Design Earth Cover, ft	As1	As2	As3	As4	As7	As8	As5	As6
8x7x8	0<2	0.245	0.557	0.403	0.192	0.192	0.192	0.197	0.192
	2<3	0.243	0.479	0.403	0.192	0.192	0.192	0.192	0.192
	3-5	0.215	0.409	0.378	0.192	0.192	0.192		
	10	0.225	0.378	0.396	0.192	0.192	0.192		
	15	0.295	0.507	0.526	0.192	0.192	0.192		
	20	0.374	0.651	0.671	0.192	0.192	0.192		
	25	0.459	0.804	0.825	0.192	0.192	0.192		
	30	0.549	0.965	0.987	0.192	0.192	0.192		
	35	0.644	1.134	1.157	0.192	0.192	0.192		

	Design Earth Cover, ft	As1	As2	As3	As4	As7	As8	As5	As6
8x8x8	0<2	0.226	0.575	0.42	0.192	0.192	0.192	0.203	0.192
	2<3	0.224	0.494	0.42	0.192	0.192	0.192	0.192	0.192
	3-5	0.201	0.423	0.393	0.192	0.192	0.192		
	10	0.211	0.386	0.407	0.192	0.192	0.192		
	15	0.276	0.518	0.54	0.192	0.192	0.192		
	20	0.349	0.665	0.688	0.192	0.192	0.192		
	25	0.427	0.822	0.846	0.192	0.192	0.192		
	30	0.51	0.988	1.013	0.192	0.192	0.192		

Default Configuration (page 1)

Default Parameters

Data Directory: c:

Jeremiah.Littleton
Documents
BOXCAR3.1

○ SI Unit File ◉ Customary US Unit File

Section Length 8 ft

Box Geometry

	SPAN < / ft				SPAN > / ft			
Top Slab Thickness	{Span/	12	+ 1 }	in.	{Span/	12	+ 0 }	in.
Bottom Slab Thickness	{Span/	12	+ 1 }	in.	{Span/	12	+ 0 }	in.
Sidewall Thickness	{Span/	12	+ 1 }	in.	{Span/	12	+ 0 }	in.
Horizontal Haunch Length	{Span/	12	+ 1 }	in.	{Span/	12	+ 0 }	in.
Vertical Haunch Length	{Span/	12	+ 1 }	in.	{Span/	12	+ 0 }	in.

Clear Concrete Covers

Top Slab Outside Face	2	in.	(MINIMUM DEPTH OF FILL < 2 ft)
Top Slab Outside Face	1	in.	(MINIMUM DEPTH OF FILL >= 2 ft)
Bottom Slab Outside Face	1	in.	
Sidewall Outside Face	1	in.	
Top Slab Inside Face	1	in.	
Bottom Slab Inside Face	1	in.	
Sidewall Inside Face	1	in.	

Reinforcement Type: Welded Wire

Material Properties

Main Reinforcement Yield Strength	65000	psi
Design Concrete Strength	5000	psi
Concrete Unit Weight	150	pcf
Stirrup Reinforcement Developable Yield Stress	60000	psi
Total Service Stress Limit	100	%

Restore Default Settings

Next Page >> | Return to Main Menu

Default Configuration (page 2)

Design Code: AASHTO - LRFD

Strength Reduction Factors

Design Code

Flexure	1
Shear	0.9

Axial Thrust Load Factor: User Specified 1

Crack Width (CHBDC Only) 0.25 mm

Reinforcement Diameter

		Diameter				Maximum Spacing	
Sidewall Outside	(AS1)	{ 0.05	* Sidewall Thickness	+ 0 }	in.	4	in.
Top Inside	(AS2)	{ 0.05	* Top Slab Thickness	+ 0 }	in.	4	in.
Bottom Inside	(AS3)	{ 0.05	* Bottom Slab Thickness	+ 0 }	in.	4	in.
Sidewall Inside	(AS4)	{ 0.05	* Sidewall Thickness	+ 0 }	in.	4	in.
Top Outside	(AS7)	{ 0.05	* Top Slab Thickness	+ 0 }	in.	4	in.
Bottom Outside	(AS8)	{ 0.05	* Bottom Slab Thickness	+ 0 }	in.	4	in.

Soil Load Data

Soil Unit Weight	120	pcf
Minimum Lateral Pressure Coefficient	0.25	
Maximum Lateral Pressure Coefficient	0.5	

Vertical Arching Factor: Embankment/Compacted

<<Previous Page | Next Page >> | Return to Main Menu

Boxcar - Default (page 3) [illegible]

Live Load Data

Live Load Type (Max 2)	Magnitude (N)		Footprint	User Specified (Not by Code) Length		Width	
☑ HS-Series	25	tons	☑ By Code	10	in.	20	in.
☑ Interstate/Tandem	25	kips	☑ By Code	10	in.	20	in.
☐ Cooper Series	80	kips	☑ By Code	0	in.	0	in.
☐ CHBDC Truck	140	kips	☑ By Code	10	in.	24	in.
☐ Tandem/Tridem	140	kips	☐ By Code	10	in.	20	in.
☐ Other	10	kips	☐ By Code	10	in.	20	in.
☐ None							

Direction of Traffic: Parallel To Span

Impact Factor Options: Design Code

Impact Factor (User Def) 1

Lane Load 0 lb/ft

Live Load Distribution Factor (LLDF): Design Code 1.15

Interstate/Tandem Truck Wheel Layout

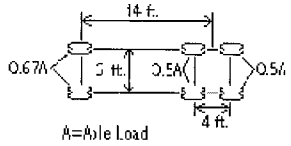

Fluid Loads

Depth of Fluid	1	* Rise
Fluid Unit Weight	62.5	pcf

Surcharge Loads

Uniform Vertical	0	lb/ft
Lateral - Top of Culvert (LLTC)	90	lb/ft
Lateral - Bottom of Culvert (LLBC)	90	lb/ft

<<Previous Page | Next Page >> | Return to Main Menu

Job Name: 26-1645 East Bank Regional ARV's Job Location: Nashville, TN Contractor: Garney Companies, Inc.	Plant: Beaver Dam 6/26/2026 12:31:54 PM	Tech: S. Felletter PC: J. Jarvis	

Structure ID: 3 - ARV FOOTER 18" x 18" X 4"

P9 BLKCSTM FOOTING SLAB 18"x18"x4" - 4" - 18" x 18"

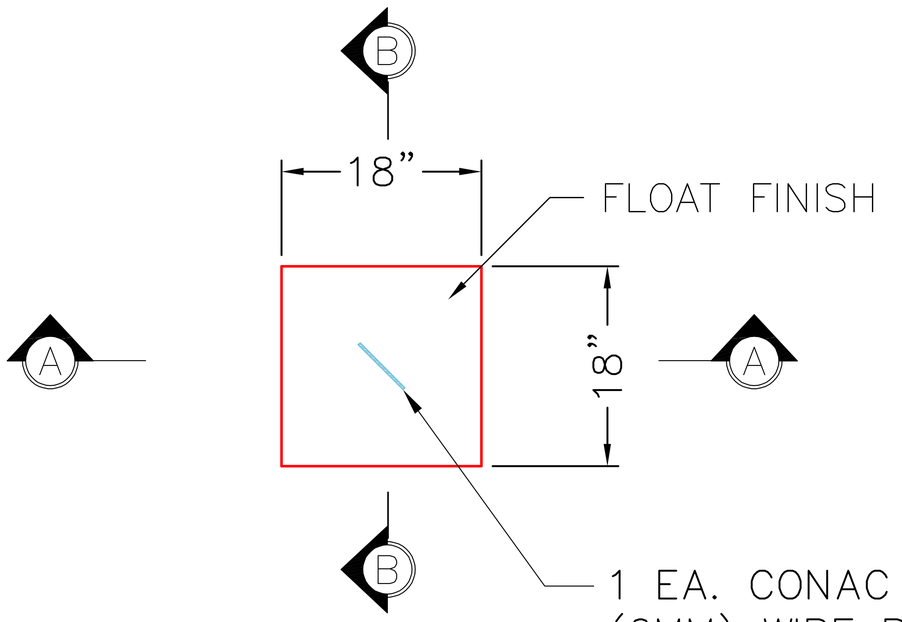

PLAN VIEW

GENERAL NOTES:

1. MANUFACTURED TO ASTM C–913 (LATEST REVISION).
2. CONCRETE: 5,000 PSI AT 28 DAYS.
3. REINFORCING: AS SHOWN BELOW(GRADE 60).
4. WEIGHTS: 113 LBS. EACH

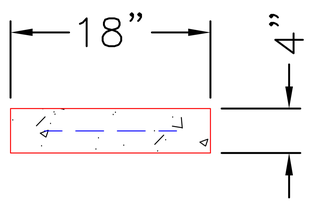

SECTION A-A

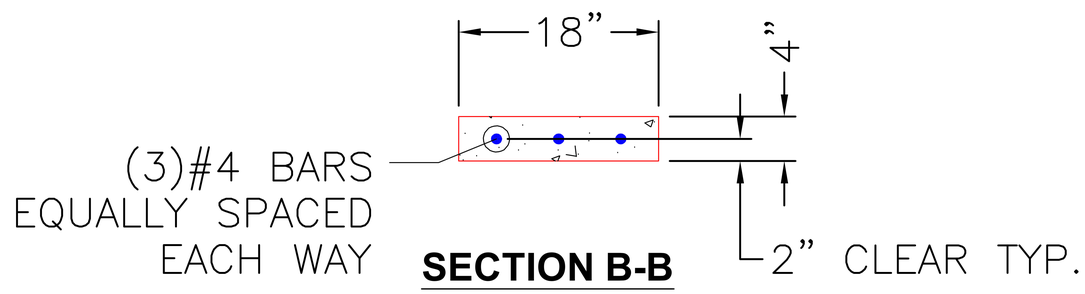

SECTION B-B

PRODUCTION WORK ORDER	PRODUCT I.D.: BLKCSTM	DESCRIPTION: FOOTING SLAB 18" X 18" X 4"	
QUALITY CONTROL CHECKLIST	PRODUCT VIEW: RIGHT SIDE UP	CUSTOMER: GARNEY COMPANIES INC	
☐ ALL DIMENSIONS CORRECT.	PLANT: BEAVER DAM, KY.	PROJECT: EAST BANK REGIONAL ARV'S	
☐ LIFTERS INSTALLED.	WEIGHT: 113 LBS.	STRUCTURE: ARV FOOTER	
☐ HATCH CORRECT LOCATION.	TOP SECTION JOINT: N/A	ORDER NO: 26–2640	
☐ REINFORCING CORRECT.	BASE SECTION JOINT: N/A	PC: T. RYAN	DRAWING: S. FELLETTER
☐ SURFACE QUALITY ACCEPTABLE.	QC CHECK INITIALS:	DATE: 06/25/26	SCALE: NTS / PG. 1 of 1
☐ EDGES CHAMFERED.			
☐ ALL PATCHWORK ACCEPTABLE.			

THIS DRAWING IS THE PROPERTY OF INFRASTRUCTURE PRECAST, INC. ANY USE OR DUPLICATION OF THIS DRAWING WITHOUT PRIOR AUTHORIZATION IS STRICTLY PROHIBITED.

Job Name: 26-1645 East Bank Regional ARV's Job Location: Nashville, TN Contractor: Garney Companies, Inc.	Plant: Beaver Dam 6/26/2026 12:31:54 PM	Tech: S. Felletter PC: J. Jarvis	

Structure ID: 3 - ARV FOOTER 18" x 18" X 4"

P8 BLKCSTM FOOTING SLAB 18"x18"x4" - 4" - 18" x 18"

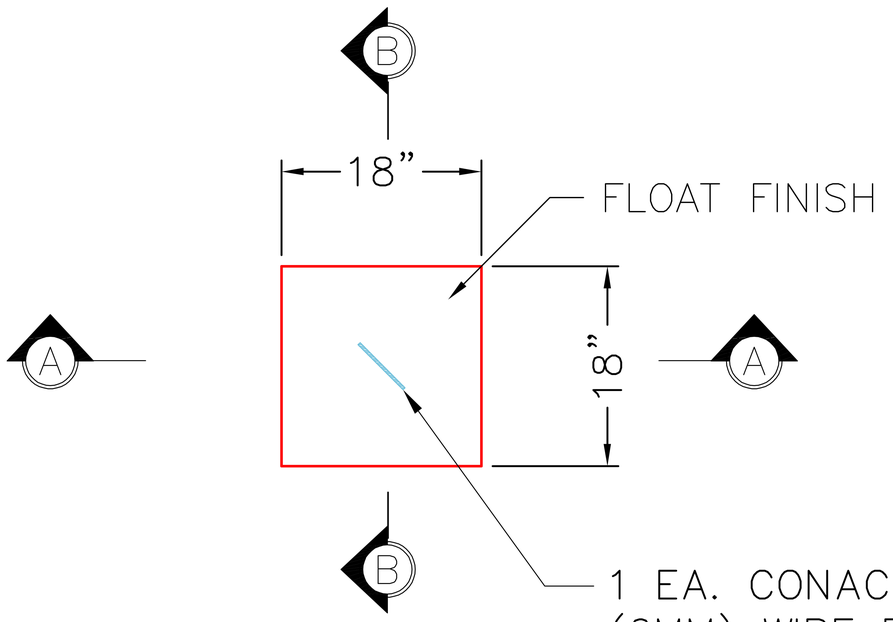

PLAN VIEW

GENERAL NOTES:

1. MANUFACTURED TO ASTM C–913 (LATEST REVISION).
2. CONCRETE: 5,000 PSI AT 28 DAYS.
3. REINFORCING: AS SHOWN BELOW(GRADE 60).
4. WEIGHTS: 113 LBS. EACH

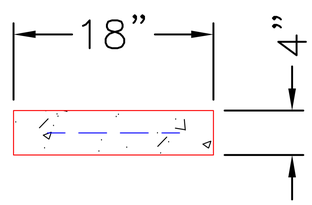

SECTION A-A

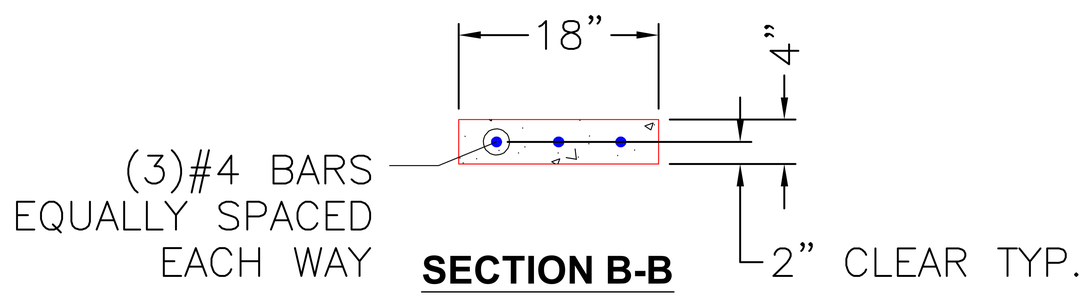

SECTION B-B

PRODUCTION WORK ORDER	PRODUCT I.D.: BLKCSTM	DESCRIPTION: FOOTING SLAB 18" X 18" X 4"	
QUALITY CONTROL CHECKLIST	PRODUCT VIEW: RIGHT SIDE UP	CUSTOMER: GARNEY COMPANIES INC	
☐ ALL DIMENSIONS CORRECT.	PLANT: BEAVER DAM, KY.	PROJECT: EAST BANK REGIONAL ARV'S	
☐ LIFTERS INSTALLED.	WEIGHT: 113 LBS.	STRUCTURE: ARV FOOTER	
☐ HATCH CORRECT LOCATION.	TOP SECTION JOINT: N/A	ORDER NO: 26–2640	
☐ REINFORCING CORRECT.	BASE SECTION JOINT: N/A	PC: T. RYAN	DRAWING: S. FELLETTER
☐ SURFACE QUALITY ACCEPTABLE.	QC CHECK INITIALS:	DATE: 06/25/26	SCALE: NTS / PG. 1 of 1
☐ EDGES CHAMFERED.			
☐ ALL PATCHWORK ACCEPTABLE.			

THIS DRAWING IS THE PROPERTY OF INFRASTRUCTURE PRECAST, INC. ANY USE OR DUPLICATION OF THIS DRAWING WITHOUT PRIOR AUTHORIZATION IS STRICTLY PROHIBITED.

Job Name: 26-1645 East Bank Regional ARV's Job Location: Nashville, TN Contractor: Garney Companies, Inc.	Plant: Beaver Dam 6/26/2026 12:31:53 PM	Tech: S. Felletter PC: J. Jarvis	

Structure ID: 3 - ARV FOOTER 18" x 18" X 4"

P7 BLKCSTM FOOTING SLAB 18"x18"x4" - 4" - 18" x 18"

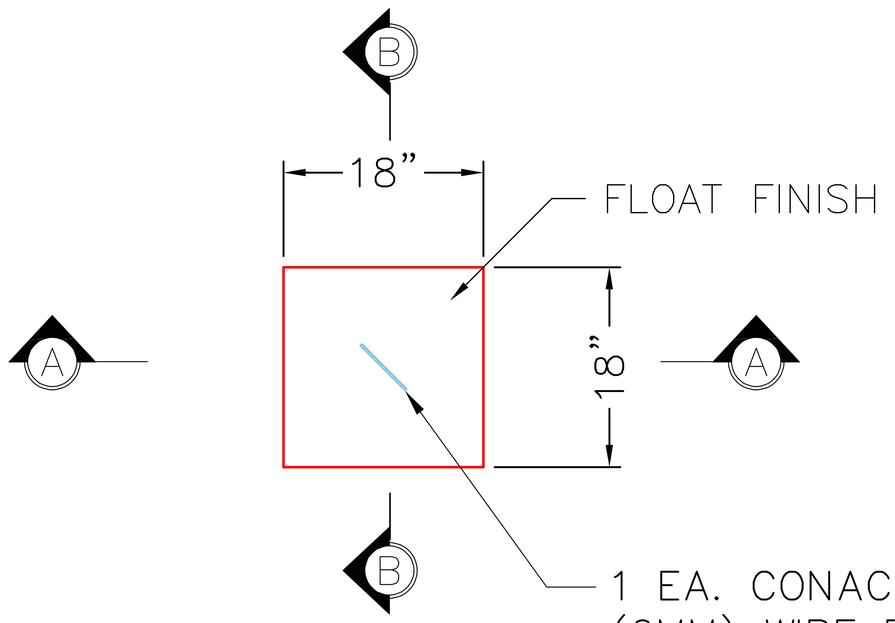

PLAN VIEW

GENERAL NOTES:

1. MANUFACTURED TO ASTM C–913 (LATEST REVISION).
2. CONCRETE: 5,000 PSI AT 28 DAYS.
3. REINFORCING: AS SHOWN BELOW(GRADE 60).
4. WEIGHTS: 113 LBS. EACH

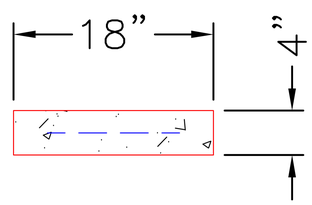

SECTION A-A

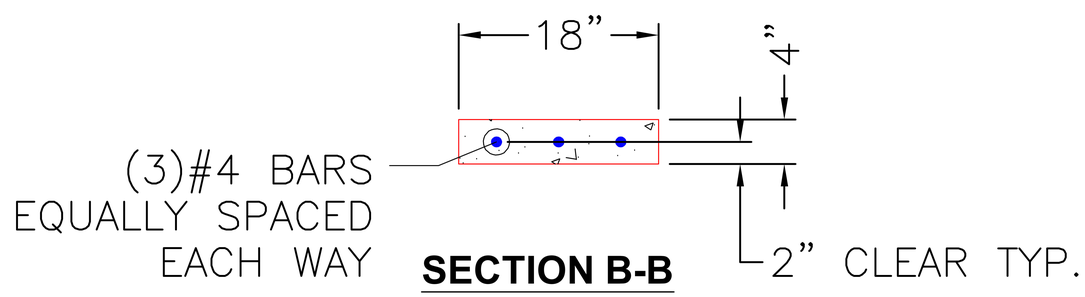

SECTION B-B

PRODUCTION WORK ORDER	PRODUCT I.D.: BLKCSTM	DESCRIPTION: FOOTING SLAB 18" X 18" X 4"	
QUALITY CONTROL CHECKLIST	PRODUCT VIEW: RIGHT SIDE UP	CUSTOMER: GARNEY COMPANIES INC	
☐ ALL DIMENSIONS CORRECT.	PLANT: BEAVER DAM, KY.	PROJECT: EAST BANK REGIONAL ARV'S	
☐ LIFTERS INSTALLED.	WEIGHT: 113 LBS.	STRUCTURE: ARV FOOTER	
☐ HATCH CORRECT LOCATION.	TOP SECTION JOINT: N/A	ORDER NO: 26–2640	
☐ REINFORCING CORRECT.	BASE SECTION JOINT: N/A	PC: T. RYAN	DRAWING: S. FELLETTER
☐ SURFACE QUALITY ACCEPTABLE.	QC CHECK INITIALS:	DATE: 06/25/26	SCALE: NTS / PG. 1 of 1
☐ EDGES CHAMFERED.			
☐ ALL PATCHWORK ACCEPTABLE.			

THIS DRAWING IS THE PROPERTY OF INFRASTRUCTURE PRECAST, INC. ANY USE OR DUPLICATION OF THIS DRAWING WITHOUT PRIOR AUTHORIZATION IS STRICTLY PROHIBITED.

Job Name: 26-1645 East Bank Regional ARV's Job Location: Nashville, TN Contractor: Garney Companies, Inc.	Plant: Beaver Dam 6/26/2026 12:31:53 PM	Tech: S. Felletter PC: J. Jarvis	

Structure ID: 3 - ARV FOOTER 18" x 18" X 4"

P6 BLKCSTM FOOTING SLAB 18"x18"x4" - 4" - 18" x 18"

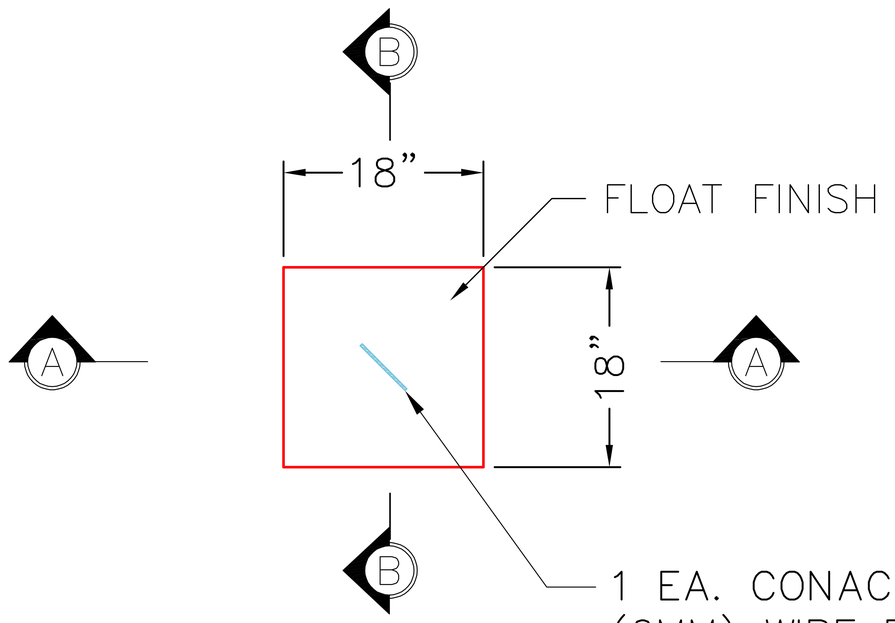

PLAN VIEW

GENERAL NOTES:

1. MANUFACTURED TO ASTM C–913 (LATEST REVISION).
2. CONCRETE: 5,000 PSI AT 28 DAYS.
3. REINFORCING: AS SHOWN BELOW(GRADE 60).
4. WEIGHTS: 113 LBS. EACH

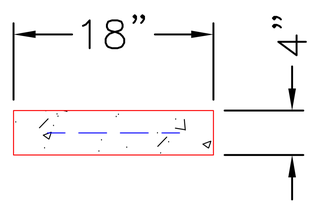

SECTION A-A

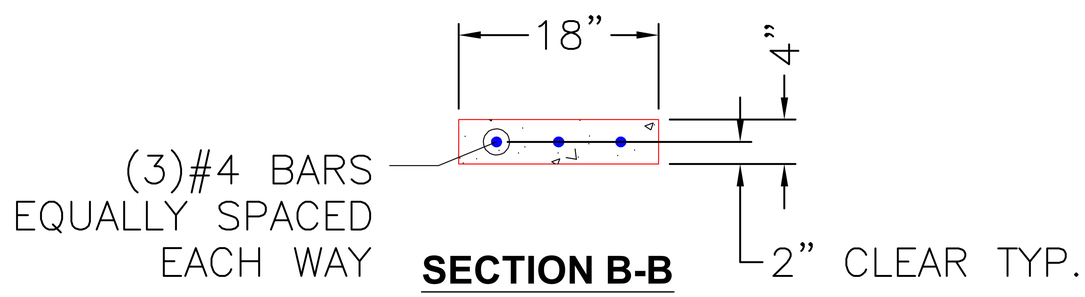

SECTION B-B

PRODUCTION WORK ORDER	PRODUCT I.D.: BLKCSTM	DESCRIPTION: FOOTING SLAB 18" X 18" X 4"	
QUALITY CONTROL CHECKLIST	PRODUCT VIEW: RIGHT SIDE UP	CUSTOMER: GARNEY COMPANIES INC	
☐ ALL DIMENSIONS CORRECT.	PLANT: BEAVER DAM, KY.	PROJECT: EAST BANK REGIONAL ARV'S	
☐ LIFTERS INSTALLED.	WEIGHT: 113 LBS.	STRUCTURE: ARV FOOTER	
☐ HATCH CORRECT LOCATION.	TOP SECTION JOINT: N/A	ORDER NO: 26–2640	
☐ REINFORCING CORRECT.	BASE SECTION JOINT: N/A	PC: T. RYAN	DRAWING: S. FELLETTER
☐ SURFACE QUALITY ACCEPTABLE.	QC CHECK INITIALS:	DATE: 06/25/26	SCALE: NTS / PG. 1 of 1
☐ EDGES CHAMFERED.			
☐ ALL PATCHWORK ACCEPTABLE.			

THIS DRAWING IS THE PROPERTY OF INFRASTRUCTURE PRECAST, INC. ANY USE OR DUPLICATION OF THIS DRAWING WITHOUT PRIOR AUTHORIZATION IS STRICTLY PROHIBITED.

Job Name: 26-1645 East Bank Regional ARV's Job Location: Nashville, TN Contractor: Garney Companies, Inc.	Plant: Beaver Dam 6/26/2026 12:31:53 PM	Tech: S. Felletter PC: J. Jarvis	

Structure ID: 3 - ARV FOOTER 18" x 18" X 4"

P5 BLKCSTM FOOTING SLAB 18"x18"x4" - 4" - 18" x 18"

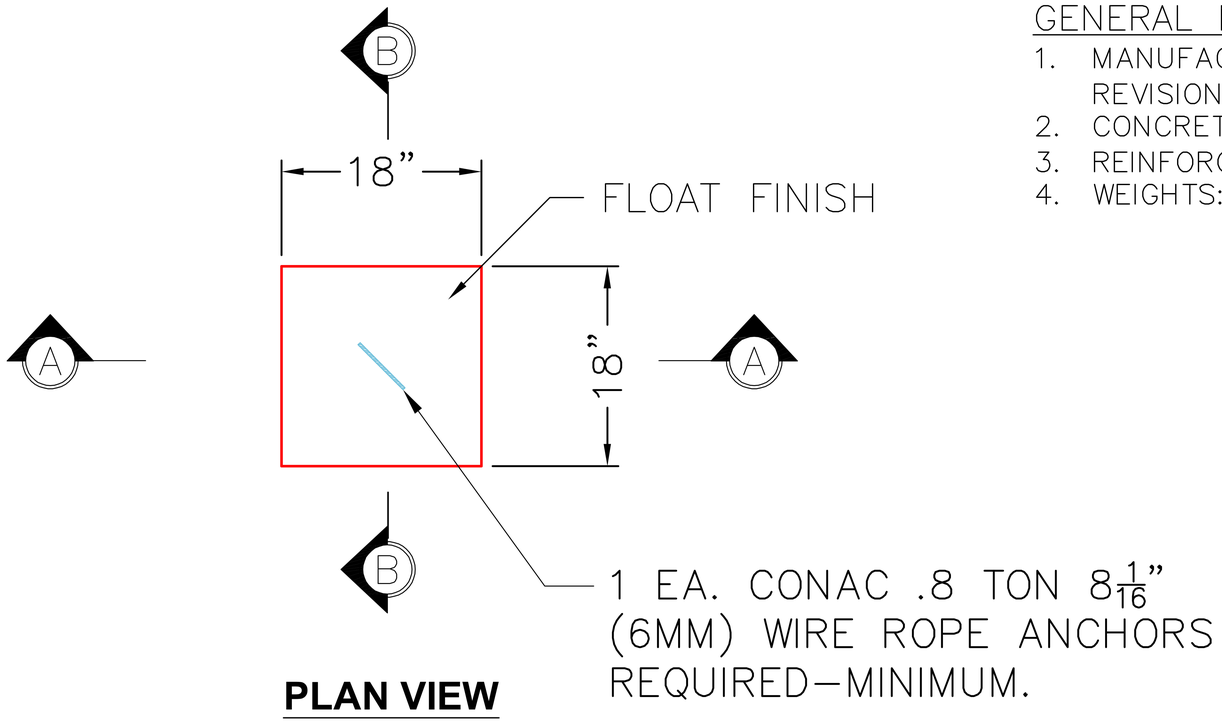

PLAN VIEW

GENERAL NOTES:

1. MANUFACTURED TO ASTM C–913 (LATEST REVISION).
2. CONCRETE: 5,000 PSI AT 28 DAYS.
3. REINFORCING: AS SHOWN BELOW(GRADE 60).
4. WEIGHTS: 113 LBS. EACH

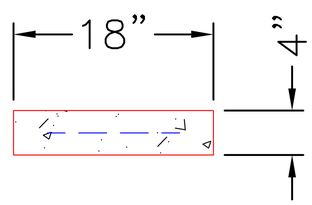

SECTION A-A

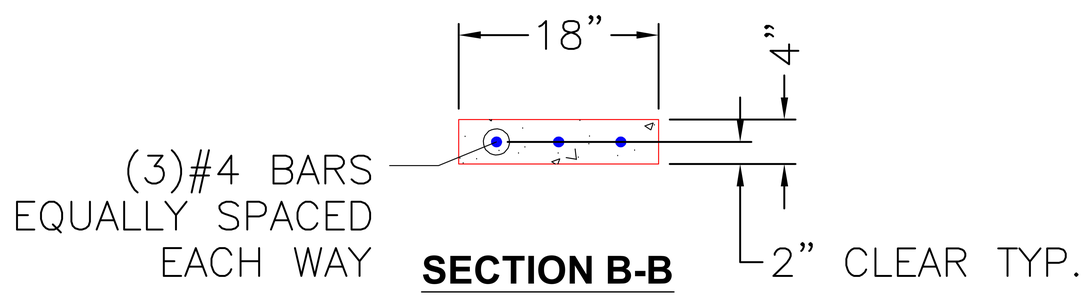

SECTION B-B

PRODUCTION WORK ORDER	PRODUCT I.D.: BLKCSTM	DESCRIPTION: FOOTING SLAB 18" X 18" X 4"	
QUALITY CONTROL CHECKLIST	PRODUCT VIEW: RIGHT SIDE UP	CUSTOMER: GARNEY COMPANIES INC	
☐ ALL DIMENSIONS CORRECT.	PLANT: BEAVER DAM, KY.	PROJECT: EAST BANK REGIONAL ARV'S	
☐ LIFTERS INSTALLED.	WEIGHT: 113 LBS.	STRUCTURE: ARV FOOTER	
☐ HATCH CORRECT LOCATION.	TOP SECTION JOINT: N/A	ORDER NO: 26–2640	
☐ REINFORCING CORRECT.	BASE SECTION JOINT: N/A	PC: T. RYAN	DRAWING: S. FELLETTER
☐ SURFACE QUALITY ACCEPTABLE.	QC CHECK INITIALS:	DATE: 06/25/26	SCALE: NTS / PG. 1 of 1
☐ EDGES CHAMFERED.			
☐ ALL PATCHWORK ACCEPTABLE.			

THIS DRAWING IS THE PROPERTY OF INFRASTRUCTURE PRECAST, INC. ANY USE OR DUPLICATION OF THIS DRAWING WITHOUT PRIOR AUTHORIZATION IS STRICTLY PROHIBITED.

Job Name: 26-1645 East Bank Regional ARV's Job Location: Nashville, TN Contractor: Garney Companies, Inc.	Plant: Beaver Dam 6/26/2026 12:31:52 PM	Tech: S. Felletter PC: J. Jarvis	

Structure ID: 3 - ARV FOOTER 18" x 18" X 4"

P4 BLKCSTM FOOTING SLAB 18"x18"x4" - 4" - 18" x 18"

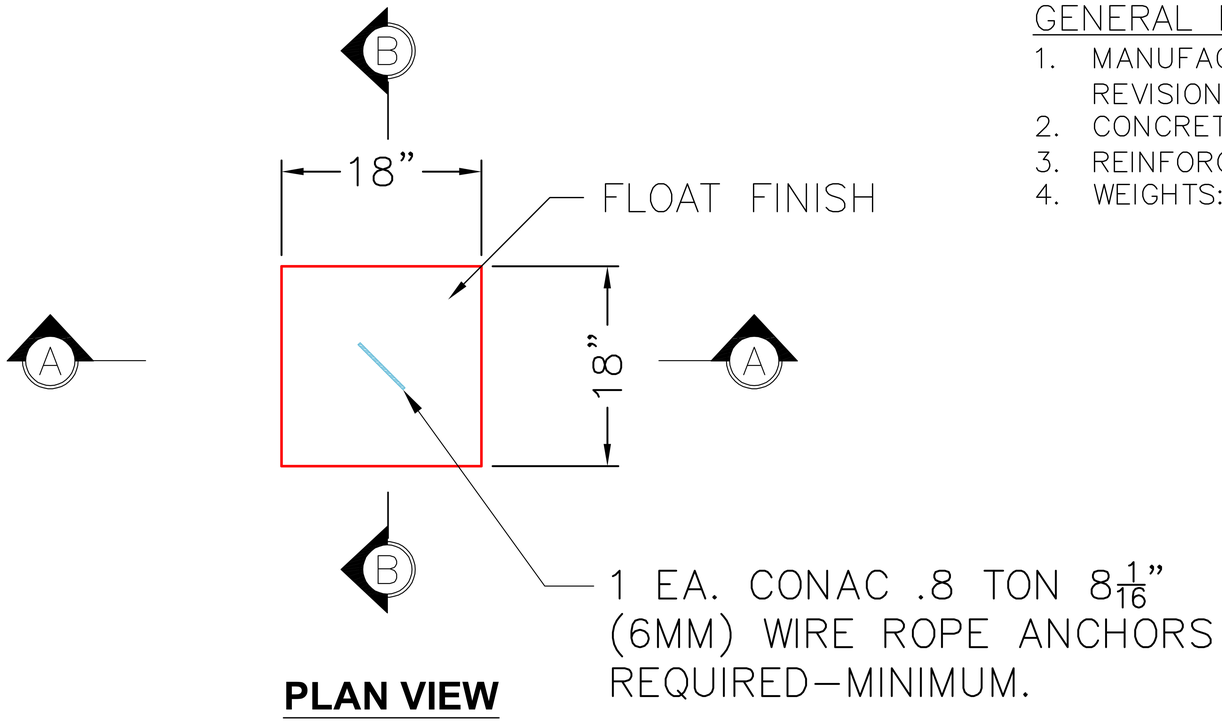

PLAN VIEW

GENERAL NOTES:

1. MANUFACTURED TO ASTM C–913 (LATEST REVISION).
2. CONCRETE: 5,000 PSI AT 28 DAYS.
3. REINFORCING: AS SHOWN BELOW(GRADE 60).
4. WEIGHTS: 113 LBS. EACH

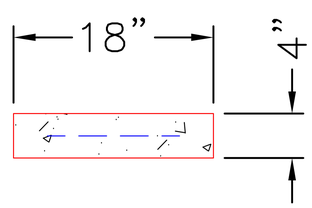

SECTION A-A

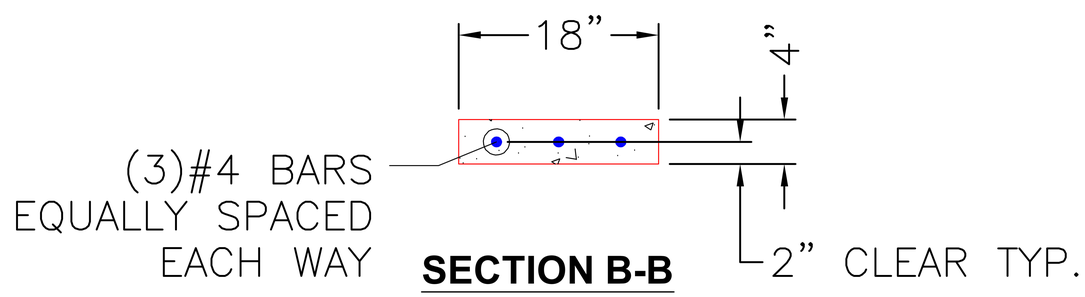

SECTION B-B

PRODUCTION WORK ORDER	PRODUCT I.D.: BLKCSTM	DESCRIPTION: FOOTING SLAB 18" X 18" X 4"	
QUALITY CONTROL CHECKLIST	PRODUCT VIEW: RIGHT SIDE UP	CUSTOMER: GARNEY COMPANIES INC	
☐ ALL DIMENSIONS CORRECT.	PLANT: BEAVER DAM, KY.	PROJECT: EAST BANK REGIONAL ARV'S	
☐ LIFTERS INSTALLED.	WEIGHT: 113 LBS.	STRUCTURE: ARV FOOTER	
☐ HATCH CORRECT LOCATION.	TOP SECTION JOINT: N/A	ORDER NO: 26–2640	
☐ REINFORCING CORRECT.	BASE SECTION JOINT: N/A	PC: T. RYAN	DRAWING: S. FELLETTER
☐ SURFACE QUALITY ACCEPTABLE.	QC CHECK INITIALS:	DATE: 06/25/26	SCALE: NTS / PG. 1 of 1
☐ EDGES CHAMFERED.			
☐ ALL PATCHWORK ACCEPTABLE.			

THIS DRAWING IS THE PROPERTY OF INFRASTRUCTURE PRECAST, INC. ANY USE OR DUPLICATION OF THIS DRAWING WITHOUT PRIOR AUTHORIZATION IS STRICTLY PROHIBITED.

Job Name: 26-1645 East Bank Regional ARV's Job Location: Nashville, TN Contractor: Garney Companies, Inc.	Plant: Beaver Dam 6/26/2026 12:31:52 PM	Tech: S. Felletter PC: J. Jarvis	

Structure ID: 3 - ARV FOOTER 18" x 18" X 4"

P3 BLKCSTM FOOTING SLAB 18"x18"x4" - 4" - 18" x 18"

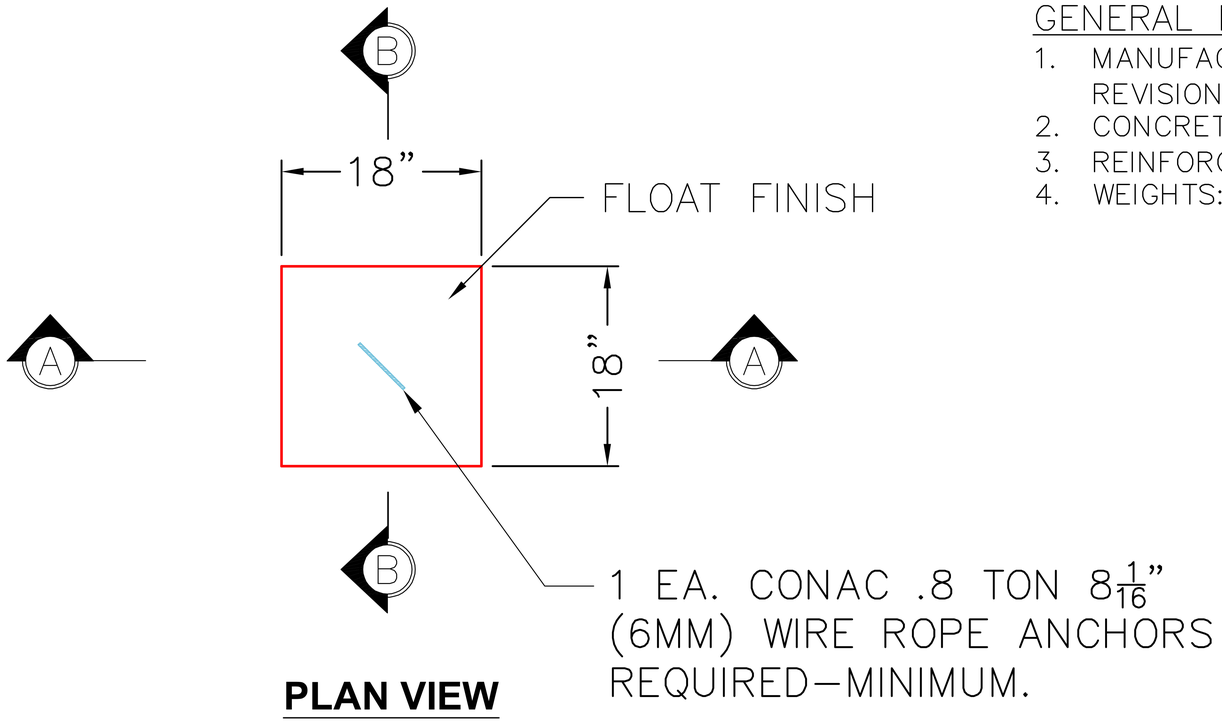

PLAN VIEW

GENERAL NOTES:

1. MANUFACTURED TO ASTM C–913 (LATEST REVISION).
2. CONCRETE: 5,000 PSI AT 28 DAYS.
3. REINFORCING: AS SHOWN BELOW(GRADE 60).
4. WEIGHTS: 113 LBS. EACH

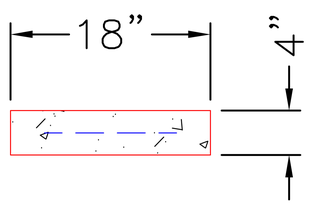

SECTION A-A

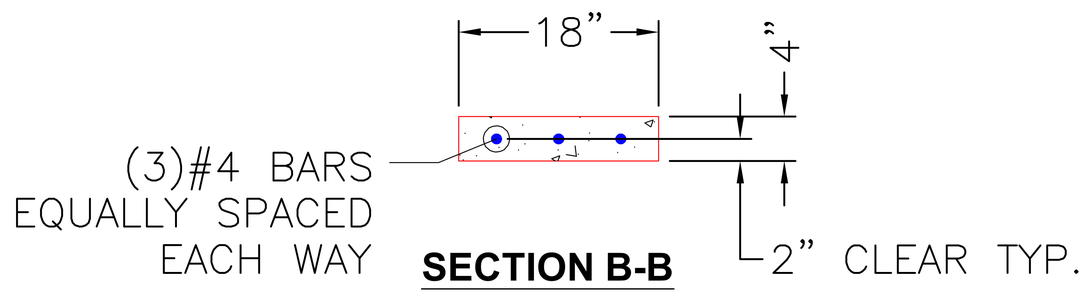

SECTION B-B

PRODUCTION WORK ORDER	PRODUCT I.D.: BLKCSTM	DESCRIPTION: FOOTING SLAB 18" X 18" X 4"	
QUALITY CONTROL CHECKLIST	PRODUCT VIEW: RIGHT SIDE UP	CUSTOMER: GARNEY COMPANIES INC	
☐ ALL DIMENSIONS CORRECT.	PLANT: BEAVER DAM, KY.	PROJECT: EAST BANK REGIONAL ARV'S	
☐ LIFTERS INSTALLED.	WEIGHT: 113 LBS.	STRUCTURE: ARV FOOTER	
☐ HATCH CORRECT LOCATION.	TOP SECTION JOINT: N/A	ORDER NO: 26–2640	
☐ REINFORCING CORRECT.	BASE SECTION JOINT: N/A	PC: T. RYAN	DRAWING: S. FELLETTER
☐ SURFACE QUALITY ACCEPTABLE.	QC CHECK INITIALS:	DATE: 06/25/26	SCALE: NTS / PG. 1 of 1
☐ EDGES CHAMFERED.			
☐ ALL PATCHWORK ACCEPTABLE.			

THIS DRAWING IS THE PROPERTY OF INFRASTRUCTURE PRECAST, INC. ANY USE OR DUPLICATION OF THIS DRAWING WITHOUT PRIOR AUTHORIZATION IS STRICTLY PROHIBITED.

Job Name: 26-1645 East Bank Regional ARV's Job Location: Nashville, TN Contractor: Garney Companies, Inc.	Plant: Beaver Dam 6/26/2026 12:31:51 PM	Tech: S. Felletter PC: J. Jarvis	

Structure ID: 3 - ARV FOOTER 18" x 18" X 4"

P2 BLKCSTM FOOTING SLAB 18"x18"x4" - 4" - 18" x 18"

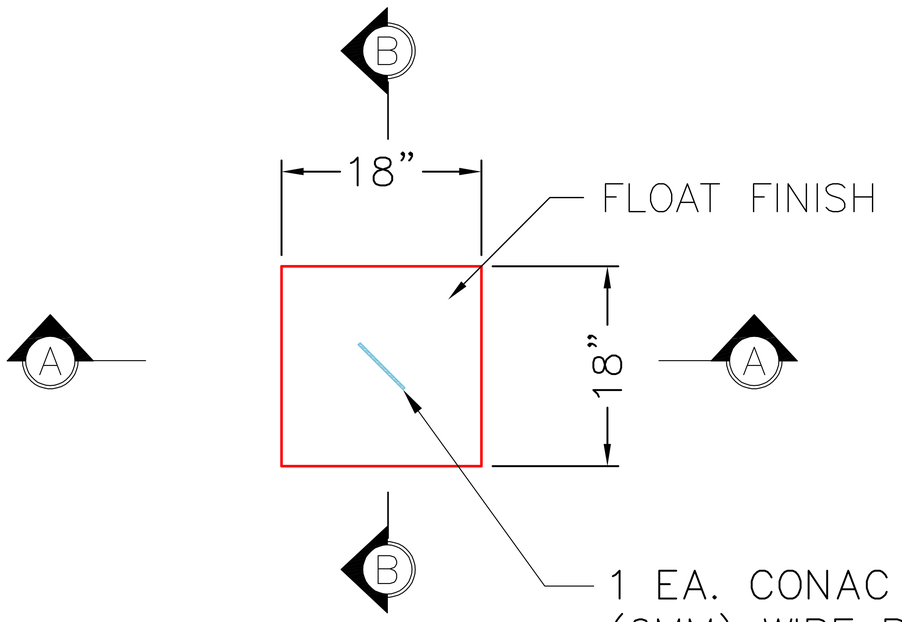

PLAN VIEW

GENERAL NOTES:

1. MANUFACTURED TO ASTM C–913 (LATEST REVISION).
2. CONCRETE: 5,000 PSI AT 28 DAYS.
3. REINFORCING: AS SHOWN BELOW(GRADE 60).
4. WEIGHTS: 113 LBS. EACH

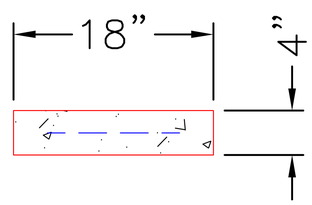

SECTION A-A

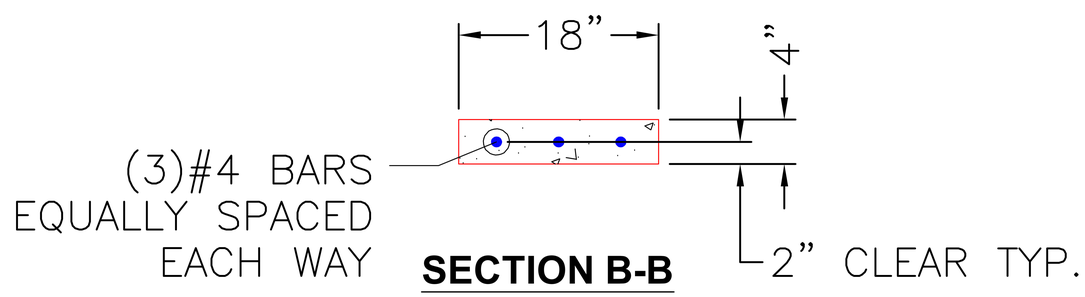

SECTION B-B

PRODUCTION WORK ORDER	PRODUCT I.D.: BLKCSTM	DESCRIPTION: FOOTING SLAB 18" X 18" X 4"	
QUALITY CONTROL CHECKLIST	PRODUCT VIEW: RIGHT SIDE UP	CUSTOMER: GARNEY COMPANIES INC	
☐ ALL DIMENSIONS CORRECT.	PLANT: BEAVER DAM, KY.	PROJECT: EAST BANK REGIONAL ARV'S	
☐ LIFTERS INSTALLED.	WEIGHT: 113 LBS.	STRUCTURE: ARV FOOTER	
☐ HATCH CORRECT LOCATION.	TOP SECTION JOINT: N/A	ORDER NO: 26–2640	
☐ REINFORCING CORRECT.	BASE SECTION JOINT: N/A	PC: T. RYAN	DRAWING: S. FELLETTER
☐ SURFACE QUALITY ACCEPTABLE.	QC CHECK INITIALS:	DATE: 06/25/26	SCALE: NTS / PG. 1 of 1
☐ EDGES CHAMFERED.			
☐ ALL PATCHWORK ACCEPTABLE.			

THIS DRAWING IS THE PROPERTY OF INFRASTRUCTURE PRECAST, INC. ANY USE OR DUPLICATION OF THIS DRAWING WITHOUT PRIOR AUTHORIZATION IS STRICTLY PROHIBITED.

Job Name: 26-1645 East Bank Regional ARV's Job Location: Nashville, TN Contractor: Garney Companies, Inc.	Plant: Beaver Dam 6/26/2026 12:28:03 PM	Tech: S. Felletter PC: J. Jarvis	

Structure ID: 3 - ARV FOOTER 18" x 18" X 4"

P1 BLKCSTM FOOTING SLAB 18"x18"x4" - 4" - 18" x 18"

GENERAL NOTES:

1. MANUFACTURED TO ASTM C-913 (LATEST REVISION).
2. CONCRETE: 5,000 PSI AT 28 DAYS.
3. REINFORCING: AS SHOWN BELOW(GRADE 60).
4. WEIGHTS: 113 LBS. EACH

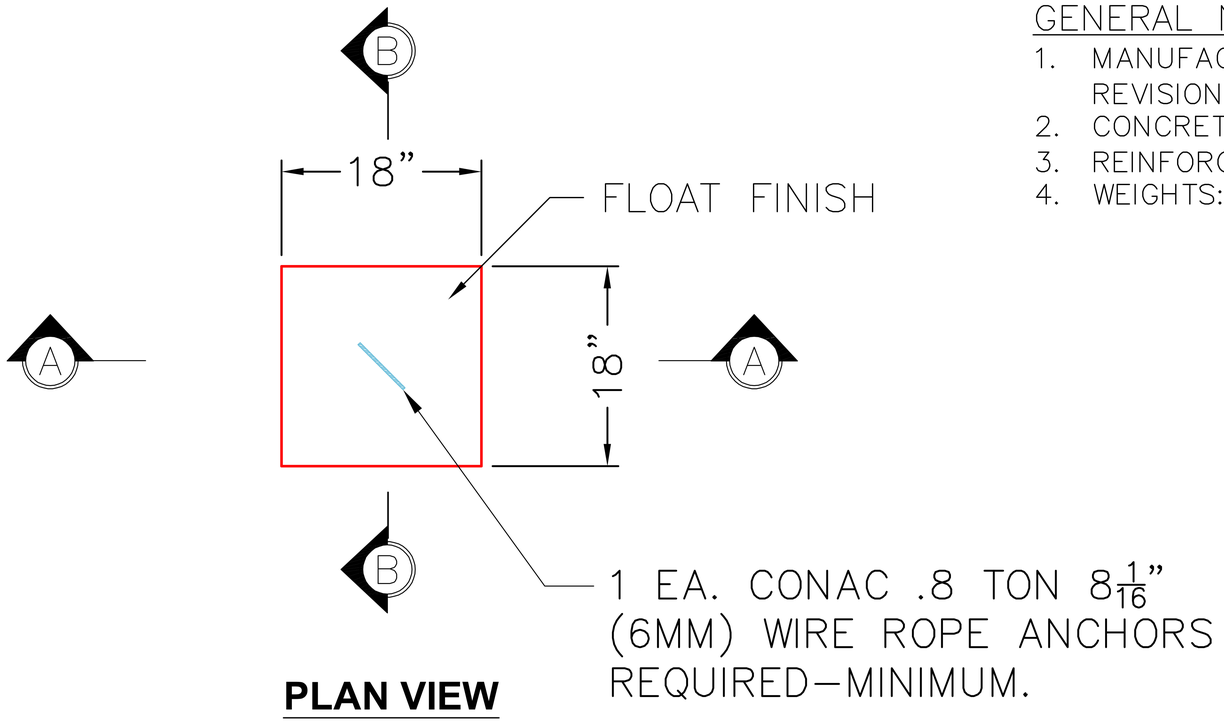

PLAN VIEW

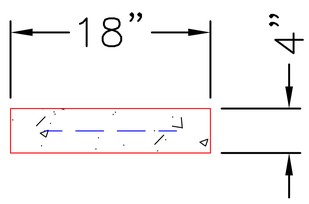

SECTION A-A

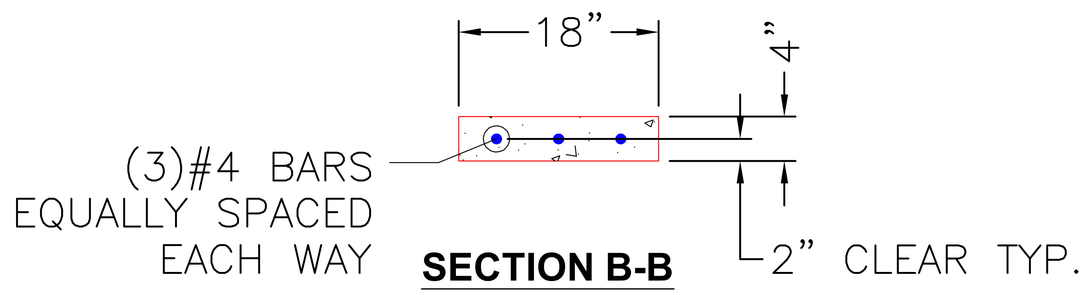

SECTION B-B

PRODUCTION WORK ORDER	PRODUCT I.D.: BLKCSTM	DESCRIPTION: FOOTING SLAB 18" X 18" X 4"	
QUALITY CONTROL CHECKLIST	PRODUCT VIEW: RIGHT SIDE UP	CUSTOMER: GARNEY COMPANIES INC	
☐ ALL DIMENSIONS CORRECT.	PLANT: BEAVER DAM, KY.	PROJECT: EAST BANK REGIONAL ARV'S	
☐ LIFTERS INSTALLED.	WEIGHT: 113 LBS.	STRUCTURE: ARV FOOTER	
☐ HATCH CORRECT LOCATION.	TOP SECTION JOINT: N/A	ORDER NO: 26-2640	
☐ REINFORCING CORRECT.	BASE SECTION JOINT: N/A	PC: T. RYAN	DRAWING: S. FELLETTER
☐ SURFACE QUALITY ACCEPTABLE.	QC CHECK INITIALS:	DATE: 06/25/26	SCALE: NTS / PG. 1 of 1
☐ EDGES CHAMFERED.			
☐ ALL PATCHWORK ACCEPTABLE.			

THIS DRAWING IS THE PROPERTY OF INFRASTRUCTURE PRECAST, INC. ANY USE OR DUPLICATION OF THIS DRAWING WITHOUT PRIOR AUTHORIZATION IS STRICTLY PROHIBITED.

Job Name: 26-2424 Fifth Third Mt. Juliet Central Job Location: Mount Juliet, TN 37122 Contractor: Hayes Pipe Supply	Plant: 100 6/30/2026 11:38:12 AM	Tech: Jared - A PC: Erica Bradley	

Structure ID: ST-1 ST-CI

P1 BX28280606VH BOX BASE 6inW, 6inF, Variable Ht

P2) 28" x 28" - CASTING HEIGHT - 6"	0 lb
P1) 28" x 28" - BOX BASE 6inW, 6inF, Variable Ht - 26"	2367 lb
1) 28" x 28" - Conseal CS-102 1.00"	0 lb
1) Hole - 20	0 lb
1) Hole - 8	0 lb

Structure Total:	2367 lb

Structure Notes: .
1. JBS-3101 PROVIDED BY OTHERS
2. PER ASTM C913 SPECIFICATIONS.
3. CONCRETE = 4,000 PSI AT 28 DAYS.
4. NO INVERT CHANNEL.
5. REINFORCING PER ASTM A615 (GRADE 60).
- WALLS (As .12) #5 BARS AT 12" C.C.E.W.
- FLOOR (As .12) #5 BARS AT 12" C.C.E.W.

Rim: 540.2' Rim to Invert: 2.6' Slack: 0.5" Sump: 1.3" Step Position:

Position	Elev	Angle	Ext. (cw)	Pipe	Pipe OD	Connector	Hole	Horz Size	Up (_)	Offset
Invert 1	537.6'	305°	24.238"	15" HDPE	17.6"	Hole 20	20"	24.415"	0"	-8"
Invert 2	537.6'	0°	20"	6" PVC SCH80	6.625"	Hole 8	8"	8"	0.842"	0"
Invert 3										
Invert 4										
Invert 5										
Invert 6										
Invert 7										
Invert 8										

RIGHT-SIDE UP VIEW (int. dimensions) UPSIDE-DOWN VIEW (int. dimenions)

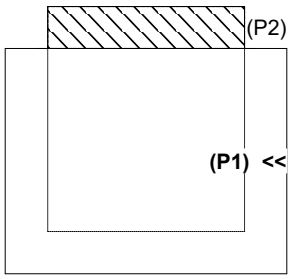

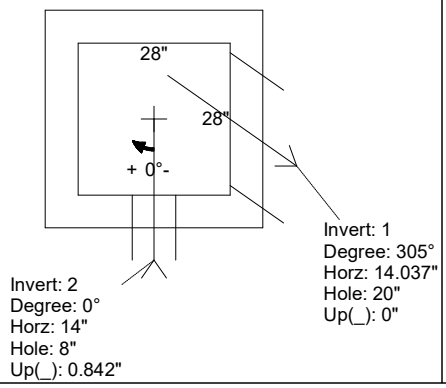

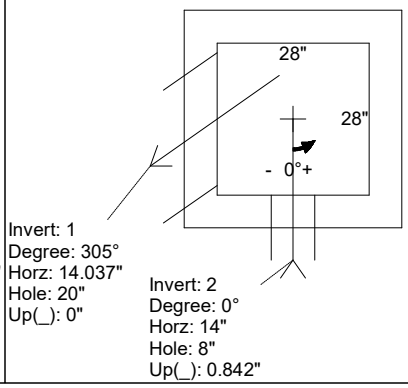

INSIDE WALL DIMENSIONS

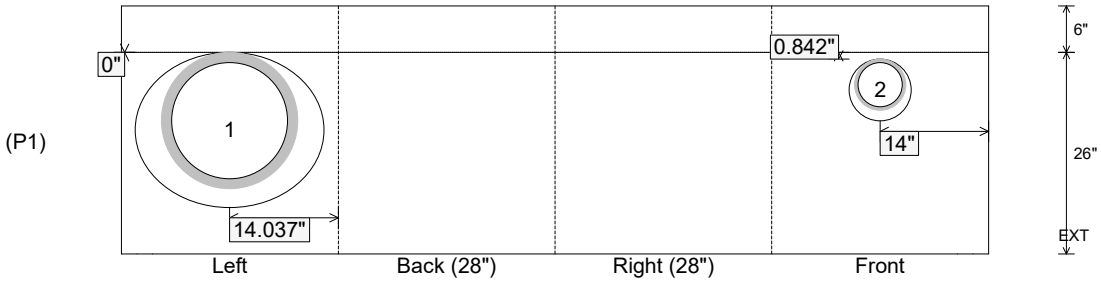

Coating (Int): Coating (Ext):	Seam Up: Flat Seam Dn: n/a	Wall Thickness: 6" Floor Height: 6"	Height (Int): 26" Height (Ext): 32"	Weight (Net): 2367 lb Volume (Net): 0.6cu.yd

Job Name: 25-2952 - KYTC Jefferson Co Call 106 (251315) Job Location: Indiana, KY Contractor: Louisville Paving and Construction	Plant: 100 6/17/2026 5:41:14 PM	Tech: J. Horsley - A PC: J. Jarvis	

Structure ID: 45

P2 BX1818-06R12 BOX RISER 6inW F/G

P3) 18" x 18" - CASTING HEIGHT - 4"	0 lb
P2) 18" x 18" - BOX RISER 6inW F/G - 12"	580 lb
P1) 18" x 18" - BOX BASE 6inW, 6inF, Variable Ht T/n - 20"	1324 lb
2) 18" x 18" - Conseal CS-102 1.00"	0 lb
1) Hole - 18	0 lb
Structure Total:	1904 lb

Structure Notes:
1. PER MSD YARD DRAIN / ASTM C-913 SPECS
2. CONCRETE: 4,000 PSI AT 28 DAYS
3. REINFORCEMENT: #4 BAR @ 12" C.C. E.W. (GRADE 60) - 2" MIN. REBAR CLEARANCE (TYP)
4. HOE 165-A FRAME & GRATE SUPPLIED BY OTHERS

Rim: 551.73' Rim to Invert: 3' Slack: 0" Sump: 0" Step Position:

Position	Elev	Angle	Ext. (cw)	Pipe	Pipe OD	Connector	Hole	Horz Size	Up (_)	Offset
Invert 1										
Invert 2										
Invert 3										
Invert 4										
Invert 5										
Invert 6										
Invert 7										
Invert 8										

RIGHT-SIDE UP VIEW (int. dimensions)

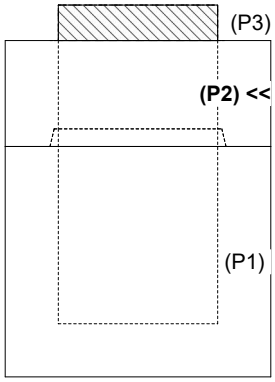

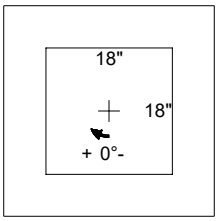

INSIDE WALL DIMENSIONS

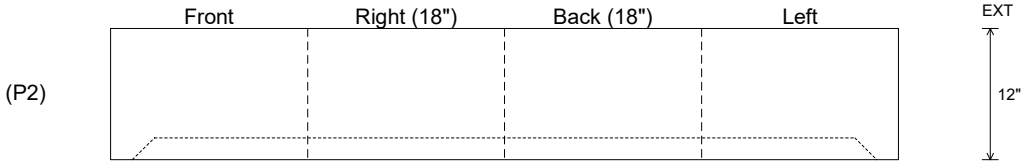

Coating (Int): Coating (Ext):	Seam Up: Flat Seam Dn: Groove	Wall Thickness: 6" Floor Height: 0"	Height (Int): 12" Height (Ext): 12"	Weight (Net): 580 lb Volume (Net): 0.15cu.yd

Job Name: 26-2080 - The Cumberland Job Location: Bowling Green, KY Contractor: J & J Concrete & Excavating, LLC	Plant: 100 6/22/2026 6:23:29 PM	Tech: Jared - A PC: E. Bradley	

Structure ID: C5-1 ST-CI

P1 BX2436-08BVF BOX BASE 8inW, 8inF, Variable Ht F/n

P2) 24" x 36" - CASTING HEIGHT - 6"	0 lb
P1) 24" x 36" - BOX BASE 8inW, 8inF, Variable Ht F/n - 50"	6363 lb
1) CASTING - HOE 525 SET (F/G/H)	442 lb
1) 24" x 36" - Conseal CS-102 1.00"	0 lb
1) Hole - 16	0 lb
Structure Total:	6805 lb

Structure Notes:
1. PER ASTM C-913 SPECIFICATIONS
2. CONCRETE: 4,000 PSI AT 28 DAYS
3. REINFORCEMENT: #5 BAR @ 12" C.C. E.W. (GRADE 60) - 2" MIN. REBAR CLEARANCE (TYP)
4. HOE 525 FRAME, FLAT GRATE, & CURB HOOD SUPPLIED BY ICAST

Rim: 532.75' Rim to Invert: 4.88' Slack: 2.56" Sump: 0" Step Position: 90°

Position	Elev	Angle	Ext. (cw)	Pipe	Pipe OD	Connector	Hole	Horz Size	Up (_)	Offset
Invert 1	527.87'	270°	26"	12" HDPE	14.5"	Hole 16	16"	16"	-1.25"	0"
Invert 2										
Invert 3										
Invert 4										
Invert 5										
Invert 6										
Invert 7										
Invert 8										

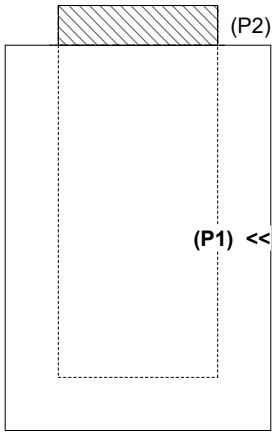

RIGHT-SIDE UP VIEW (int. dimensions)

UPSIDE-DOWN VIEW (int. dimenions)

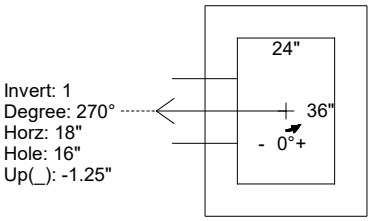

INSIDE WALL DIMENSIONS

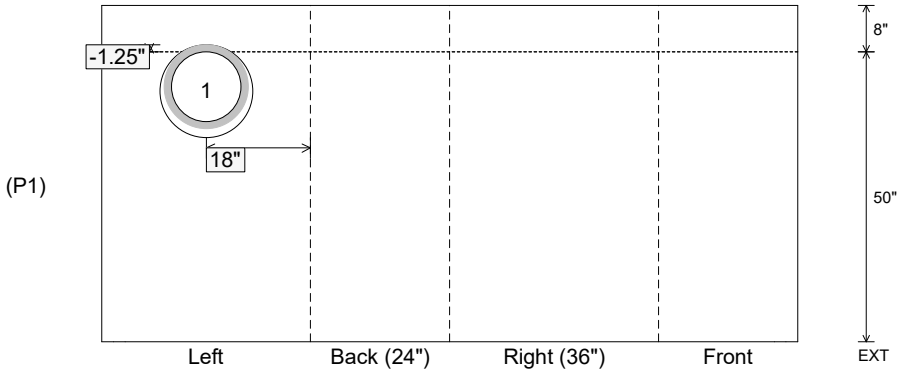

Coating (Int): Coating (Ext):	Seam Up: Flat Seam Dn: n/a	Wall Thickness: 8" Floor Height: 8"	Height (Int): 50" Height (Ext): 58"	Weight (Net): 6363 lb Volume (Net): 1.62cu.yd

Job Name: 25-3193 - KYTC Kenton Co Call 328 (251320) Job Location: Independence, KY Contractor: Eaton Asphalt	Plant: 100 6/4/2026 4:51:43 PM	Tech: Jared - A PC: J. Jarvis	

Structure ID: 504

P1 BX2436-08BVF BOX BASE 8inW, 8inF, Variable Ht T/n

P3) 24" x 120" - CB INLET KY A 10' TOP LEFT F/G - 10"	3400 lb
P2) 24" x 120" - CB INLET KY A 10' BOTTOM LEFT T/G - 18"	5270 lb
P1) 24" x 36" - BOX BASE 8inW, 8inF, Variable Ht T/n - 29"	3967 lb
1) CASTING - HOE KY-206 F/C (KY TY1)	206 lb
1) This Structure Includes a Cast-in Item - KY-206 Frame (Supplied by iCast)	0 lb
1) 24" x 36" - Conseal CS-102 1.00"	0 lb
2) Hole - 24	0 lb
2) Hole - 8	0 lb
Structure Total:	12843 lb

Structure Notes:

** KYTC STATE PROJECT **

1. PER KYTC CBI TY A / ASTM C-913 SPECS
2. CONCRETE: 4,000 PSI AT 28 DAYS
3. REINFORCEMENT: #5 BAR @ 12" C.C. E.W. (GRADE 60) - 2" MIN. REBAR CLEARANCE (TYP)
4. NO STORM INVERT
5. NO STEPS
6. KY-206 FRAME & COVER "STORM" SUPPLIED BY ICAST - FRAME TO BE CAST INTO TOP PHASE TOP FLANGE SIDE UP
7. INVERTS 3 & 4 OFFSET 14" FROM CENTER OF WALL

Rim: 884' Rim to Invert: 4.77' Slack: 0.24" Sump: 0" Step Position:

Position	Elev	Angle	Ext. (cw)	Pipe	Pipe OD	Connector	Hole	Horz Size	Up (_)	Offset
Invert 1	879.23'	0°	20"	18" ADS N-12	22"	Hole 24	24"	24"	-3"	0"
Invert 2	879.23'	180°	20"	18" ADS N-12	22"	Hole 24	24"	24"	-3"	0"
Invert 3	880.81'	90°	12"	4" HDPE (perf pipe)	4.8"	Hole 8	8"	8"	17"	-14"
Invert 4	880.81'	270°	12"	4" HDPE (perf pipe)	4.8"	Hole 8	8"	8"	17"	-14"
Invert 5										
Invert 6										
Invert 7										
Invert 8										

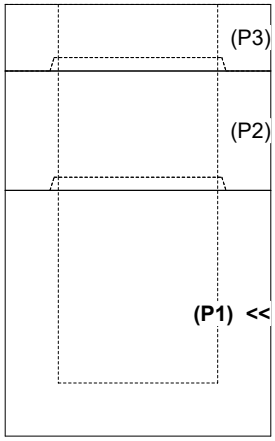

RIGHT-SIDE UP VIEW (int. dimensions)

UPSIDE-DOWN VIEW (int. dimenions)

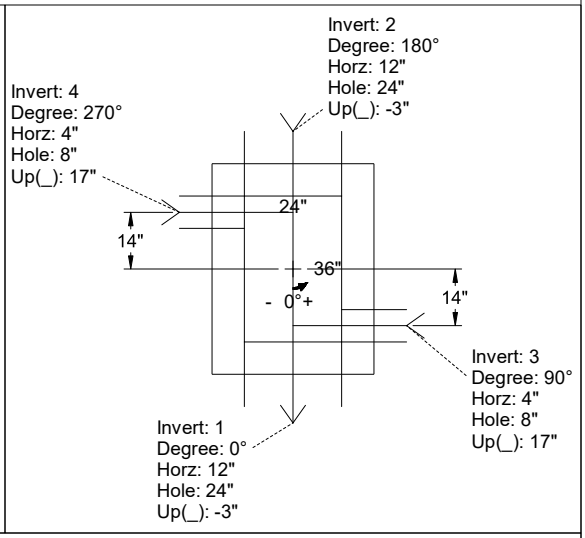

INSIDE WALL DIMENSIONS

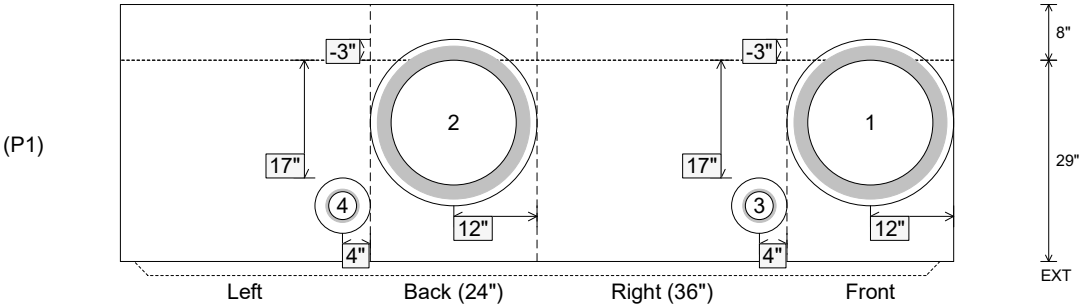

Coating (Int): Coating (Ext):	Seam Up: Tongue Seam Dn: n/a	Wall Thickness: 8" Floor Height: 8"	Height (Int): 29" Height (Ext): 37"	Weight (Net): 3967 lb Volume (Net): 1.01cu.yd

Job Name: 25-3193 - KYTC Kenton Co Call 328 (251320) Job Location: Independence, KY Contractor: Eaton Asphalt	Plant: 100 6/4/2026 4:51:40 PM	Tech: Jared - A PC: J. Jarvis	

Structure ID: 506

P1 BX2436-08BVF BOX BASE 8inW, 8inF, Variable Ht T/n

P3) 24" x 120" - CB INLET KY A 10' TOP LEFT F/G - 10"	3400 lb
P2) 24" x 120" - CB INLET KY A 10' BOTTOM LEFT T/G - 18"	5270 lb
P1) 24" x 36" - BOX BASE 8inW, 8inF, Variable Ht T/n - 33"	3928 lb
1) CASTING - HOE KY-206 F/C (KY TY1)	206 lb
1) This Structure Includes a Cast-in Item - KY-206 Frame (Supplied by iCast)	0 lb
1) 24" x 36" - Conseal CS-102 1.00"	0 lb
3) Hole - 24	0 lb
2) Hole - 8	0 lb
Structure Total:	12804 lb

Structure Notes:

** KYTC STATE PROJECT **

1. PER KYTC CBI TY A / ASTM C-913 SPECS
2. CONCRETE: 4,000 PSI AT 28 DAYS
3. REINFORCEMENT: #5 BAR @ 12" C.C. E.W. (GRADE 60) - 2" MIN. REBAR CLEARANCE (TYP)
4. NO STORM INVERT
5. NO STEPS
6. KY-206 FRAME & COVER "STORM" SUPPLIED BY ICAST - FRAME TO BE CAST INTO TOP PHASE TOP FLANGE SIDE UP
7. INVERT 5 OFFSET 14" FROM CENTER OF WALL

Rim: 868.22' Rim to Invert: 5.09' Slack: 0.08" Sump: 0" Step Position:

Position	Elev	Angle	Ext. (cw)	Pipe	Pipe OD	Connector	Hole	Horz Size	Up (_)	Offset
Invert 1	863.13'	90°	26"	18" ADS N-12	22"	Hole 24	24"	24"	-3"	0"
Invert 2	863.13'	180°	20"	18" ADS N-12	22"	Hole 24	24"	24"	-3"	0"
Invert 3	863.13'	270°	26"	18" ADS N-12	22"	Hole 24	24"	24"	-3"	0"
Invert 4	865.05'	0°	20"	4" HDPE (perf pipe)	4.8"	Hole 8	8"	8"	21"	0"
Invert 5	865.05'	270°	12"	4" HDPE (perf pipe)	4.8"	Hole 8	8"	8"	21"	-14"
Invert 6										
Invert 7										
Invert 8										

RIGHT-SIDE UP VIEW (int. dimensions)

UPSIDE-DOWN VIEW (int. dimenions)

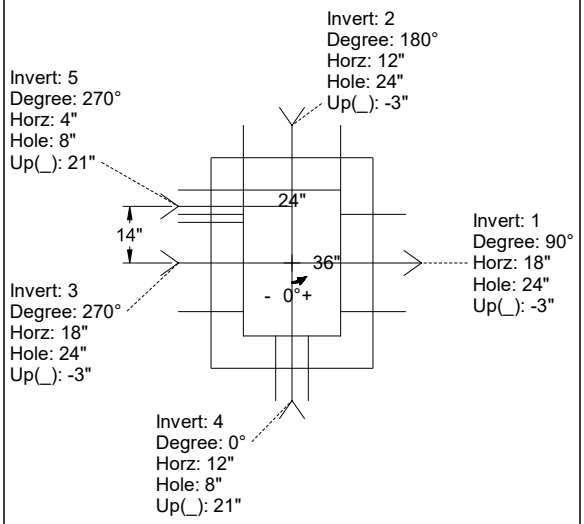

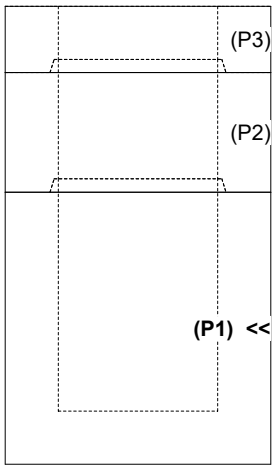

INSIDE WALL DIMENSIONS

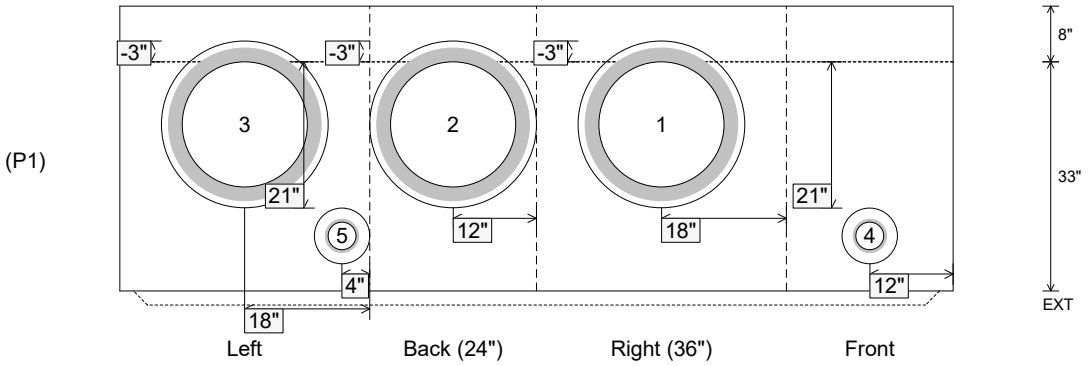

Coating (Int): Coating (Ext):	Seam Up: Tongue Seam Dn: n/a	Wall Thickness: 8" Floor Height: 8"	Height (Int): 33" Height (Ext): 41"	Weight (Net): 3928 lb Volume (Net): 1cu.yd

Job Name: 25-3193 - KYTC Kenton Co Call 328 (251320) Job Location: Independence, KY Contractor: Eaton Asphalt	Plant: 100 6/4/2026 4:51:38 PM	Tech: Jared - A PC: J. Jarvis	

Structure ID: 505

P1 BX2436-08BVF BOX BASE 8inW, 8inF, Variable Ht T/n

P3) 24" x 120" - CB INLET KY A 10' TOP LEFT F/G - 10"	3400 lb
P2) 24" x 120" - CB INLET KY A 10' BOTTOM LEFT T/G - 18"	5270 lb
P1) 24" x 36" - BOX BASE 8inW, 8inF, Variable Ht T/n - 29"	3967 lb
1) CASTING - HOE KY-206 F/C (KY TY1)	206 lb
1) This Structure Includes a Cast-in Item - KY-206 Frame (Supplied by iCast)	0 lb
1) 24" x 36" - Conseal CS-102 1.00"	0 lb
2) Hole - 24	0 lb
2) Hole - 8	0 lb
Structure Total:	12843 lb

Structure Notes:

** KYTC STATE PROJECT **

1. PER KYTC CBI TY A / ASTM C-913 SPECS
2. CONCRETE: 4,000 PSI AT 28 DAYS
3. REINFORCEMENT: #5 BAR @ 12" C.C. E.W. (GRADE 60) - 2" MIN. REBAR CLEARANCE (TYP)
4. NO STORM INVERT
5. NO STEPS
6. KY-206 FRAME & COVER "STORM" SUPPLIED BY ICAST - FRAME TO BE CAST INTO TOP PHASE TOP FLANGE SIDE UP
7. INVERTS 3 & 4 OFFSET 14" FROM CENTER OF WALL

Rim: 871.83' Rim to Invert: 4.77' Slack: 0.24" Sump: 0" Step Position:

Position	Elev	Angle	Ext. (cw)	Pipe	Pipe OD	Connector	Hole	Horz Size	Up (_)	Offset
Invert 1	867.06'	0°	20"	18" ADS N-12	22"	Hole 24	24"	24"	-3"	0"
Invert 2	867.06'	180°	20"	18" ADS N-12	22"	Hole 24	24"	24"	-3"	0"
Invert 3	868.64'	90°	12"	4" HDPE (perf pipe)	4.8"	Hole 8	8"	8"	17"	-14"
Invert 4	868.64'	270°	12"	4" HDPE (perf pipe)	4.8"	Hole 8	8"	8"	17"	-14"
Invert 5										
Invert 6										
Invert 7										
Invert 8										

RIGHT-SIDE UP VIEW (int. dimensions)

UPSIDE-DOWN VIEW (int. dimenions)

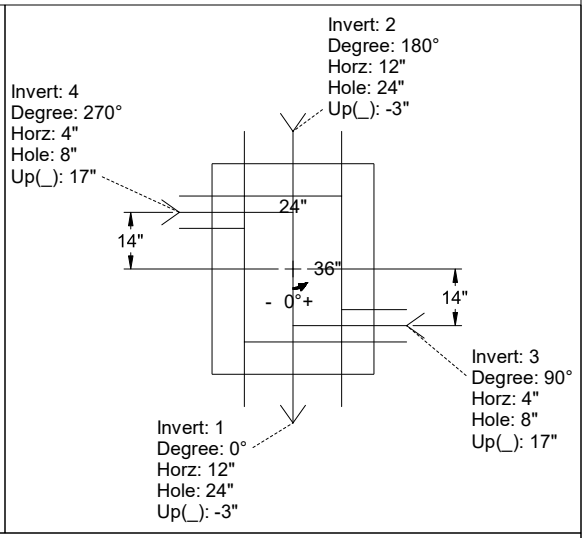

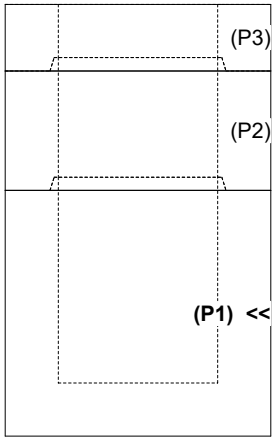

INSIDE WALL DIMENSIONS

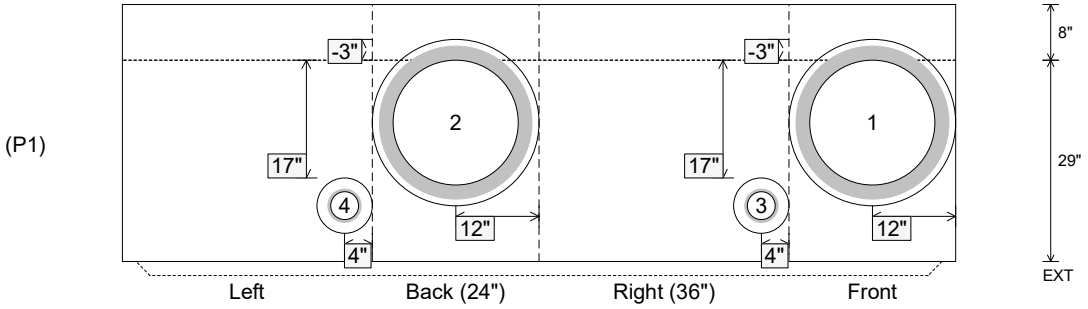

Coating (Int): Coating (Ext):	Seam Up: Tongue Seam Dn: n/a	Wall Thickness: 8" Floor Height: 8"	Height (Int): 29" Height (Ext): 37"	Weight (Net): 3967 lb Volume (Net): 1.01cu.yd

Job Name: 25-3062 Portland Bypass Job Location: Portland, TN Contractor: Scotty's Contracting & Stone, LLC	Plant: Beaver Dam 6/1/2026 8:22:52 AM	Tech: J. Coppage PC: C. Goff	

Structure ID: CB-18

P1 BX4848-08BAVF BOX BASE 8inW, 8inF, Variable Ht

P3) 28" x 34" - CASTING HEIGHT - 7"	0 lb
P2) 48" x 48" - BX FLAT LID 8"W - TDOT 12SB (28"x34" Hole) - 10"	2638 lb
P1) 48" x 48" - BOX BASE 8inW, 8inF, Variable Ht - 39"	7743 lb
1) CASTING - JBS-3123 MODIFIED SET	250 lb
1) 48" x 48" - Conseal CS-102 1.00"	0 lb
1) 28" x 34" - Conseal CS-102 1.00"	0 lb
1) Hole - 40 x 28	0 lb
1) Hole - 32	0 lb
1) Hole - 6	0 lb
Structure Total:	10631 lb

Structure Notes:
1. PER TDOT D-CB-12SB / ASTM C913 SPEC'S.
2. CONCRETE = 4,000 PSI AT 28 DAYS.
3. NO INVERT CHANNEL.
4. JBS 3123 MOD SINGLE SET BY ICAST
5. REINFORCING PER ASTM A615 (GRADE 60).
** SEE TDOT STD DRAWING D-CB-12SB **
- TOP SLAB - DBL MAT #5 BARS.
- WALLS (As .47) #5 BARS AT 8" C.C.E.W.
- FLOOR (As .47) #5 BARS AT 8" C.C.E.W.

Rim: 785.88' Rim to Invert: 4.44' Slack: 0.905" Sump: 3.625" Step Position:

Position	Elev	Angle	Ext. (cw)	Pipe	Pipe OD	Connector	Hole	Horz Size	Up (_)	Offset
Invert 1	781.44'	0°	28"	30" x 19" ELL RCP	37.375" x 26.438"	Hole 40 x 28	40" x 28"	40"	0"	-4"
Invert 2	781.61'	180°	36"	24" RCP B WALL	30"	Hole 32	32"	32"	2.665"	4"
Invert 3	782.88'	180°	11"	4" HDPE (perf pipe)	4.8"	Hole 6	6"	6"	20.505"	-21"
Invert 4										
Invert 5										
Invert 6										
Invert 7										
Invert 8										

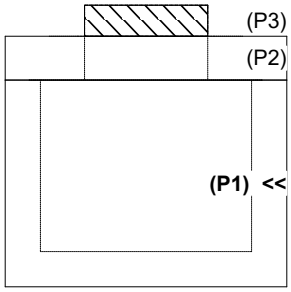

RIGHT-SIDE UP VIEW (int. dimensions)

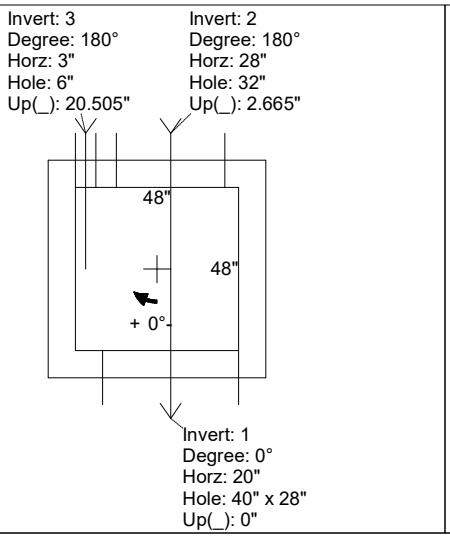

UPSIDE-DOWN VIEW (int. dimenions)

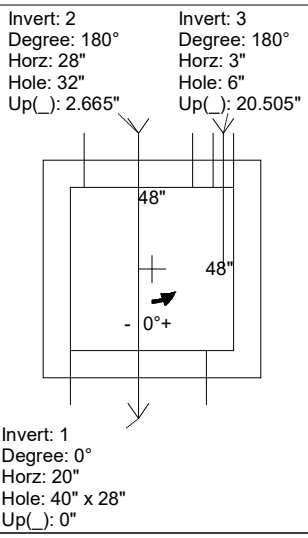

INSIDE WALL DIMENSIONS

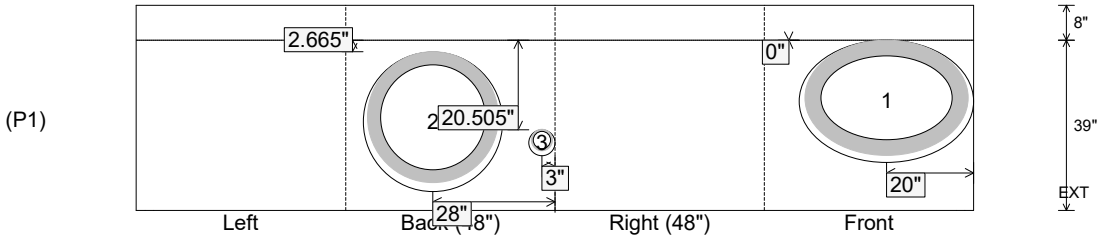

Coating (Int): Coating (Ext):	Seam Up: Flat Seam Dn: n/a	Wall Thickness: 8" Floor Height: 8"	Height (Int): 39" Height (Ext): 47"	Weight (Net): 7743 lb Volume (Net): 1.98cu.yd

Job Name: 25-2952 - KYTC Jefferson Co Call 106 (251315) Job Location: Indiana, KY Contractor: Louisville Paving and Construction	Plant: 100 6/12/2026 3:09:32 PM	Tech: J. Horsley - A PC: J. Jarvis	

Structure ID: 26

P1 BX2424-08BAVF BOX BASE 8inW, 8inF, Variable Ht F/n

P3) 19.5" - CASTING (cast in) - 2.75"	0 lb
P2) 24" x 24" - CB FLAT TOP 8"W (HOE KY-210) F/F - 8"	943 lb
P1) 24" x 24" - BOX BASE 8inW, 8inF, Variable Ht F/n - 31"	3316 lb
1) This Structure Includes a Cast-in Item - HOE KY-210 Frame (Supplied By Others)	0 lb
1) 24" x 24" - Conseal CS-102 1.00"	0 lb
2) Hole - 20	0 lb
Structure Total:	4259 lb

Structure Notes:

** KYTC STATE PROJECT **

1. PER KYTC DBI TYPE 14 / ASTM C-913 SPECS
2. CONCRETE: 4,000 PSI AT 28 DAYS
3. REINFORCEMENT: #5 BAR @ 12" C.C. E.W. (GRADE 60) - 2" MIN. REBAR CLEARANCE (TYP)
4. HOE KY-210 FRAME & GRATE SUPPLIED BY OTHERS - FRAME TO BE CAST INTO FLAT LID

Rim: 558.6' Rim to Invert: 3.25' Slack: 0" Sump: 0" Step Position:

Position	Elev	Angle	Ext. (cw)	Pipe	Pipe OD	Connector	Hole	Horz Size	Up (_)	Offset
Invert 1	555.35'	90°	20"	15" HDPE	17.6"	Hole 20	20"	20"	-2.5"	0"
Invert 2	555.35'	270°	20"	15" HDPE	17.6"	Hole 20	20"	20"	-2.5"	0"
Invert 3										
Invert 4										
Invert 5										
Invert 6										
Invert 7										
Invert 8										

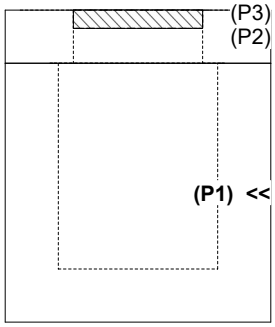

RIGHT-SIDE UP VIEW (int. dimensions)

UPSIDE-DOWN VIEW (int. dimenions)

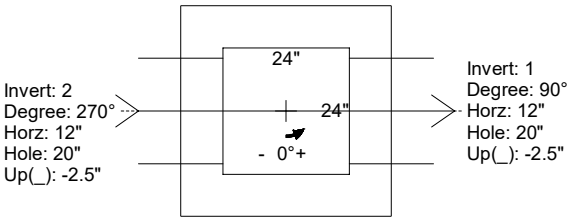

INSIDE WALL DIMENSIONS

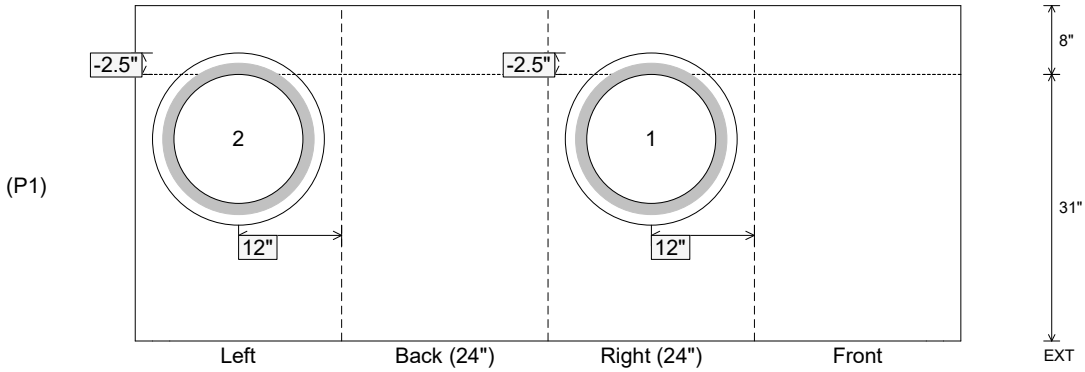

Coating (Int): Coating (Ext):	Seam Up: Flat Seam Dn: n/a	Wall Thickness: 8" Floor Height: 8"	Height (Int): 31" Height (Ext): 39"	Weight (Net): 3316 lb Volume (Net): 0.85cu.yd

Job Name: 25-2952 - KYTC Jefferson Co Call 106 (251315) Job Location: Indiana, KY Contractor: Louisville Paving and Construction	Plant: 100 6/12/2026 3:09:30 PM	Tech: J. Horsley - A PC: J. Jarvis	

Structure ID: 27

P1 BX2424-08BAVF BOX BASE 8inW, 8inF, Variable Ht F/n

P3) 19.5" - CASTING (cast in) - 2.75"	0 lb
P2) 24" x 24" - CB FLAT TOP 8"W (HOE KY-210) F/F - 8"	943 lb
P1) 24" x 24" - BOX BASE 8inW, 8inF, Variable Ht F/n - 31"	3316 lb
1) This Structure Includes a Cast-in Item - HOE KY-210 Frame (Supplied By Others)	0 lb
1) 24" x 24" - Conseal CS-102 1.00"	0 lb
2) Hole - 20	0 lb
Structure Total:	4259 lb

Structure Notes:

** KYTC STATE PROJECT **

1. PER KYTC DBI TYPE 14 / ASTM C-913 SPECS
2. CONCRETE: 4,000 PSI AT 28 DAYS
3. REINFORCEMENT: #5 BAR @ 12" C.C. E.W. (GRADE 60) - 2" MIN. REBAR CLEARANCE (TYP)
4. HOE KY-210 FRAME & GRATE SUPPLIED BY OTHERS - FRAME TO BE CAST INTO FLAT LID

Rim: 557.2' Rim to Invert: 3.25' Slack: 0" Sump: 0" Step Position:

Position	Elev	Angle	Ext. (cw)	Pipe	Pipe OD	Connector	Hole	Horz Size	Up (_)	Offset
Invert 1	553.95'	90°	20"	15" HDPE	17.6"	Hole 20	20"	20"	-2.5"	0"
Invert 2	553.95'	270°	20"	15" HDPE	17.6"	Hole 20	20"	20"	-2.5"	0"
Invert 3										
Invert 4										
Invert 5										
Invert 6										
Invert 7										
Invert 8										

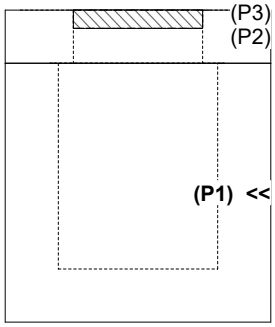

RIGHT-SIDE UP VIEW (int. dimensions)

UPSIDE-DOWN VIEW (int. dimenions)

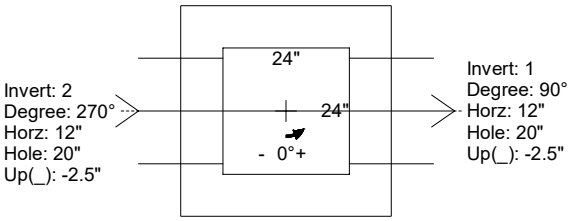

INSIDE WALL DIMENSIONS

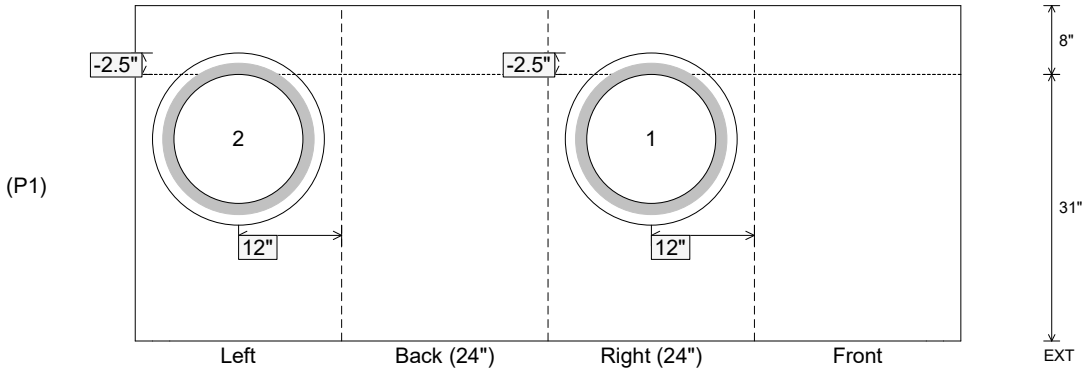

Coating (Int): Coating (Ext):	Seam Up: Flat Seam Dn: n/a	Wall Thickness: 8" Floor Height: 8"	Height (Int): 31" Height (Ext): 39"	Weight (Net): 3316 lb Volume (Net): 0.85cu.yd

Job Name: 25-2952 - KYTC Jefferson Co Call 106 (251315) Job Location: Indiana, KY Contractor: Louisville Paving and Construction	Plant: 100 6/17/2026 5:40:44 PM	Tech: J. Horsley - A PC: J. Jarvis	

Structure ID: 8

P1 BX3636-08BAVF BOX BASE 8inW, 8inF, Variable Ht F/n

P2) 36" x 36" - CASTING HEIGHT - 3"	0 lb
P1) 36" x 36" - BOX BASE 8inW, 8inF, Variable Ht F/n - 27"	4398 lb
1) 36" x 36" - Conseal CS-102 1.00"	0 lb
2) Hole - 24	0 lb
Structure Total:	4398 lb

Structure Notes:

1. PER MSD CATCH BASIN TYPE 1 / ASTM C-913 SPECS
2. CONCRETE: 4,000 PSI AT 28 DAYS
3. REINFORCEMENT: #5 BAR @ 12" C.C. E.W. (GRADE 60) - 2" MIN. REBAR CLEARANCE (TYP)
4. HOE 595 FRAME & GRATES SUPPLIED BY OTHERS

Rim: 564.49' Rim to Invert: 2.5' Slack: 0" Sump: 0" Step Position:

Position	Elev	Angle	Ext. (cw)	Pipe	Pipe OD	Connector	Hole	Horz Size	Up (_)	Offset
Invert 1	561.99'	90°	26"	18" HDPE	21.2"	Hole 24	24"	24"	-3"	0"
Invert 2	561.99'	270°	26"	18" HDPE	21.2"	Hole 24	24"	24"	-3"	0"
Invert 3										
Invert 4										
Invert 5										
Invert 6										
Invert 7										
Invert 8										

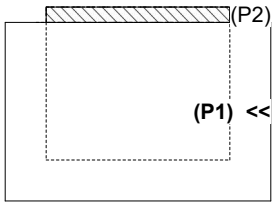

RIGHT-SIDE UP VIEW (int. dimensions)

UPSIDE-DOWN VIEW (int. dimenions)

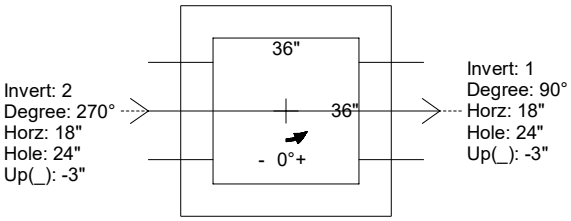

INSIDE WALL DIMENSIONS

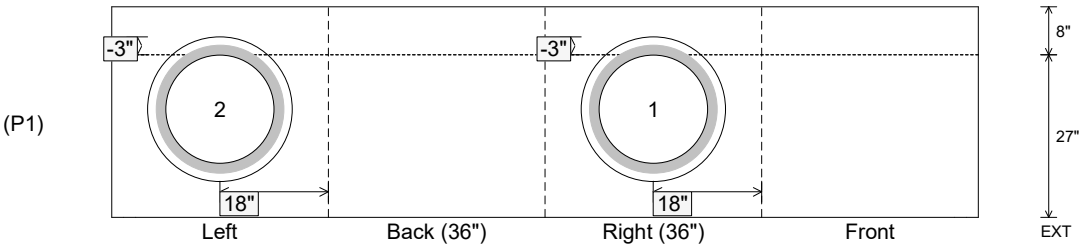

Coating (Int): Coating (Ext):	Seam Up: Flat Seam Dn: n/a	Wall Thickness: 8" Floor Height: 8"	Height (Int): 27" Height (Ext): 35"	Weight (Net): 4398 lb Volume (Net): 1.12cu.yd

Job Name: 26-2080 - The Cumberland Job Location: Bowling Green, KY Contractor: J & J Concrete & Excavating, LLC	Plant: 100 6/22/2026 6:26:03 PM	Tech: Jared - A PC: E. Bradley	

Structure ID: D3 ST-CI

P3 GR24x36x8x3 GRADE RING F/F

P4) 24" x 36" - CASTING HEIGHT - 6"	0 lb
P3) 24" x 36" - GRADE RING F/F - 3"	306 lb
P2) 48" - MH FLAT TOP w/24"x36" Hole F/G - 12"	1300 lb
P1) 48" - MH BASE T/n - 42"	4129 lb
1) CASTING - HOE 525 SET (F/G/H)	442 lb
1) 48" - Conseal CS-102 1.00"	0 lb
2) 24" x 36" - Conseal CS-102 1.00"	0 lb
1) Hole - 20	0 lb
4) MH Step ML-10-TDS-NCR - 10"	0 lb
Structure Total:	6177 lb

Structure Notes:
1. PER ASTM C-913 SPECIFICATIONS
2. CONCRETE: 4,000 PSI AT 28 DAYS
3. REINFORCEMENT: #4 BAR AS SHOWN (GRADE 60)
4. LIFTERS: 2 EA. WRA016 CONAC WIRE ROPE ANCHORS FOR PLANT & FIELD HANDLING

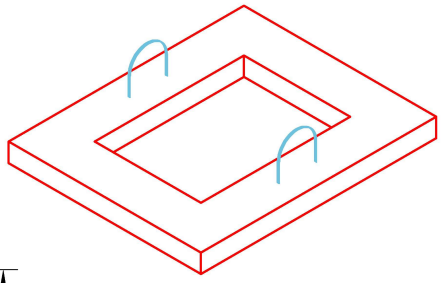

ISOMETRIC VIEW

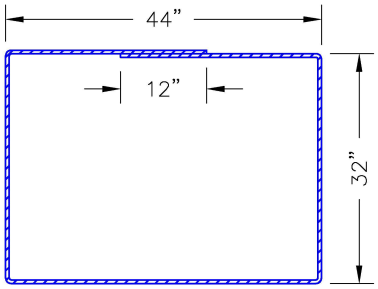

#4 BAR REINFORCING

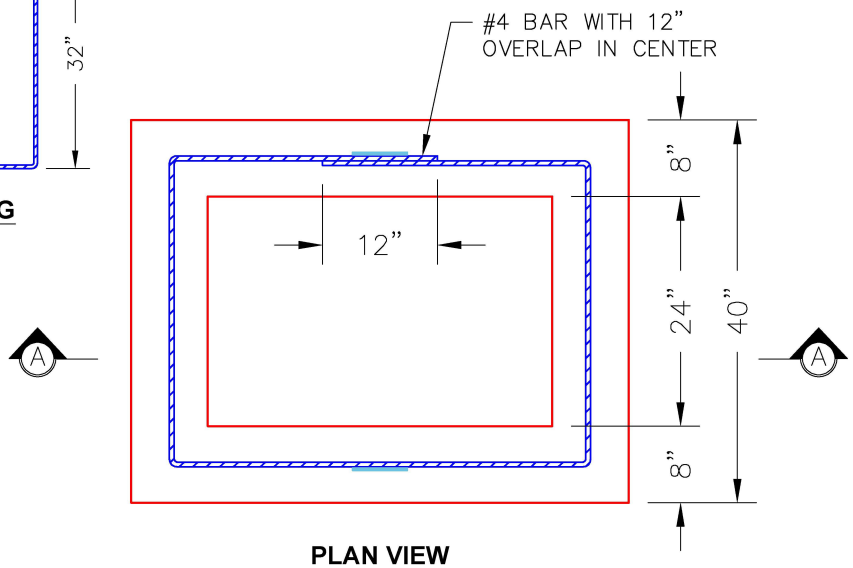

PLAN VIEW

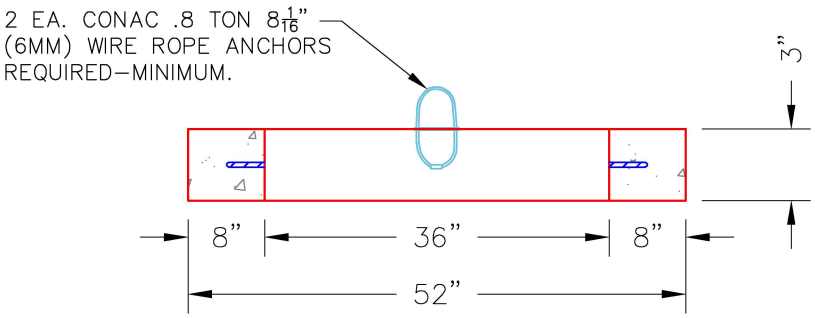

SECTION A-A

Coating (Int): Coating (Ext):	Seam Up: Flat Seam Dn: Flat	Wall Thickness: 8"	Height (Ext): 3"	Weight (Net): 306 lb Volume (Net): 0.08cu.yd

Job Name: 26-2080 - The Cumberland Job Location: Bowling Green, KY Contractor: J & J Concrete & Excavating, LLC	Plant: 100 6/22/2026 6:26:00 PM	Tech: Jared - A PC: E. Bradley	

Structure ID: B2 ST-CI

P3 GR24x36x8x3 GRADE RING F/F

P4) 24" x 36" - CASTING HEIGHT - 6"	0 lb
P3) 24" x 36" - GRADE RING F/F - 3"	306 lb
P2) 48" - MH FLAT TOP w/24"x36" Hole F/G - 12"	1300 lb
P1) 48" - MH BASE T/n - 36"	3575 lb
1) CASTING - HOE 525 SET (F/G/H)	442 lb
1) 48" - Conseal CS-102 1.00"	0 lb
2) 24" x 36" - Conseal CS-102 1.00"	0 lb
2) Hole - 20	0 lb
3) MH Step ML-10-TDS-NCR - 10"	0 lb
Structure Total:	5623 lb

Structure Notes:
1. PER ASTM C-913 SPECIFICATIONS
2. CONCRETE: 4,000 PSI AT 28 DAYS
3. REINFORCEMENT: #4 BAR AS SHOWN (GRADE 60)
4. LIFTERS: 2 EA. WRA016 CONAC WIRE ROPE ANCHORS FOR PLANT & FIELD HANDLING

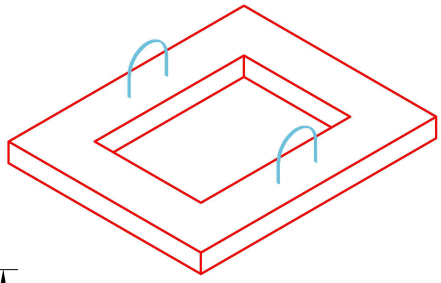

ISOMETRIC VIEW

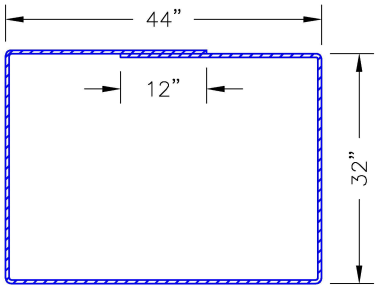

#4 BAR REINFORCING

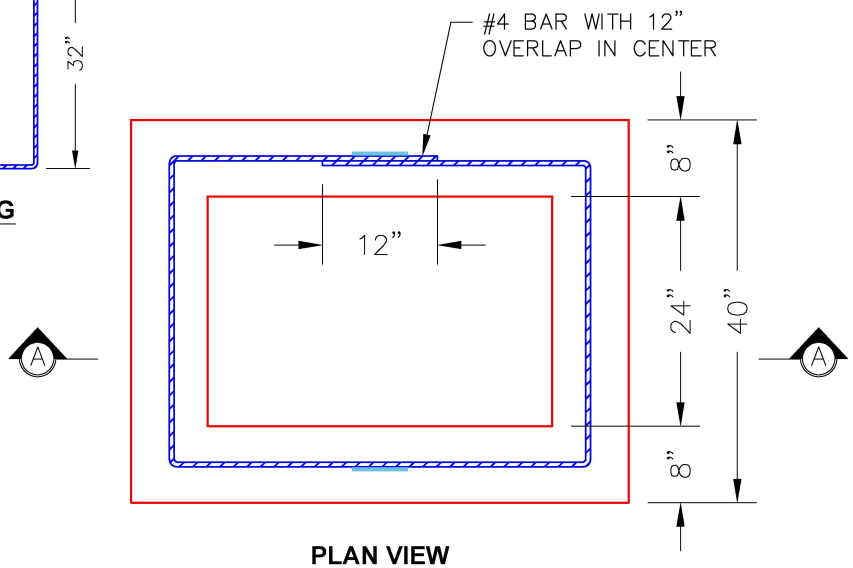

PLAN VIEW

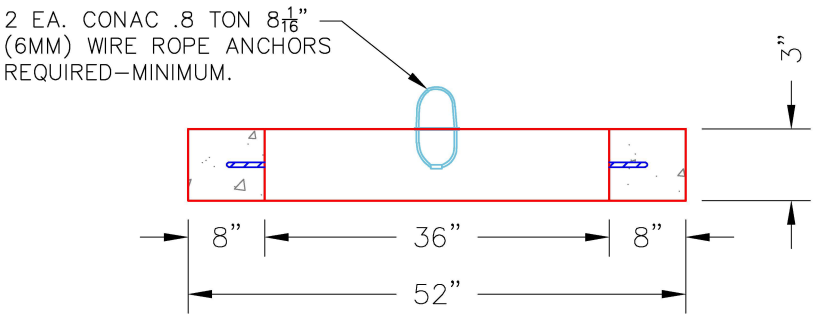

SECTION A-A

Coating (Int): Coating (Ext):	Seam Up: Flat Seam Dn: Flat	Wall Thickness: 8"	Height (Ext): 3"	Weight (Net): 306 lb Volume (Net): 0.08cu.yd

26-2801 900640
QwikTrip No. 1

15-CS-4
ICAST to fully pre-assemble internal materials prior to shipment

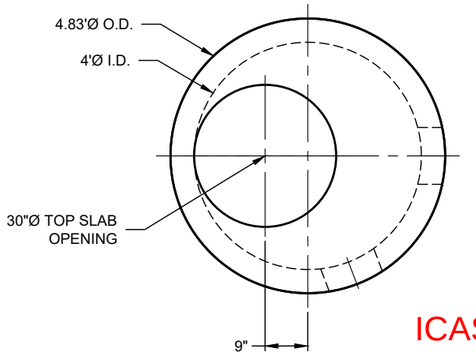

PLAN VIEW
INTERNALS NOT SHOWN

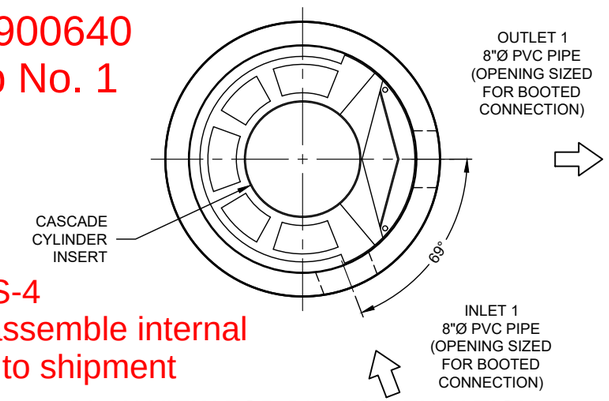

PLAN VIEW FOR PIPE ORIENTATION
TOP SLAB NOT SHOWN

MATERIAL LIST

COUNT	DESCRIPTION	PART NUMBER	PROVIDED BY	INSTALLED BY
1	CS-4 CYLINDER INSERT, STD.	325-003949	CONTECH	PRECASTER
4	CS-4 ALUMINUM INSTALLATION BRACKETS	325-003956	CONTECH	PRECASTER
1	CS-4 HARDWARE KIT	325-003955	CONTECH	PRECASTER
2	BOOT FOR 8"Ø PVC PIPE		PRECASTER	PRECASTER
1	SEALANT FOR JOINTS		PRECASTER	CONTRACTOR
1	30"Ø X 4" FRAME AND COVER, EJ #41600483, OR EQUIV.	325-000332	CONTECH	CONTRACTOR

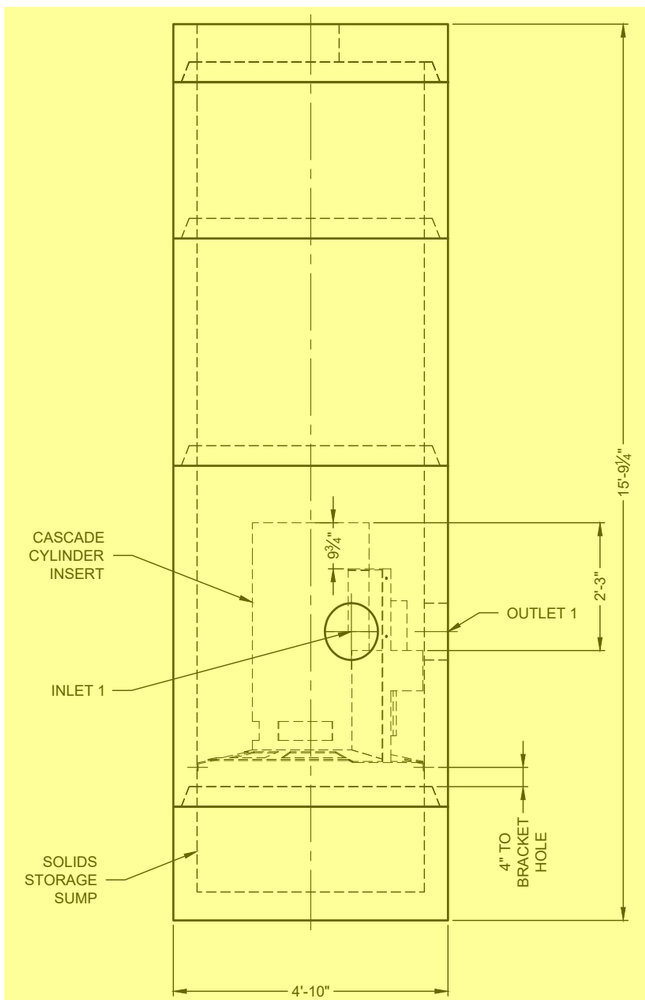

ELEVATION VIEW

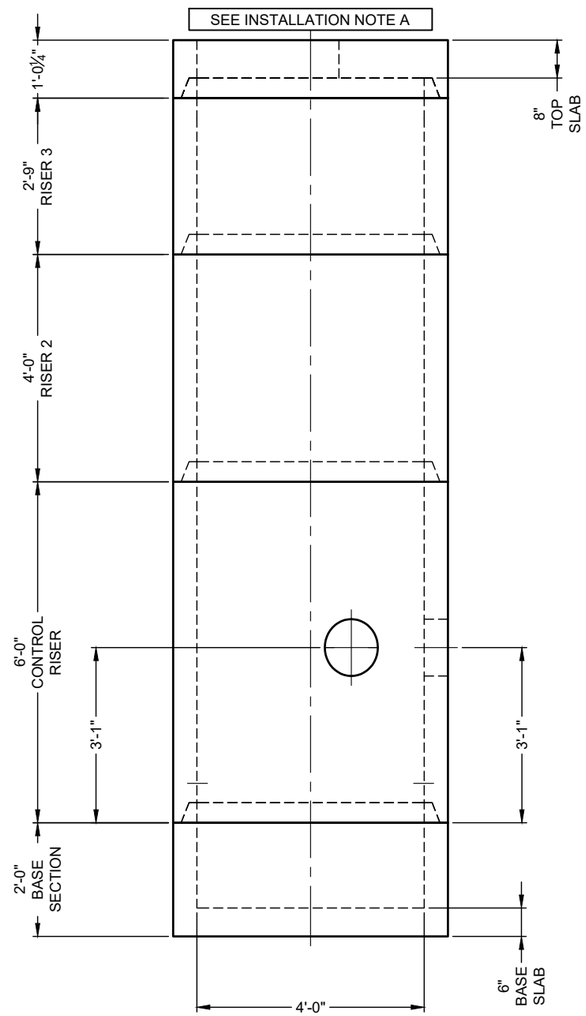

PRECAST COMPONENTS
INTERNALS NOT SHOWN

GENERAL NOTES
1. DESIGN LOADING - AASHTO HS-20
2. ALL PRECAST CONCRETE MANUFACTURED PARTS SHALL CONFORM TO ASTM C-478, WITH MINIMUM CONCRETE STRENGTH OF 4000 PSI AT 28 DAYS
3. JOINT SEALANT SHALL CONFORM TO ASTM C-990 OR ASTM C-443
4. GROUND WATER ELEVATION ASSUMED AT OUTLET INVERT
5. MANUFACTURING TOLERANCE = +/- 1/2-INCH
6. SOME HIDDEN LINES MAY BE OMITTED FOR CLARITY

INSTALLATION NOTES
A. PRECASTER TO SHIP ACCESS CASTINGS WITH STRUCTURE
B. REFER TO CONTECH ASSEMBLY INSTRUCTIONS FOR ADDITIONAL INFORMATION.
C. PRECASTER TO INSTALL INTERNAL COMPONENTS PRIOR TO SHIPPING UNLESS INSTRUCTED OTHERWISE BY CONTECH
D. PIPE OPENINGS SHALL BE STENCILED "INLET" OR "OUTLET" AS APPROPRIATE
E. APPLYING ALIGNMENT MARKS ON ALL PIECES OF MULTIPLE PIECE ASSEMBLIES IS ENCOURAGED
F. IF STRUCTURE IS DELIVERED IN MULTIPLE SECTIONS, EACH PIECE SHALL BE LABELED WITH THE CONTECH PROJECT NUMBER, SEQUENCE NUMBER AND SITE DESIGNATION

SITE INFORMATION
RIM ELEV. = 610.55+/-
TOP OF STRUCTURE = 609.57
INLET PIPE 1 INVERT ELEV. = 598.55
INLET PIPE 1 DIAMETER AND MATERIAL = 8"Ø PVC
OUTLET PIPE INVERT ELEV. = 598.55
OUTLET PIPE DIAMETER AND MATERIAL = 8"Ø PVC
OUTSIDE BOTTOM OF STRUCTURE ELEV. = 593.80

STRUCTURE WEIGHT
APPROXIMATE HEAVIEST PICK = 5500 LBS.
STRUCTURE IS DELIVERED IN 5 PIECES

TOP SLAB = 2000 LBS.
RISER 3 = 2500 LBS.
RISER 2 = 4000 LBS. LBS.
CONTROL RISER = 5500 LBS.
BASE SECTION = 3000 LBS.

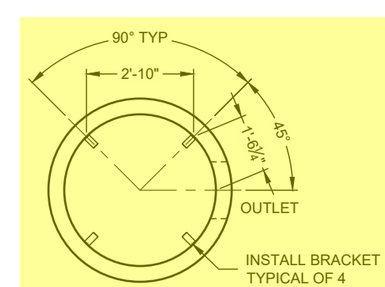

SUPPORT BRACKET LAYOUT PLAN VIEW

ICAST
5888 / 757440
LAYOUT 1A
7.64TS

CONTECH
FABRICATION
DRAWING

The design and information shown on this drawing is provided as a service to the project owner, engineer and contractor by CONTECH Construction Products Inc. or one of its affiliated companies ("CONTECH"). Neither this drawing nor any part thereof may be used, reproduced or modified in any manner without the prior written consent of CONTECH. Failure to comply is done at the user's own risk and CONTECH expressly disclaims any liability or responsibility for such use.

If discrepancies between the supplied information upon which the drawing is based and actual field conditions are encountered as site work progresses, these discrepancies must be reported to CONTECH immediately for re-evaluation of the design. CONTECH assumes no liability for errors in drawings or for designs based on incomplete or inaccurate information supplied by others.

MARK	DATE	REVISION DESCRIPTION	BY

CS-4 - 900640-015
QUIKTRIP NO. 0680
SAINT LOUIS, MO
SITE DESIGNATION: HDS B6

CONTECH® ENGINEERED SOLUTIONS LLC
A QUIKRETE® COMPANY
9100 Centre Pointe Dr., Suite 400, West Chester, OH 45069
800.338.1122 513.645.7000 513.645.7993 FAX
CASCADE® separator®
FOR PATENT INFORMATION, GO TO www.ContechES.com/IP

DATE: 03/04/26	
DESIGNED: LRP	DRAWN: LRP
CHECKED: LJK	APPROVED: LRP
PROJECT No.: 900640	SEQUENCE No.: 015
SHEET: 1 OF 1	

C:\USERS\LUKE.KAINIONEDRIVE - THE QUIKRETE COMPANIES\DYNAMICS365 - CONTECH - PROJECTS\900640\PRODUCTS\15-CASCADE 4'\DRAWINGS\900640-15-CS-4-CONFAB.DWG 6/4/2026 11:50 AM

26-2801 900640 QwikTrip No. 1

1810B4 V1600-4 Assembly

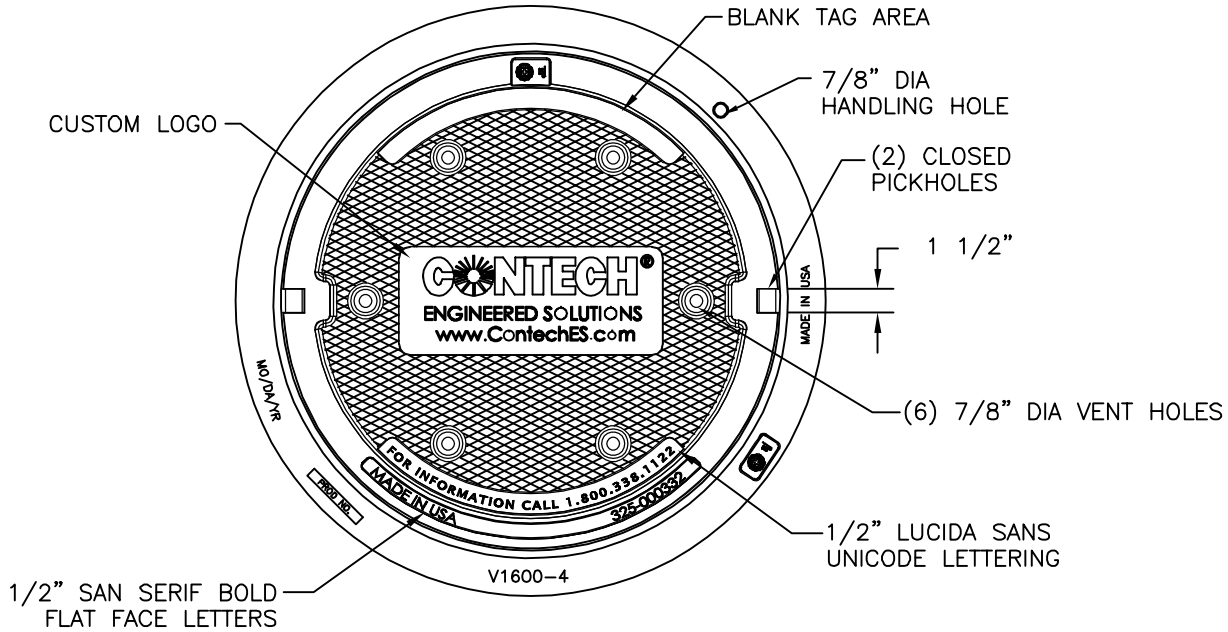

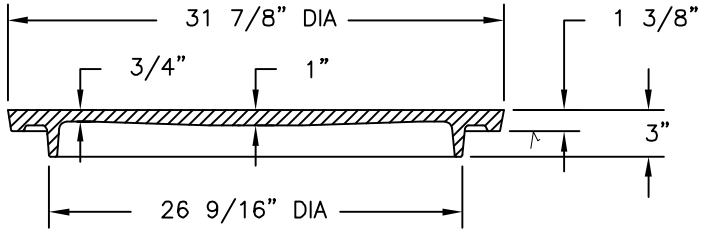

COVER SECTION

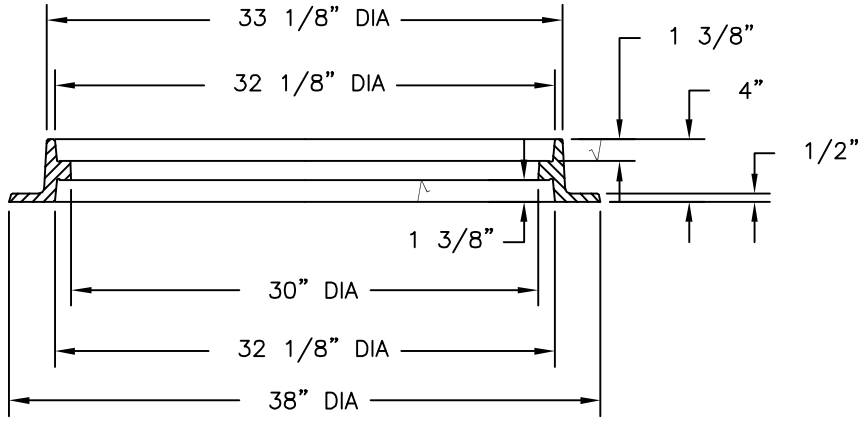

FRAME SECTION

Product Number

41600483

Design Features

-Materials
Cover
Gray Iron (CL35B)
Frame
Gray Iron (CL35B)

-Design Load
Heavy Duty
-Open Area
n/a
-Coating
Undipped
-√ Designates Machined Surface

Certification

- ASTM A48
- H25
-
-Country of Origin: USA

Major Components

00180783
41600410

Drawing Revision

5/9/2007 Designer: SMH
2/14/2022 Revised By: DAE

Disclaimer

Weights (lbs./kg) dimensions (inches/mm) and drawings provided for your guidance. We reserve the right to modify specifications without prior notice.

CONFIDENTIAL: This drawing is the property of EJ GROUP, Inc., and embodies confidential information, registered marks, patents, trade secret information, and/or know how that is the property of EJ GROUP, Inc. Copyright © 2012 EJ GROUP, Inc. All rights reserved.

Contact

800 626 4653
ejco.com

26-2801 900640 QwikTrip No. 1

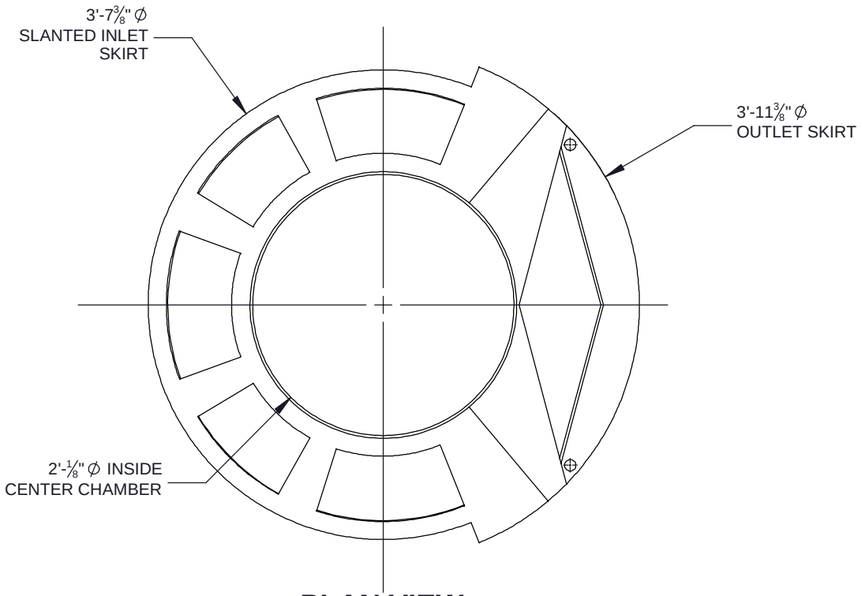

PLAN VIEW

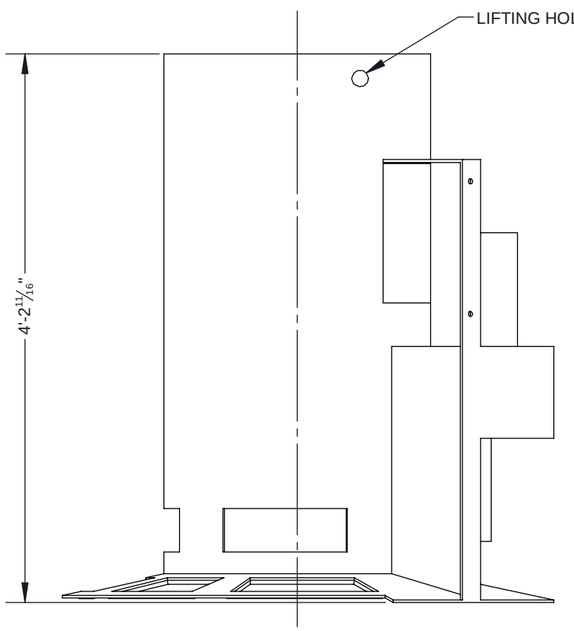

ELEVATION VIEW

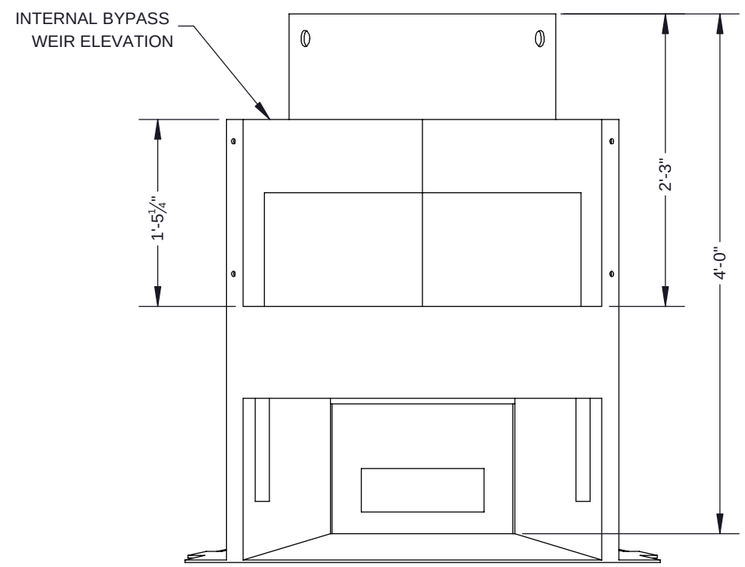

ELEVATION VIEW: OUTLET SIDE

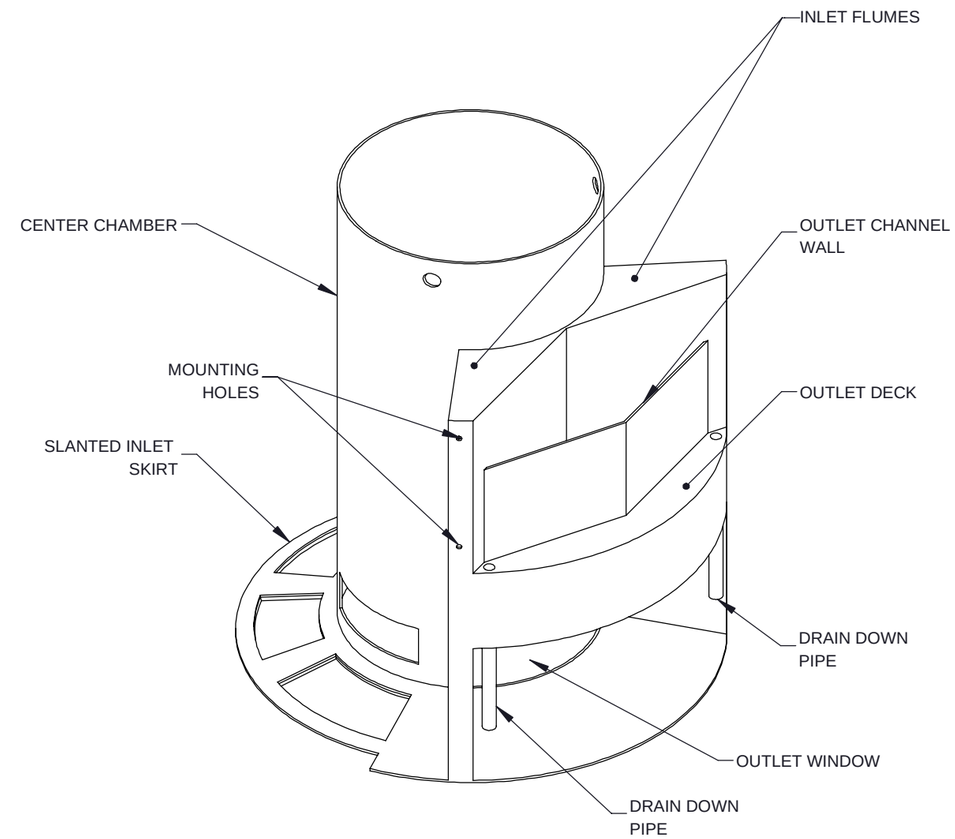

ISOMETRIC VIEW

NOTES:
1. SEE CASCADE SEPARATOR INSTALLATION GUIDE FOR ADDITIONAL INFORMATION

The design and information shown on this drawing is provided as a service to the project owner, engineer and contractor by Contech Engineered Solutions LLC, or one of its affiliated companies ("Contech"). Neither this drawing, nor any part thereof, may be used, reproduced or modified in any manner without the prior written consent of Contech. Failure to comply is done at the user's own risk and Contech expressly disclaims any liability or responsibility for such use.

If discrepancies between the supplied information upon which the drawing is based and actual field conditions are encountered as site work progresses, these discrepancies must be reported to Contech immediately for re-evaluation of the design. Contech accepts no liability for designs based on missing, incomplete or inaccurate information supplied by others.

CASCADE separator™

CONTECH® ENGINEERED SOLUTIONS LLC
www.ContechES.com
9025 Centre Pointe Dr., Suite 400, West Chester, OH 45069
800-338-1122 513-645-7000 513-645-7993 FAX

REFERENCE DETAIL
INTERNALS CS-4
CASCADE SEPARATOR

THIRD ANGLE PROJECTION

UNLESS OTHERWISE SPECIFIED
DIMENSIONS ARE IN INCHES

TOLERANCES:
FRACTIONAL ± 1/16
ANGLES ± 1 DEGREE
TWO PLACE DECIMAL ± 0.06
THREE PLACE DECIMAL ± 0.030

PART NUMBER: 325-003949		
APPROVED BY: M. BROOKS	DRAWN BY: M. BROOKS	
APPROVED BY DATE: 2021.10.21	DRAWN BY DATE: 2021.09.14	REV: B
SCALE: N/A	SHEET 1 OF 1	

26-2801 900640 QwikTrip No. 1

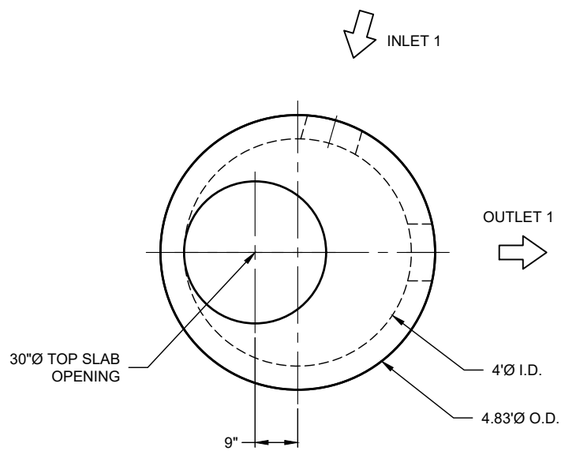

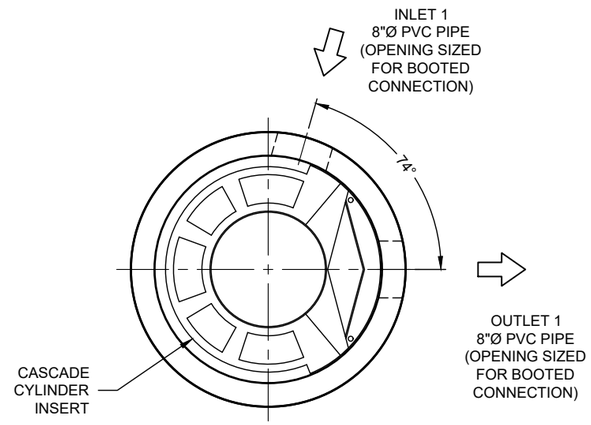

10-CS-4

ICAST to fully pre-assemble internal materials prior to shipment

PLAN VIEW
INTERNALS NOT SHOWN

PLAN VIEW FOR PIPE ORIENTATION
TOP SLAB NOT SHOWN

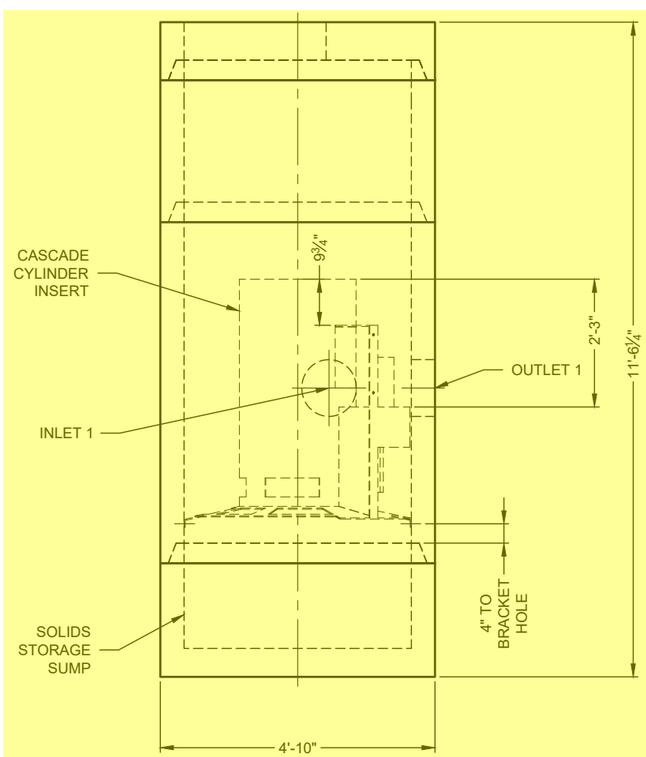

ELEVATION VIEW

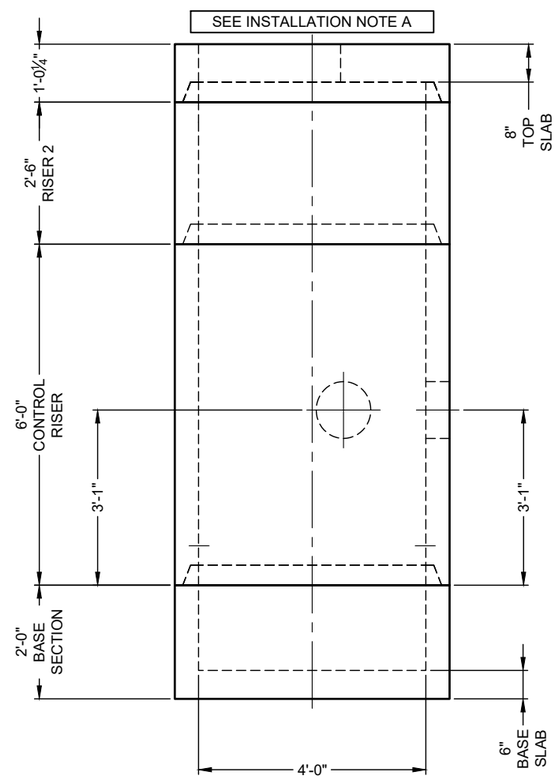

PRECAST COMPONENTS
INTERNALS NOT SHOWN

MATERIAL LIST

COUNT	DESCRIPTION	PART NUMBER	PROVIDED BY	INSTALLED BY
1	CS-4 CYLINDER INSERT, STD.	325-003949	CONTECH	PRECASTER
4	CS-4 ALUMINUM INSTALLATION BRACKETS	325-003956	CONTECH	PRECASTER
1	CS-4 HARDWARE KIT	325-003955	CONTECH	PRECASTER
2	BOOT FOR 8"Ø PVC PIPE		PRECASTER	PRECASTER
1	SEALANT FOR JOINTS		PRECASTER	CONTRACTOR
1	30"Ø X 4" FRAME AND COVER, EJ #41600483, OR EQUIV.	325-000332	CONTECH	CONTRACTOR

GENERAL NOTES
1. DESIGN LOADING - AASHTO HS-20
2. ALL PRECAST CONCRETE MANUFACTURED PARTS SHALL CONFORM TO ASTM C-478, WITH MINIMUM CONCRETE STRENGTH OF 4000 PSI AT 28 DAYS
3. JOINT SEALANT SHALL CONFORM TO ASTM C-990 OR ASTM C-443
4. GROUND WATER ELEVATION ASSUMED AT OUTLET INVERT
5. MANUFACTURING TOLERANCE = +/- 1/2-INCH
6. SOME HIDDEN LINES MAY BE OMITTED FOR CLARITY

INSTALLATION NOTES
A. PRECASTER TO SHIP ACCESS CASTINGS WITH STRUCTURE
B. REFER TO CONTECH ASSEMBLY INSTRUCTIONS FOR ADDITIONAL INFORMATION.
C. PRECASTER TO INSTALL INTERNAL COMPONENTS PRIOR TO SHIPPING UNLESS INSTRUCTED OTHERWISE BY CONTECH
D. PIPE OPENINGS SHALL BE STENCILED "INLET" OR "OUTLET" AS APPROPRIATE
E. APPLYING ALIGNMENT MARKS ON ALL PIECES OF MULTIPLE PIECE ASSEMBLIES IS ENCOURAGED
F. IF STRUCTURE IS DELIVERED IN MULTIPLE SECTIONS, EACH PIECE SHALL BE LABELED WITH THE CONTECH PROJECT NUMBER, SEQUENCE NUMBER AND SITE DESIGNATION

SITE INFORMATION
RIM ELEV. = 609.6+/-
TOP OF STRUCTURE = 608.77
INLET PIPE 1 INVERT ELEV. = 602.00
INLET PIPE 1 DIAMETER AND MATERIAL = 8"Ø PVC
OUTLET PIPE INVERT ELEV. = 602.00
OUTLET PIPE DIAMETER AND MATERIAL = 8"Ø PVC
OUTSIDE BOTTOM OF STRUCTURE ELEV. = 597.25

STRUCTURE WEIGHT
APPROXIMATE HEAVIEST PICK = 5500 LBS.
STRUCTURE IS DELIVERED IN 4 PIECES

TOP SLAB = 2000 LBS.
RISER 2 = 2500 LBS. LBS.
CONTROL RISER = 5500 LBS.
BASE SECTION = 3000 LBS.

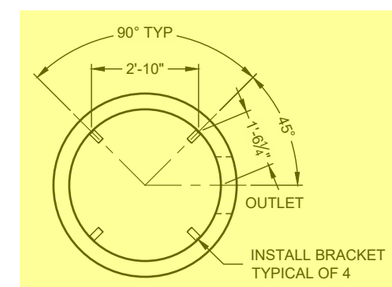

SUPPORT BRACKET LAYOUT PLAN VIEW

ICAST
5888 / 757440
LAYOUT 1A
5.80TS

CONTECH
FABRICATION
DRAWING

The design and information shown on this drawing is provided as a service to the owner, engineer and/or contractor by CONTECH Construction Products Inc. or one of its affiliated companies ("CONTECH"). Neither this drawing nor any part thereof may be used, reproduced or modified in any manner without the prior written consent of CONTECH. Failure to comply is done at the user's own risk and CONTECH expressly disclaims any liability or responsibility for such use.

If discrepancies between the supplied information upon which the drawing is based and actual field conditions are encountered as site work progresses, these discrepancies must be reported to CONTECH immediately for re-evaluation of the design. CONTECH accepts no liability for designs based on missing, incomplete or inaccurate information supplied by others.

MARK	DATE	REVISION DESCRIPTION	BY

CS-4 - 900640-010
QUIKTRIP NO. 0680
SAINT LOUIS, MO
SITE DESIGNATION: HDS A10

CONTECH ENGINEERED SOLUTIONS LLC
9100 Centre Pointe Dr., Suite 400, West Chester, OH 45069
800-338-1122 513-645-7000 513-645-7993 FAX
CASCADE separator®
FOR PATENT INFORMATION, GO TO www.ContechES.com/IP

DATE: 05/22/26	
DESIGNED: LRP	DRAWN: LRP
CHECKED: LJK	APPROVED: LJK
PROJECT No.: 900640	SEQUENCE No.: 010
SHEET: 1 OF 1	

C:\USERS\LUKE.KAIN\ONEDRIVE - THE QUIKRETE COMPANIES\DYNAMICS365 - CONTECH - PROJECTS\900640\PRODUCTS\10-CASCADE 4'\DRAWINGS\900640-10-CS-4-CONFAB.DWG 6/4/2026 12:42 PM

26-2801 900640 QwikTrip No. 1

1810B4 V1600-4 Assembly

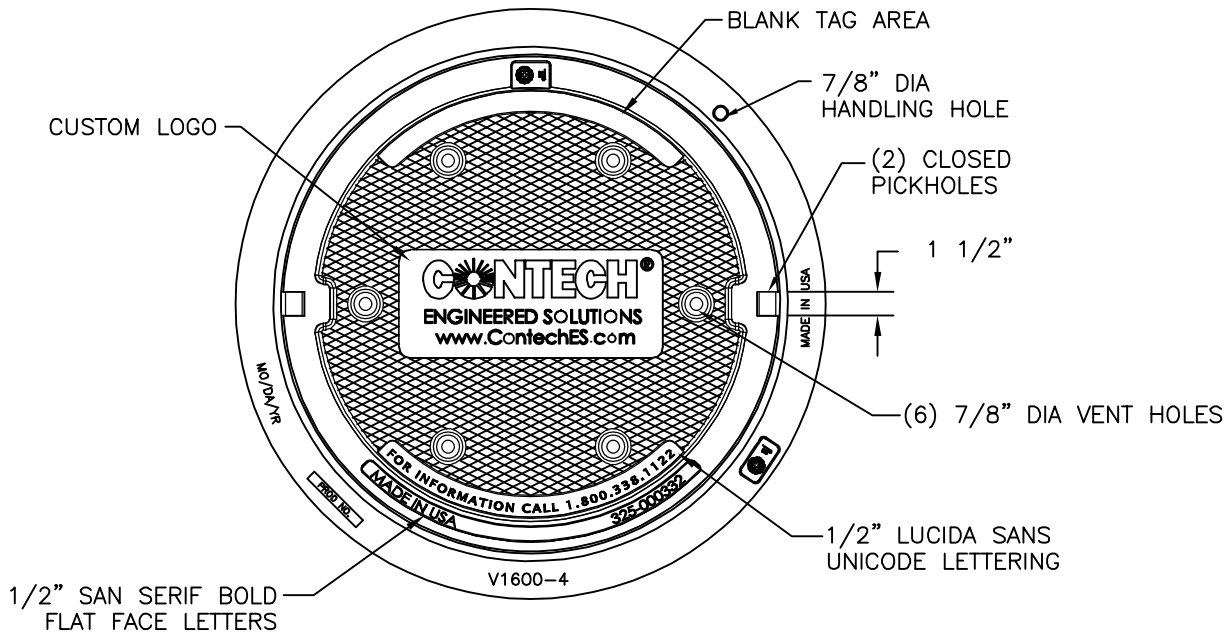

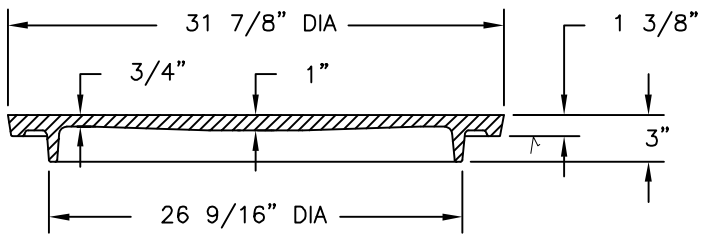

COVER SECTION

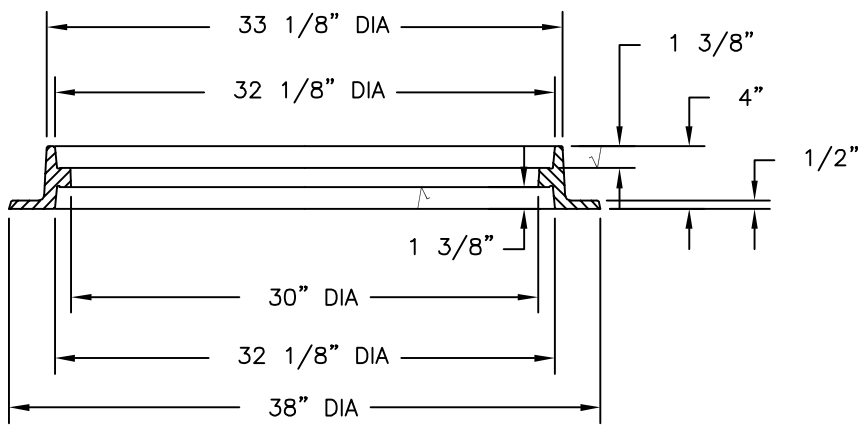

FRAME SECTION

Product Number

41600483

Design Features

-Materials
Cover
Gray Iron (CL35B)
Frame
Gray Iron (CL35B)

-Design Load
Heavy Duty
-Open Area
n/a
-Coating
Undipped
-√ Designates Machined Surface

Certification

- ASTM A48
- H25
-
-Country of Origin: USA

Major Components

00180783
41600410

Drawing Revision

5/9/2007 Designer: SMH
2/14/2022 Revised By: DAE

Disclaimer

Weights (lbs./kg) dimensions (inches/mm) and drawings provided for your guidance. We reserve the right to modify specifications without prior notice.

CONFIDENTIAL: This drawing is the property of EJ GROUP, Inc., and embodies confidential information, registered marks, patents, trade secret information, and/or know how that is the property of EJ GROUP, Inc. Copyright © 2012 EJ GROUP, Inc. All rights reserved.

Contact

800 626 4653
ejco.com

26-2801 900640 QwikTrip No. 1

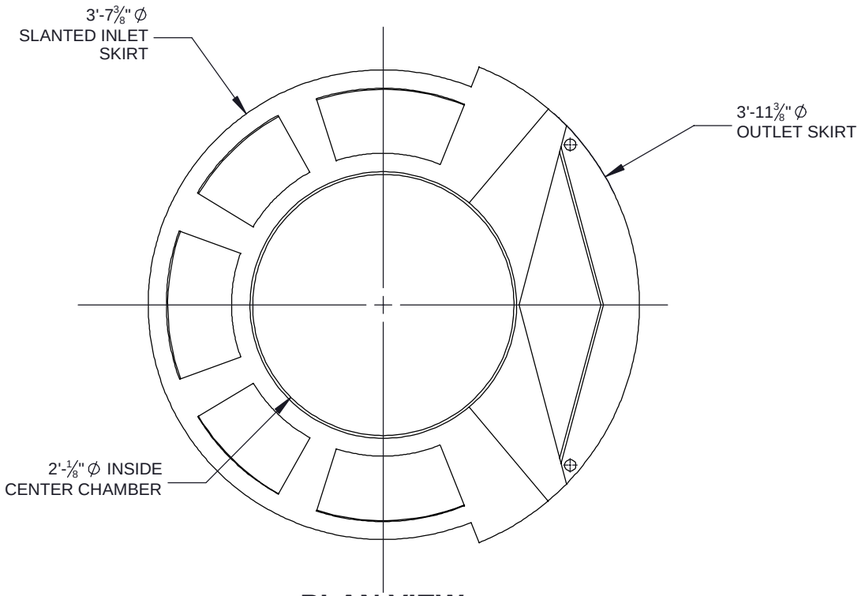

PLAN VIEW

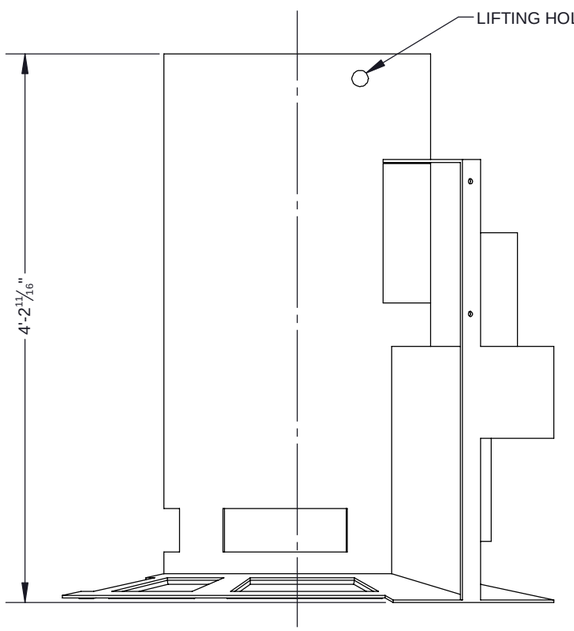

ELEVATION VIEW

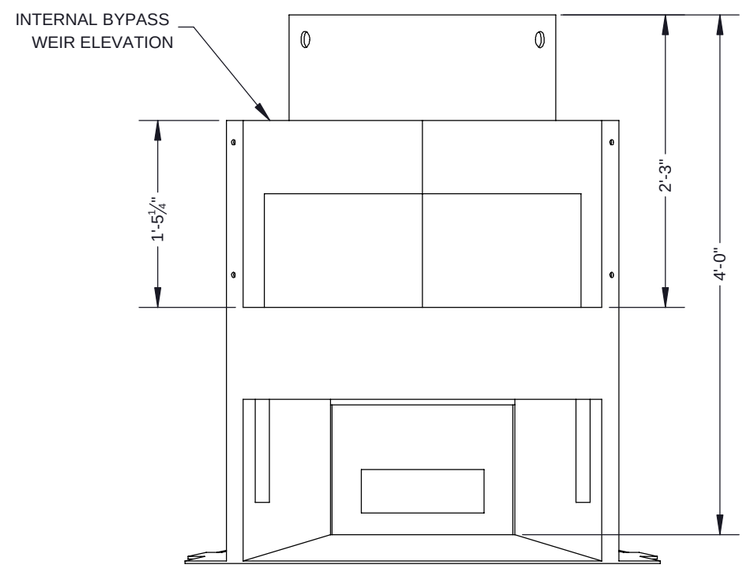

ELEVATION VIEW: OUTLET SIDE

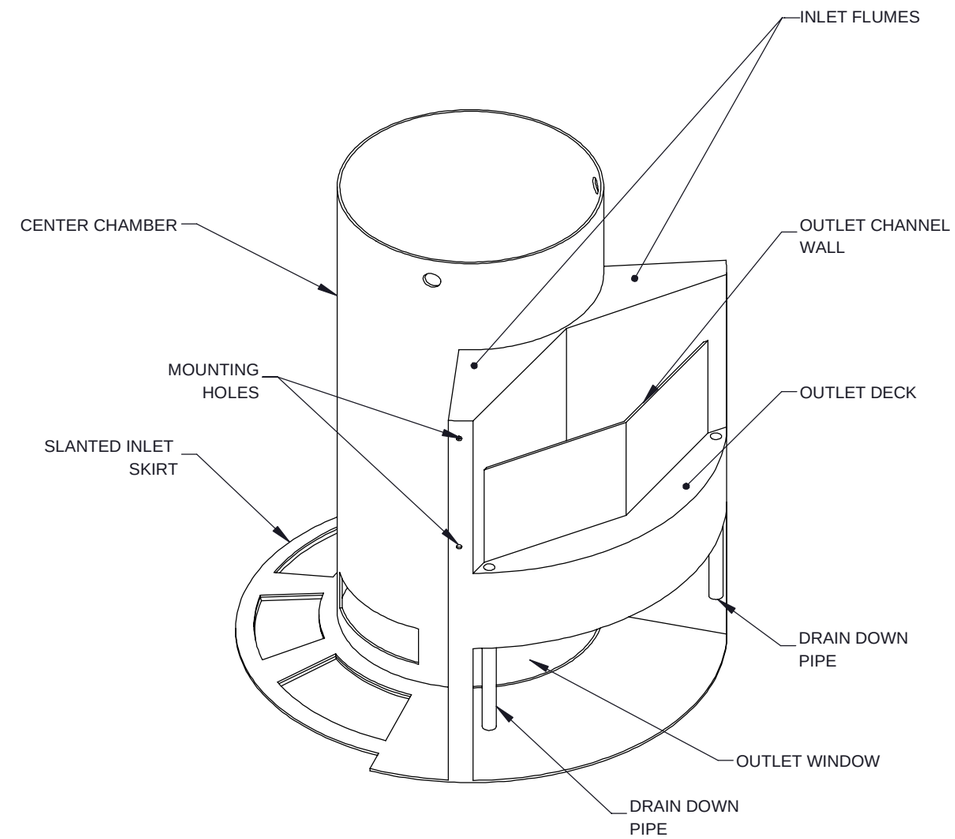

ISOMETRIC VIEW

NOTES:
1. SEE CASCADE SEPARATOR INSTALLATION GUIDE FOR ADDITIONAL INFORMATION

The design and information shown on this drawing is provided as a service to the project owner, engineer and contractor by Contech Engineered Solutions LLC, or one of its affiliated companies ("Contech"). Neither this drawing, nor any part thereof, may be used, reproduced or modified in any manner without the prior written consent of Contech. Failure to comply is done at the user's own risk and Contech expressly disclaims any liability or responsibility for such use.

If discrepancies between the supplied information upon which the drawing is based and actual field conditions are encountered as site work progresses, these discrepancies must be reported to Contech immediately for re-evaluation of the design. Contech accepts no liability for designs based on missing, incomplete or inaccurate information supplied by others.

CASCADE separator™

CONTECH® ENGINEERED SOLUTIONS LLC
www.ContechES.com
9025 Centre Pointe Dr., Suite 400, West Chester, OH 45069
800-338-1122 513-645-7000 513-645-7993 FAX

REFERENCE DETAIL
INTERNALS CS-4
CASCADE SEPARATOR

THIRD ANGLE PROJECTION

UNLESS OTHERWISE SPECIFIED
DIMENSIONS ARE IN INCHES

TOLERANCES:
FRACTIONAL ± 1/16
ANGLES ± 1 DEGREE
TWO PLACE DECIMAL ± 0.06
THREE PLACE DECIMAL ± 0.030

PART NUMBER: 325-003949		
APPROVED BY: M. BROOKS	DRAWN BY: M. BROOKS	
APPROVED BY DATE: 2021.10.21	DRAWN BY DATE: 2021.09.14	REV: B
SCALE: N/A	SHEET 1 OF 1	

Job Name: 26-1645 East Bank Regional ARV's Job Location: Nashville, TN Contractor: Garney Companies, Inc.	Plant: Beaver Dam 6/26/2026 12:58:18 PM	Tech: S. Felletter PC: J. Jarvis	

Structure ID: ARV 8+22

P2 BX048096-06RVFX BOX RISER 6inW, Variable Ht w/ XYPEX F/F

P4) 30" - CASTING HEIGHT - 4"	0 lb
P3) 48" x 96" - CB FLAT TOP 8"W w/30"Hole w/ XYPEX F/F - 8"	3875 lb
P2) 48" x 96" - BOX RISER 6inW, Variable Ht w/ XYPEX F/F - 74"	10793 lb
P1) 48" x 96" - P.I.P. BY OTHERS - BTM SLAB F/n - 0"	0 lb
1) CASTING - JBS 2220 F/G	250 lb
2) 48" x 96" - Conseal CS-102 1.00" (Double)	0 lb
4) DOGHOUSE - 20"x22"	0 lb
Structure Total:	14918 lb

Structure Notes: .
1. PER ASTM C913 SPECIFICATIONS.
2. CONCRETE = 5,000 PSI AT 28 DAYS.
3. NO INVERT CHANNEL.
4. CASTING BY ICAST (JBS 2220 F/G).
5. TOP SLAB TO HAVE A FLAT TOP & FLOATED FINISH.
6. PE STAMPED DRAWINGS & CALC'S TO BE PROVIDED AFTER RECEIPT OF GENERAL DESIGN APPROVAL.
.
REINFORCING PER ASTM A615 (GRADE 60).
- TOP SLAB (As .62) #5 BARS AT 6" C.C.E.W.
- WALLS (As .31) #5 BARS AT 12" C.C.E.W.

Rim: 419.625' Rim to Invert: 6.865' Slack: 0.38" Sump: 4" Step Position:

Position	Elev	Angle	Ext. (cw)	Pipe	Pipe OD	Connector	Hole	Horz Size	Up (_)	Offset
Invert 1	412.76'	90°	78"	16" DI	17.5"	DOGHOUSE 20"x22"	20" x 22"	20"	1"	24"
Invert 2	412.76'	90°	30"	16" DI	17.5"	DOGHOUSE 20"x22"	20" x 22"	20"	1"	-24"
Invert 3	412.76'	270°	78"	16" DI	17.5"	DOGHOUSE 20"x22"	20" x 22"	20"	1"	24"
Invert 4	412.76'	270°	30"	16" DI	17.5"	DOGHOUSE 20"x22"	20" x 22"	20"	1"	-24"
Invert 5										
Invert 6										
Invert 7										
Invert 8										

RIGHT-SIDE UP VIEW (int. dimensions)

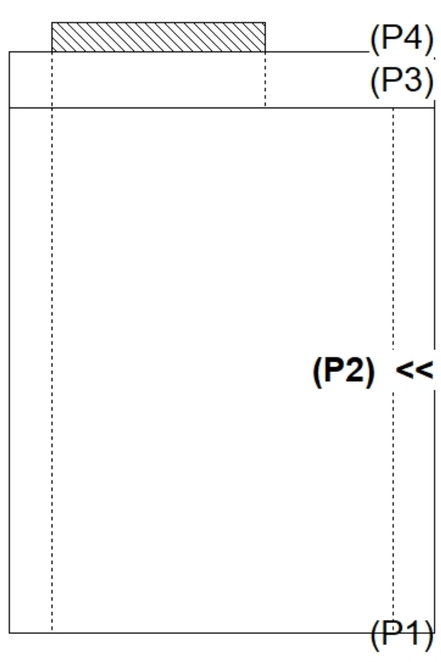

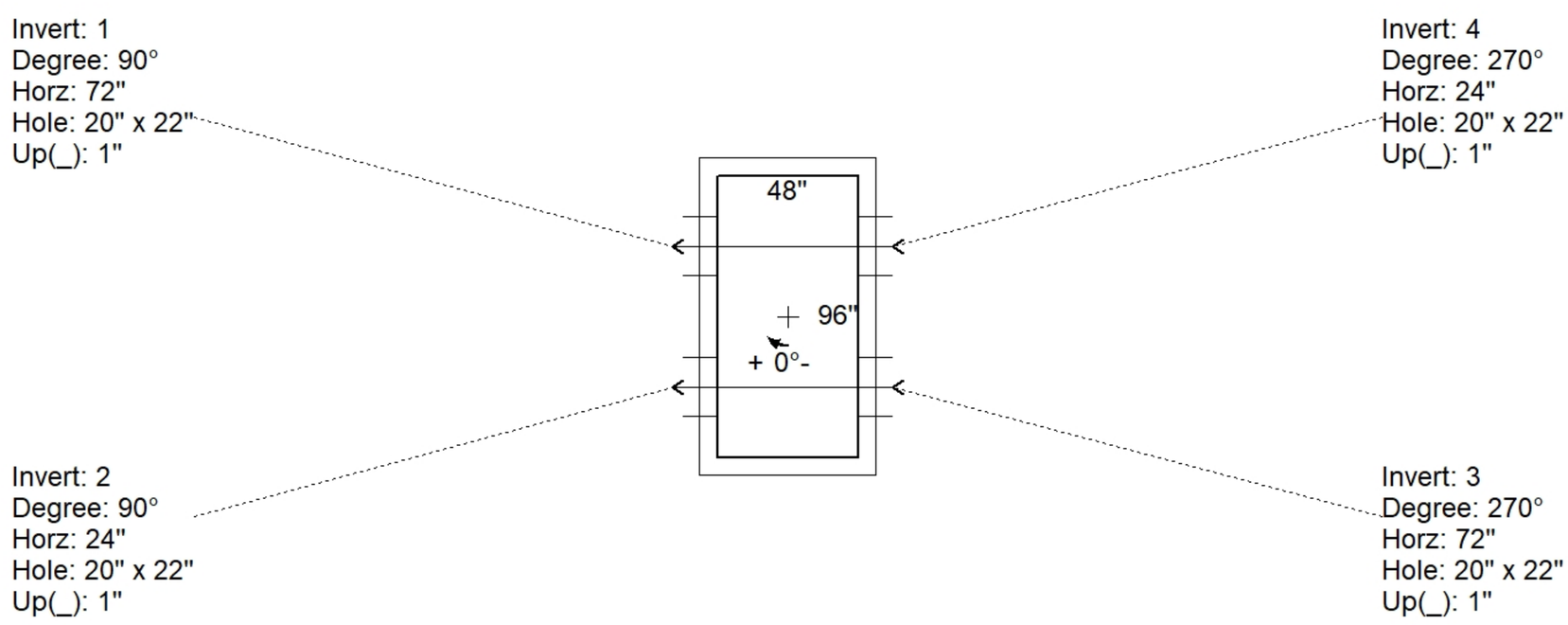

INSIDE WALL DIMENSIONS

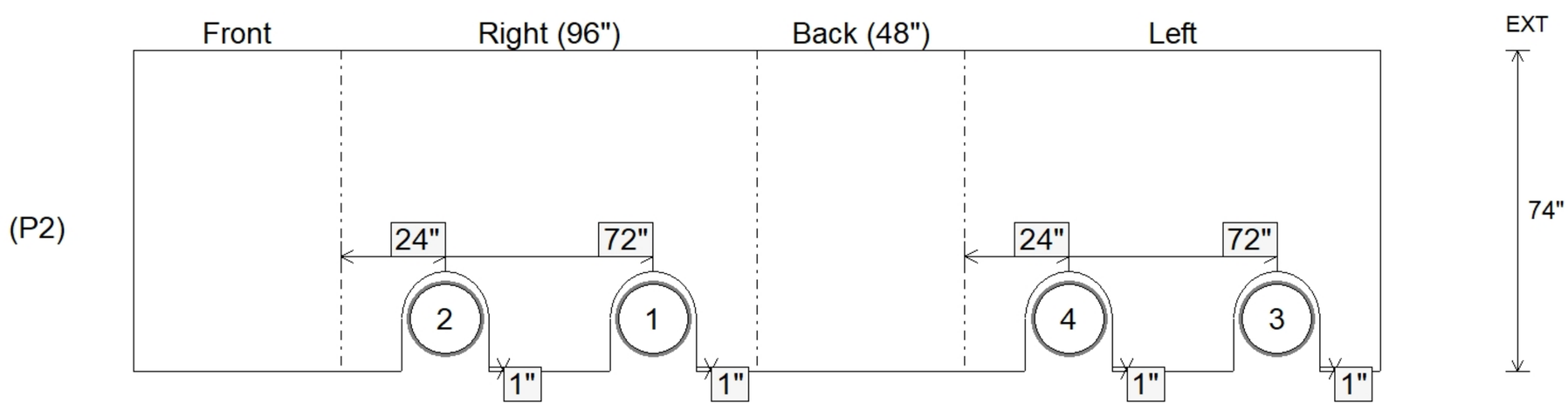

Coating (Int): Coating (Ext):	Seam Up: Flat Seam Dn: Flat	Wall Thickness: 6" Floor Height: 0"	Height (Int): 74" Height (Ext): 74"	Weight (Net): 10793 lb Volume (Net): 2.76cu.yd

Job Name: 26-1645 East Bank Regional ARV's Job Location: Nashville, TN Contractor: Garney Companies, Inc.	Plant: Beaver Dam 6/24/2026 3:06:53 PM	Tech: S. Felletter PC: J. Jarvis	

Structure ID: ARV 8+22

P3 BX048096-06LD08SX CB FLAT TOP 8"W w/30"Hole w/ XYPEX F/F

P4) 30" - CASTING HEIGHT - 4"	0 lb
P3) 48" x 96" - CB FLAT TOP 8"W w/30"Hole w/ XYPEX F/F - 8"	3875 lb
P2) 48" x 96" - BOX RISER 6inW, Variable Ht w/ XYPEX F/F - 74"	10793 lb
P1) 48" x 96" - P.I.P. BY OTHERS - BTM SLAB F/n - 0"	0 lb
1) CASTING - JBS 2220 F/G	250 lb
2) 48" x 96" - Conseal CS-102 1.00" (Double)	0 lb
4) DOGHOUSE - 20"x22"	0 lb
Structure Total:	14918 lb

Structure Notes: .
1. PER ASTM C913 SPECIFICATIONS.
2. CONCRETE = 5,000 PSI AT 28 DAYS.
3. NO INVERT CHANNEL.
4. CASTING BY ICAST (JBS 2220 F/G).
5. TOP SLAB TO HAVE A FLAT TOP & FLOATED FINISH.
6. PE STAMPED DRAWINGS & CALC'S TO BE PROVIDED AFTER RECEIPT OF GENERAL DESIGN APPROVAL.

.
REINFORCING PER ASTM A615 (GRADE 60).
- TOP SLAB (As .62) #5 BARS AT 6" C.C.E.W.
- WALLS (As .31) #5 BARS AT 12" C.C.E.W.

NOTES:
1. MANUFACTURED TO ASTM C-931 (LATEST REVISION).
2. CONCRETE: 5,000 PSI AT 28 DAYS.
3. REINFORCING: #5 BAR @ 6" C.C.E.W. (GRADE 60).
4. XYPEX ADMIXTURE.

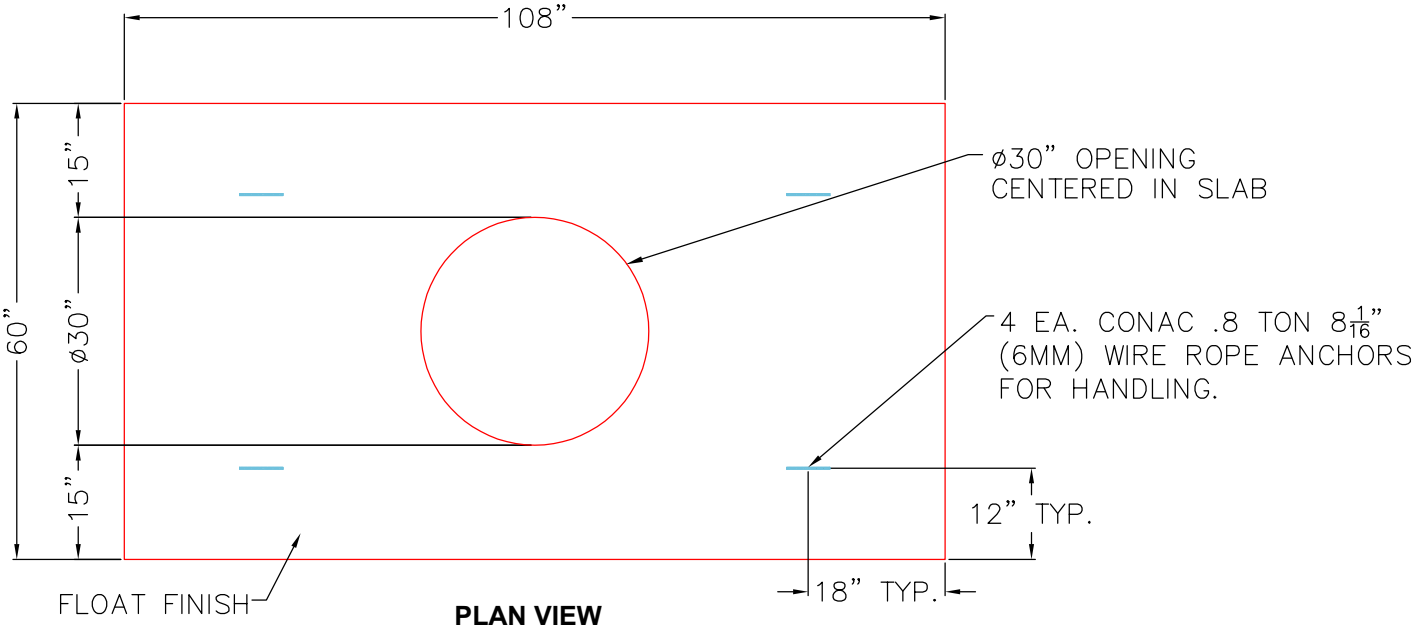

PLAN VIEW

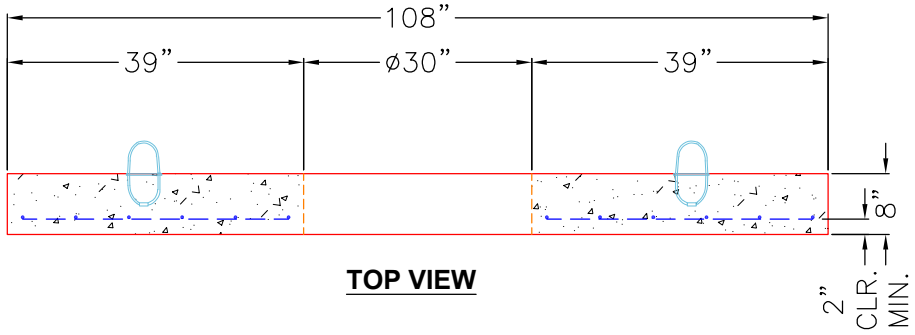

TOP VIEW

Coating (Int): Coating (Ext):	Seam Up: Flat Seam Dn: Flat	Wall Thickness: 6"	Height (Ext): 8"	Weight (Net): 3875 lb Volume (Net): 0.99cu.yd

Job Name: 26-1645 East Bank Regional ARV's Job Location: Nashville, TN Contractor: Garney Companies, Inc.	Plant: Beaver Dam 6/24/2026 3:06:52 PM	Tech: S. Felletter PC: J. Jarvis	

Structure ID: ARV 4+84

P3 BX048096-06LD08SX CB FLAT TOP 8"W w/30"Hole w/ XYPEX F/F

P4) 30" - CASTING HEIGHT - 4"	0 lb
P3) 48" x 96" - CB FLAT TOP 8"W w/30"Hole w/ XYPEX F/F - 8"	3875 lb
P2) 48" x 96" - BOX RISER 6inW, Variable Ht w/ XYPEX F/F - 68"	9850 lb
P1) 48" x 96" - P.I.P. BY OTHERS - BTM SLAB F/n - 0"	0 lb
1) CASTING - JBS 2220 F/G	250 lb
2) 48" x 96" - Conseal CS-102 1.00" (Double)	0 lb
4) DOGHOUSE - 20"x22"	0 lb
Structure Total:	13976 lb

Structure Notes: .
1. PER ASTM C913 SPECIFICATIONS.
2. CONCRETE = 5,000 PSI AT 28 DAYS.
3. NO INVERT CHANNEL.
4. CASTING BY ICAST (JBS 2220 F/G).
5. TOP SLAB TO HAVE A FLAT TOP & FLOATED FINISH.
6. PE STAMPED DRAWINGS & CALC'S TO BE PROVIDED AFTER RECEIPT OF GENERAL DESIGN APPROVAL.

.
REINFORCING PER ASTM A615 (GRADE 60).
- TOP SLAB (As .62) #5 BARS AT 6" C.C.E.W.
- WALLS (As .31) #5 BARS AT 12" C.C.E.W.

NOTES:
1. MANUFACTURED TO ASTM C-931 (LATEST REVISION).
2. CONCRETE: 5,000 PSI AT 28 DAYS.
3. REINFORCING: #5 BAR @ 6" C.C.E.W. (GRADE 60).
4. XYPEX ADMIXTURE.

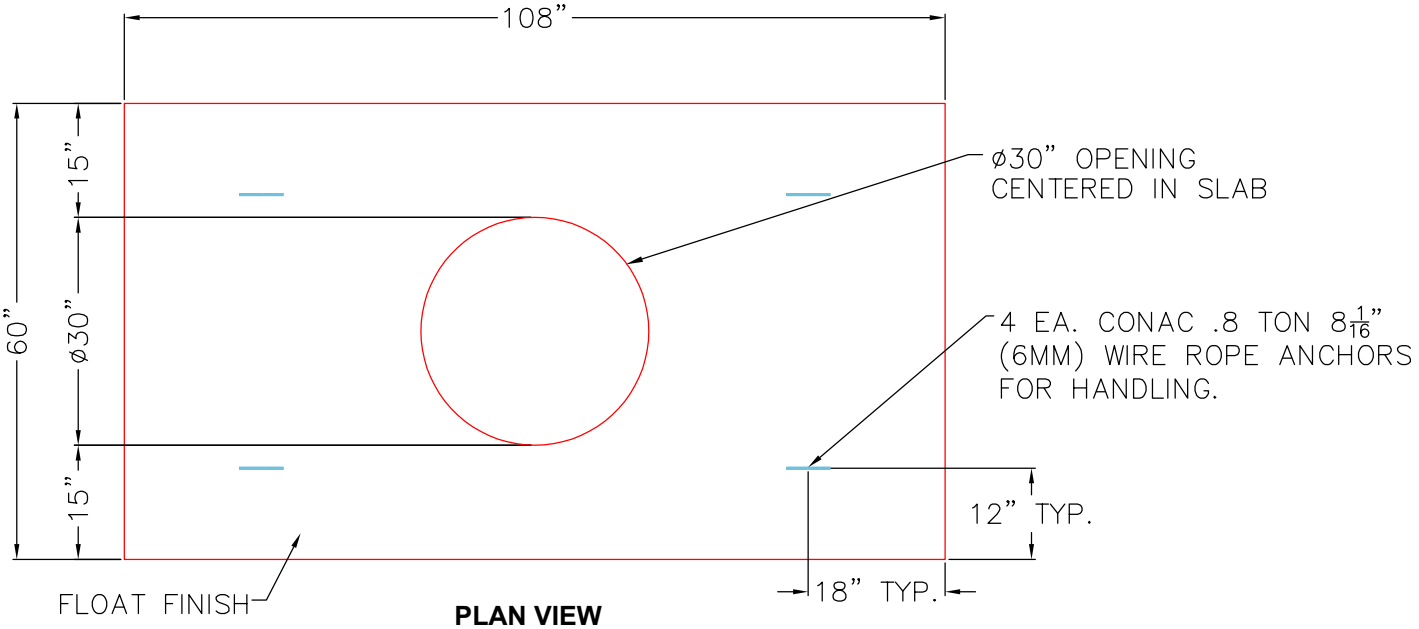

PLAN VIEW

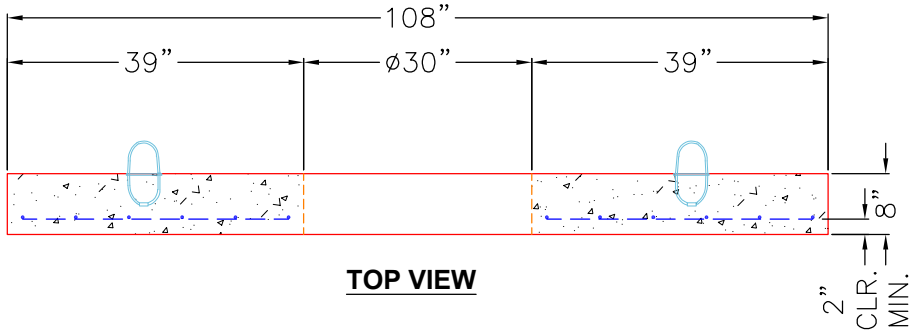

TOP VIEW

Coating (Int): Coating (Ext):	Seam Up: Flat Seam Dn: Flat	Wall Thickness: 6"	Height (Ext): 8"	Weight (Net): 3875 lb Volume (Net): 0.99cu.yd

Job Name: 26-1645 East Bank Regional ARV's
Job Location: Nashville, TN
Contractor: Garney Companies, Inc.

Plant: Beaver Dam
6/26/2026 12:58:16 PM

Tech: S. Felletter
PC: J. Jarvis

Structure ID: ARV 4+84

P2 BX048096-06RVFX BOX RISER 6inW, Variable Ht w/ XYPEX F/F

P4) 30" - CASTING HEIGHT - 4"	0 lb
P3) 48" x 96" - CB FLAT TOP 8"W w/30"Hole w/ XYPEX F/F - 8"	3875 lb
P2) 48" x 96" - BOX RISER 6inW, Variable Ht w/ XYPEX F/F - 68"	9850 lb
P1) 48" x 96" - P.I.P. BY OTHERS - BTM SLAB F/n - 0"	0 lb
1) CASTING - JBS 2220 F/G	250 lb
2) 48" x 96" - Conseal CS-102 1.00" (Double)	0 lb
4) DOGHOUSE - 20"x22"	0 lb
Structure Total:	13976 lb

Structure Notes: .
1. PER ASTM C913 SPECIFICATIONS.
2. CONCRETE = 5,000 PSI AT 28 DAYS.
3. NO INVERT CHANNEL.
4. CASTING BY ICAST (JBS 2220 F/G).
5. TOP SLAB TO HAVE A FLAT TOP & FLOATED FINISH.
6. PE STAMPED DRAWINGS & CALC'S TO BE PROVIDED AFTER RECEIPT OF GENERAL DESIGN APPROVAL.
.
REINFORCING PER ASTM A615 (GRADE 60).
- TOP SLAB (As .62) #5 BARS AT 6" C.C.E.W.
- WALLS (As .31) #5 BARS AT 12" C.C.E.W.

Rim: 421.65' Rim to Invert: 6.35' Slack: 0.2" Sump: 4" Step Position:

Position	Elev	Angle	Ext. (cw)	Pipe	Pipe OD	Connector	Hole	Horz Size	Up (_)	Offset
Invert 1	415.3'	90°	72"	16" DI	17.5"	DOGHOUSE 20"x22"	20" x 22"	20"	1"	18"
Invert 2	415.3'	90°	36"	16" DI	17.5"	DOGHOUSE 20"x22"	20" x 22"	20"	1"	-18"
Invert 3	415.3'	270°	72"	16" DI	17.5"	DOGHOUSE 20"x22"	20" x 22"	20"	1"	18"
Invert 4	415.3'	270°	36"	16" DI	17.5"	DOGHOUSE 20"x22"	20" x 22"	20"	1"	-18"
Invert 5										
Invert 6										
Invert 7										
Invert 8										

RIGHT-SIDE UP VIEW (int. dimensions)

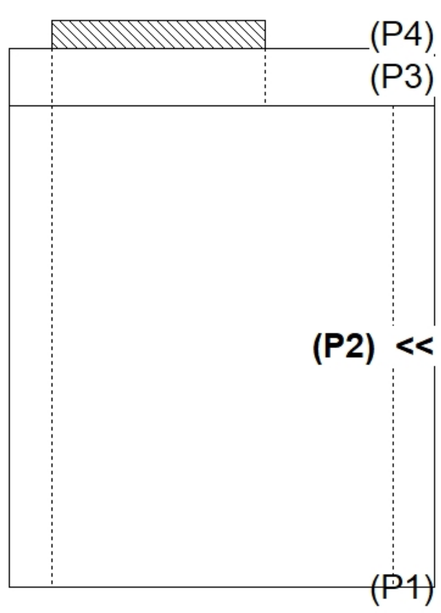

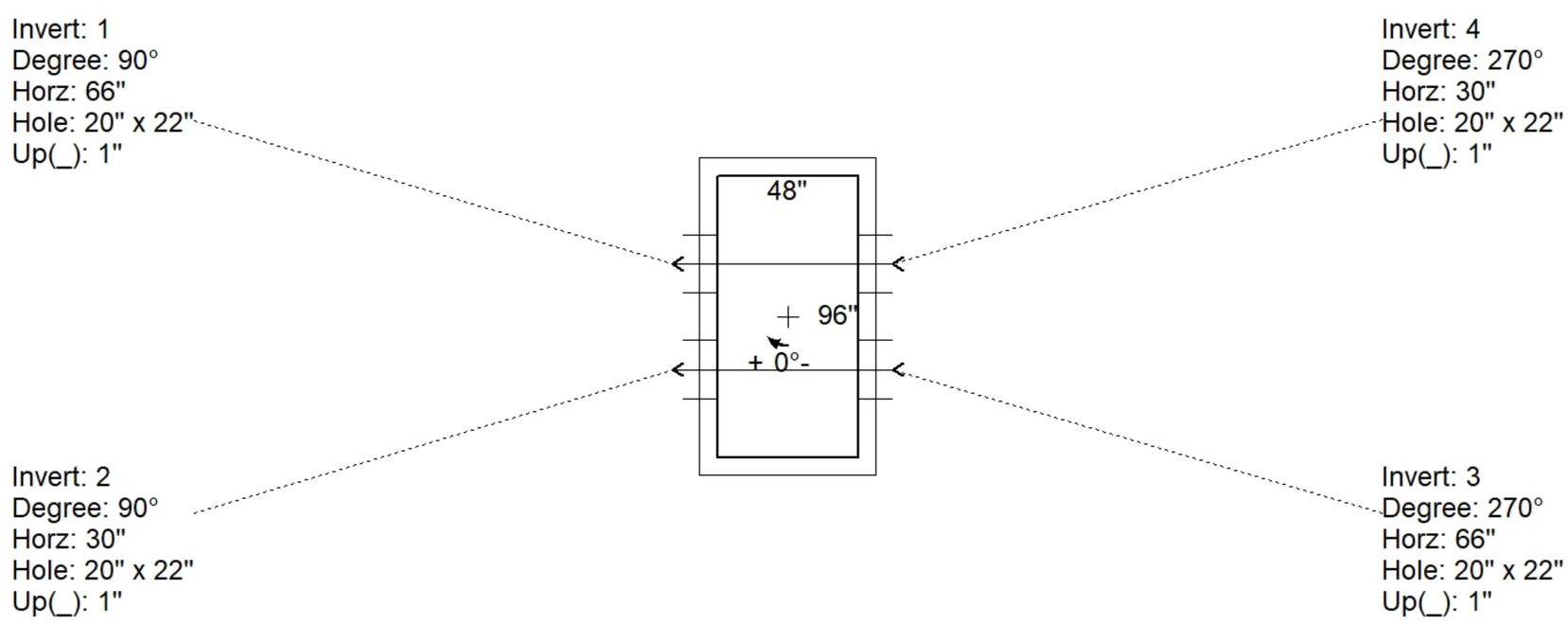

INSIDE WALL DIMENSIONS

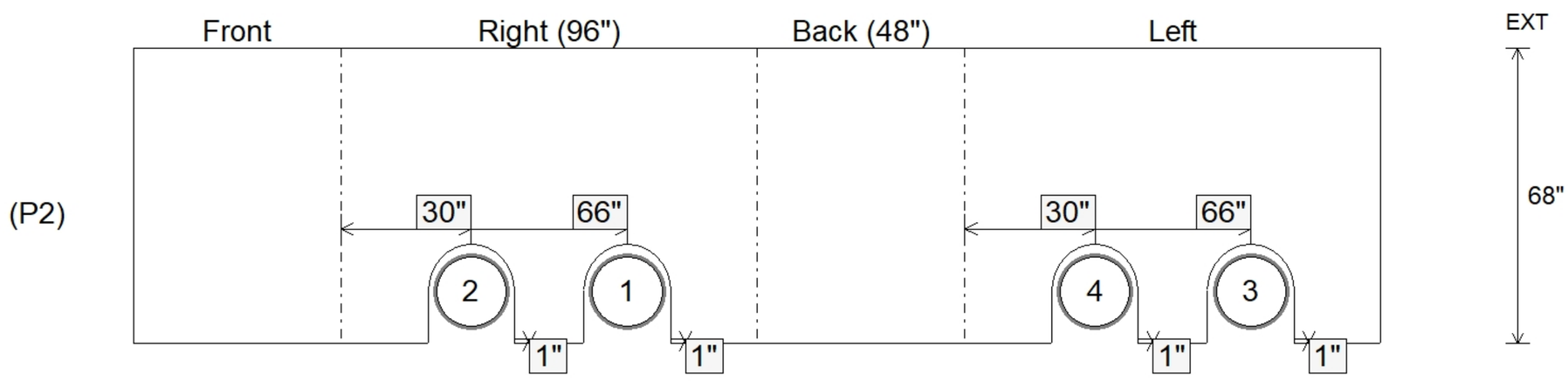

Coating (Int): Coating (Ext):	Seam Up: Flat Seam Dn: Flat	Wall Thickness: 6" Floor Height: 0"	Height (Int): 68" Height (Ext): 68"	Weight (Net): 9850 lb Volume (Net): 2.52cu.yd

Job Name: 25-1684P12 KYTC Jefferson Co. Call 200 (251007) Job Location: I-264 Louisville, Ky. Contractor: Cleary Construction, Inc.	Plant: Beaver Dam, Ky. 6/24/2026 1:33:49 PM	Tech: J. Coppage PC: T. Ryan	

Structure ID: 1021+10 LT CBIB INLET 20

P2 BX024036-08TS024024 CB FT REDUCER 24"X24" HOLE

P4) 8" x 120" - CB INLET KY B 10' TOP - 9"	1660 lb
P3) 24" x 120" - CB INLET KY B 10' BOTTOM LEFT - 17"	2650 lb
P2) 24" x 36" - CB FT REDUCER 24"X24" HOLE - 8"	1010 lb
P1) 24" x 36" - BOX BASE 8inW, 8inF - 24"	3318 lb
1) 24" x 36" - Conseal CS-102 1.00"	0 lb
1) 24" x 24" - Conseal CS-102 1.00"	0 lb
2) Hole - 22	0 lb
Structure Total:	8638 lb

Structure Notes: .
-KYTC STATE PROJECT 251007
-REINFORCING: #5 BAR @ 12" C/C E.W. (TYP.)
-CS-102 BUTYL REQUIRED (SUPPLIED BY ICAST).
-KYTC CERTIFICATIONS REQUIRED.

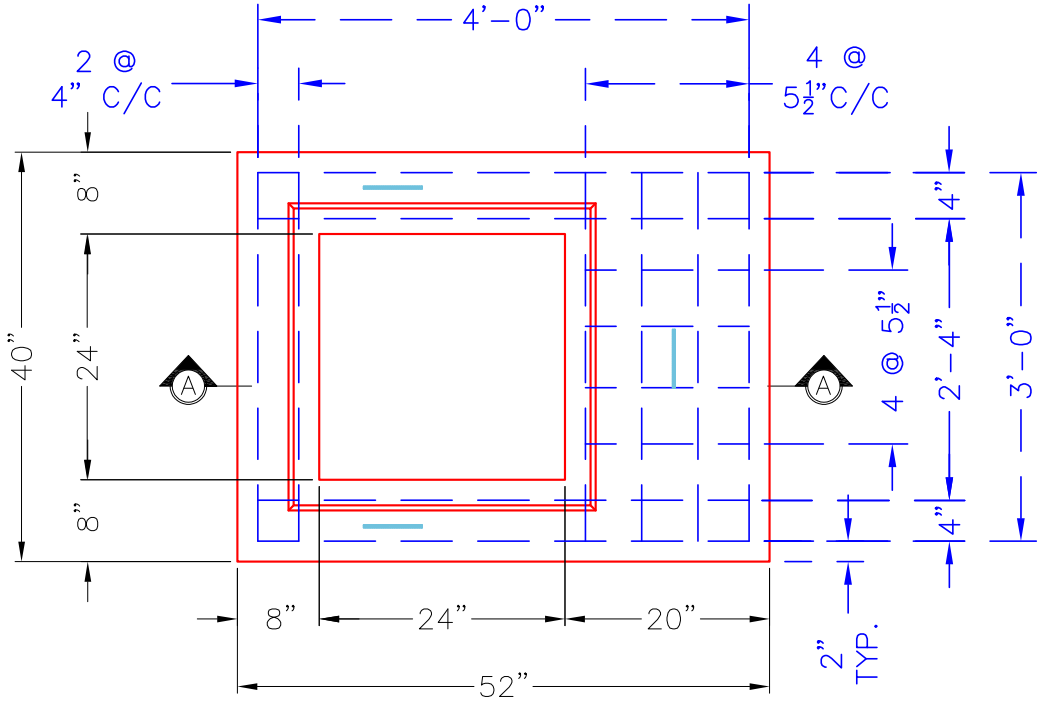

PLAN VIEW

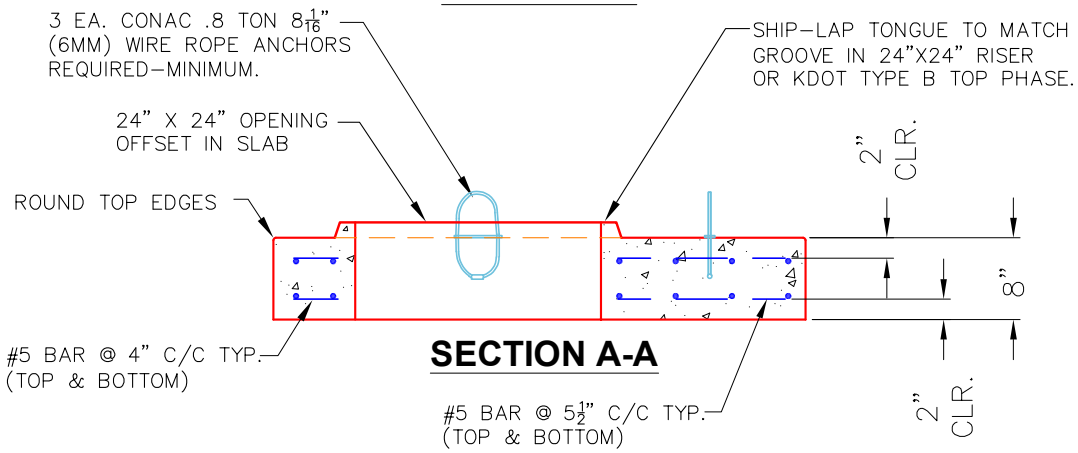

SECTION A-A

NOTES:

-CONCRETE: 4500 PSI @ 28 DAYS.
-MANUFACTURED TO KYTC & ASTM C-913 SPECIFICATIONS.
-REINFORCING: #5 BAR AS SHOWN-GRADE 60. (T&B LAYER)
-KYTC STATE CERTIFICATIONS REQUIRED.
-3 EA. CONAC WIRE LIFTING LOOPS REQUIRED (MIN.)

#5 BAR CUT LIST
8 EA. @ 48" LG.
12 EA. @ 36" LG.
8 EA. @ 16" LG.

Coating (Int): Coating (Ext):	Seam Up: Tongue Seam Dn: Flat	Wall Thickness: 8"	Height (Ext): 8"	Weight (Net): 1010 lb Volume (Net): 0.26cu.yd

Job Name: 26-1333 - Mitchell Hill Road Project Job Location: Louisville, KY 40118 Contractor: Hall Contracting of Kentucky Inc	Plant: 100 6/16/2026 1:22:03 PM	Tech: J. Horsley PC: J. Jarvis	

Structure ID: WALL P2-P3

P1 CUSTOM WALL **WALL PANEL 6" THICK F/F**

P3) 77" x 6" - WALL PANEL 6" THICK F/F - 2.00' HT x 6.42' LONG	932 lb
P2) 77" x 6" - WALL PANEL 6" THICK F/F - 3.00' HT x 6.42' LONG	1398 lb
P1) 77" x 6" - WALL PANEL 6" THICK F/F - 3.00' HT x 6.42' LONG	1398 lb
1) Hole - 2	0 lb
Structure Total:	3727 lb

Structure Notes: .
1. PER ASTM C913 SPECIFICATIONS.
2. CONCRETER = 4,000 PSI AT 28" DAYS.
3. SMOOTH FORM FINISH ON THE FRONT SURFACE.
4. 3/4" CHAMFER ON ALL LONG EDGES.

.
REINFORCING PER ASTM A615 (GRADE 60).
-VERTICAL BARS = #4 BARS AT 12" C/C
-HORIZONTAL BARS = #6 BARS EQUALLY SPACED (10" MAX.)

Rim: 701' Rim to Invert: 3' Slack: 0" Sump: 60" Step Position:

Position	Elev	Angle	Ext. (cw)	Pipe	Pipe OD	Connector	Hole	Horz Size	Up (_)	Offset
Invert 1										
Invert 2										
Invert 3										
Invert 4										
Invert 5										
Invert 6										
Invert 7										
Invert 8										

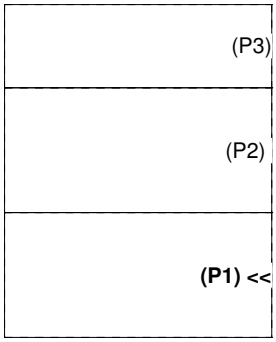

RIGHT-SIDE UP VIEW (int. dimensions)

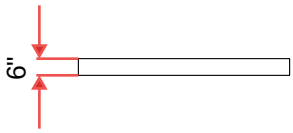

UPSIDE-DOWN VIEW (int. dimenions)

Note:
See attached typical drawing
for reinforcing and lifting details.

INSIDE WALL DIMENSIONS

(P1)

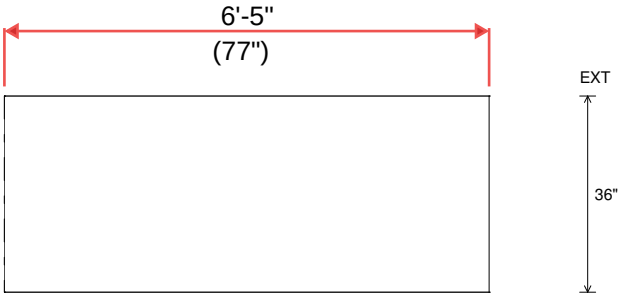

Coating (Int): Coating (Ext):	Seam Up: Flat Seam Dn: Flat	Wall Thickness: 0" Floor Height: 0"	Height (Int): 36" Height (Ext): 36"	Weight (Net): 1398 lb Volume (Net): 0.36cu.yd

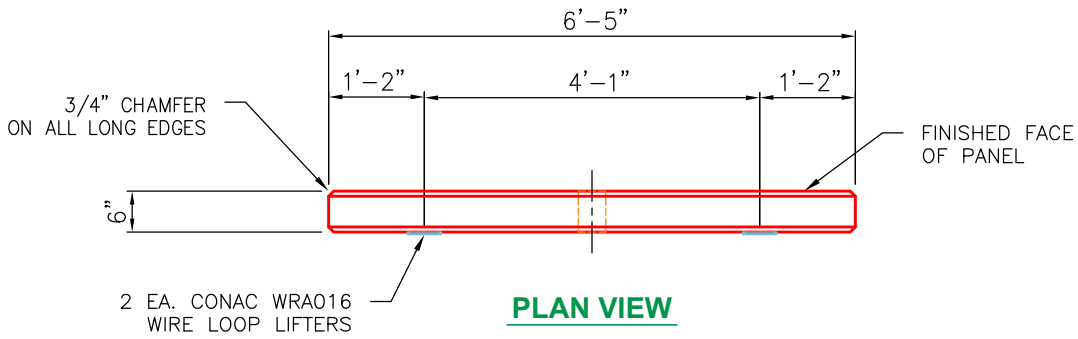

PLAN VIEW

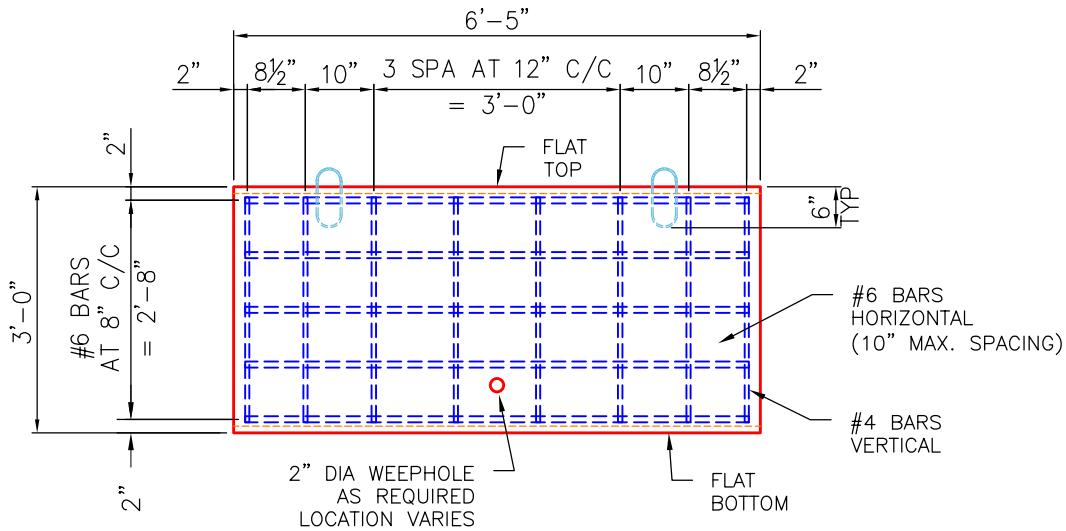

SIDE VIEW

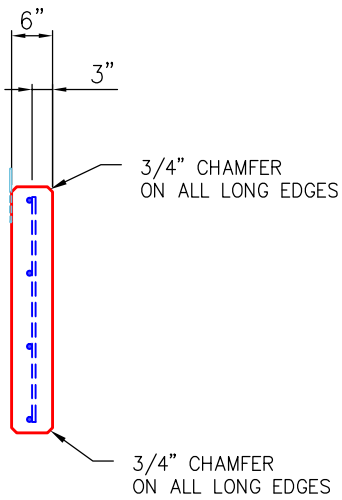

END VIEW

GENERAL NOTES:

1. MANUFACTURED ASTM C913 SPECIFICATIONS.
2. CONCRETE: 4,000 PSI MINIMUM AT 28 DAYS.
3. REINFORCING: AS PER PLAN DESIGN (GRADE 60).
4. CONAC 5CA14 ANCHORS CAST IN FOR HANDLING.
5. WEIGHT = 1,413 LBS
6. 68 REQUIRED.

REVISION INFORMATION	
REV. 0 DATE:	NO REVISIONS TO DATE

SUBMITTAL DESCRIPTION: WALL PANEL 6.50' LG x 6" THK.		
CUSTOMER: HALL CONTRACTING OF KY INC.		
PROJECT: MITCHELL HILL ROAD PROJECT		
STRUCTURE ID.: WALL PANEL 6" THK (78" LG x 36" HT)		
SALES ORDER NO: 26-1333		
CHECK: B. SMITH	DRAWN BY: J. HORSLEY	
DATE: 04/20/26	SCALE: NTS	PG. 1 of 1

THIS DRAWING IS THE PROPERTY OF INFRASTRUCTURE PRECAST, INC. ANY USE OR DUPLICATION OF THIS DRAWING WITHOUT PRIOR AUTHORIZATION IS STRICTLY PROHIBITED.

Job Name: 26-1333 - Mitchell Hill Road Project Job Location: Louisville, KY 40118 Contractor: Hall Contracting of Kentucky Inc	Plant: 100 6/16/2026 1:23:18 PM	Tech: J. Horsley PC: J. Jarvis	

Structure ID: WALL P2-P3

P2 CUSTOM WALL **WALL PANEL 6" THICK F/F**

P3)	77" x 6" - WALL PANEL 6" THICK F/F - 2.00' HT x 6.42' LONG	932 lb
P2)	77" x 6" - WALL PANEL 6" THICK F/F - 3.00' HT x 6.42' LONG	1398 lb
P1)	77" x 6" - WALL PANEL 6" THICK F/F - 3.00' HT x 6.42' LONG	1398 lb
1)	Hole - 2	0 lb
	Structure Total:	3727 lb

Structure Notes: .
1. PER ASTM C913 SPECIFICATIONS.
2. CONCRETER = 4,000 PSI AT 28" DAYS.
3. SMOOTH FORM FINISH ON THE FRONT SURFACE.
4. 3/4" CHAMFER ON ALL LONG EDGES.

.
REINFORCING PER ASTM A615 (GRADE 60).
-VERTICAL BARS = #4 BARS AT 12" C/C
-HORIZONTAL BARS = #6 BARS EQUALLY SPACED (10" MAX.)

Rim: 701' Rim to Invert: 3' Slack: 0" Sump: 60" Step Position:

Position	Elev	Angle	Ext. (cw)	Pipe	Pipe OD	Connector	Hole	Horz Size	Up (_)	Offset
Invert 1	698'	0°	38.5"	2" WEEP HOLE	2"	Hole 2	2"	2"	24"	0"
Invert 2										
Invert 3										
Invert 4										
Invert 5										
Invert 6										
Invert 7										
Invert 8										

RIGHT-SIDE UP VIEW (int. dimensions)

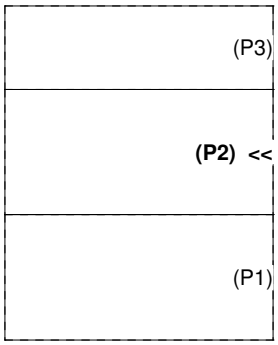

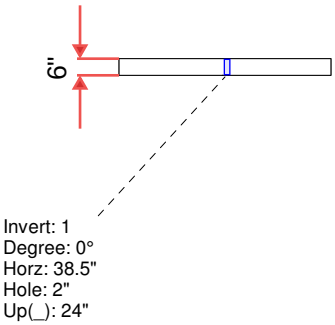

Note:
See attached typical drawing for reinforcing and lifting details.

INSIDE WALL DIMENSIONS

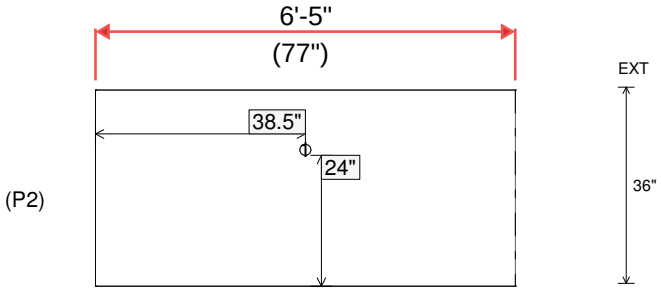

Coating (Int): Coating (Ext):	Seam Up: Flat Seam Dn: Flat	Wall Thickness: 0" Floor Height: 0"	Height (Int): 36" Height (Ext): 36"	Weight (Net): 1398 lb Volume (Net): 0.36cu.yd

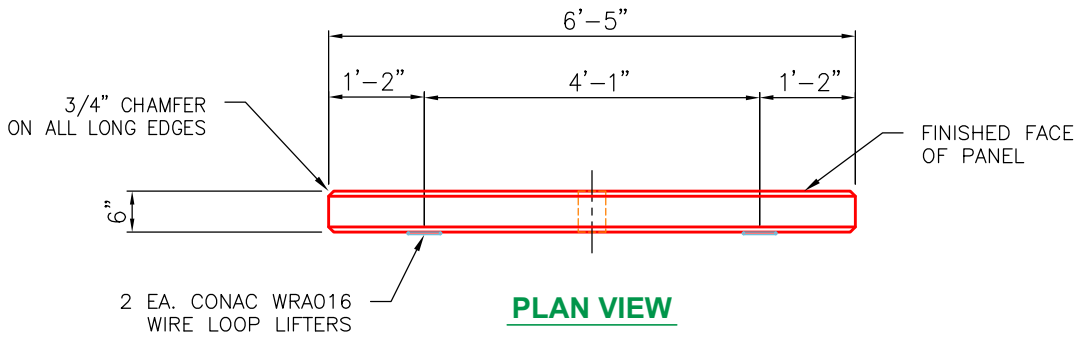

PLAN VIEW

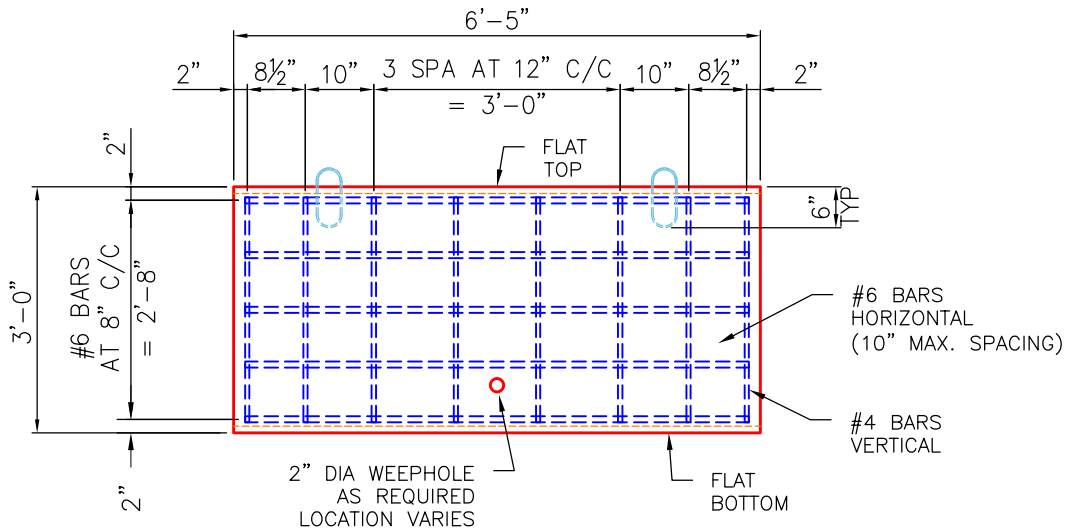

SIDE VIEW

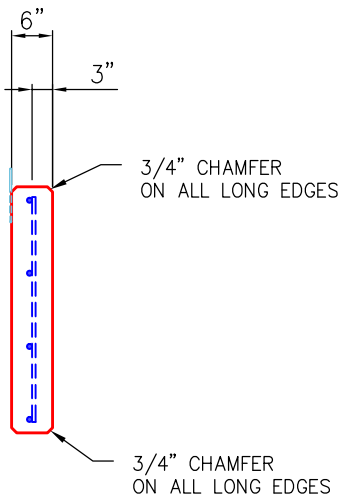

END VIEW

GENERAL NOTES:

1. MANUFACTURED ASTM C913 SPECIFICATIONS.
2. CONCRETE: 4,000 PSI MINIMUM AT 28 DAYS.
3. REINFORCING: AS PER PLAN DESIGN (GRADE 60).
4. CONAC 5CA14 ANCHORS CAST IN FOR HANDLING.
5. WEIGHT = 1,413 LBS
6. 68 REQUIRED.

REVISION INFORMATION	
REV. 0 DATE:	NO REVISIONS TO DATE

SUBMITTAL DESCRIPTION: WALL PANEL 6.50' LG x 6" THK.		
CUSTOMER: HALL CONTRACTING OF KY INC.		
PROJECT: MITCHELL HILL ROAD PROJECT		
STRUCTURE ID.: WALL PANEL 6" THK (78" LG x 36" HT)		
SALES ORDER NO: 26-1333		
CHECK: B. SMITH	DRAWN BY: J. HORSLEY	
DATE: 04/20/26	SCALE: NTS	PG. 1 of 1

THIS DRAWING IS THE PROPERTY OF INFRASTRUCTURE PRECAST, INC. ANY USE OR DUPLICATION OF THIS DRAWING WITHOUT PRIOR AUTHORIZATION IS STRICTLY PROHIBITED.

Job Name: 26-1333 - Mitchell Hill Road Project Job Location: Louisville, KY 40118 Contractor: Hall Contracting of Kentucky Inc	Plant: 100 6/16/2026 1:23:18 PM	Tech: J. Horsley PC: J. Jarvis	

Structure ID: WALL P2-P3

P3 CUSTOM WALL **WALL PANEL 6" THICK F/F**

P3)	77" x 6" - WALL PANEL 6" THICK F/F - 2.00' HT x 6.42' LONG	932 lb
P2)	77" x 6" - WALL PANEL 6" THICK F/F - 3.00' HT x 6.42' LONG	1398 lb
P1)	77" x 6" - WALL PANEL 6" THICK F/F - 3.00' HT x 6.42' LONG	1398 lb
1)	Hole - 2	0 lb
	Structure Total:	3727 lb

Structure Notes: .
1. PER ASTM C913 SPECIFICATIONS.
2. CONCRETER = 4,000 PSI AT 28" DAYS.
3. SMOOTH FORM FINISH ON THE FRONT SURFACE.
4. 3/4" CHAMFER ON ALL LONG EDGES.

.
REINFORCING PER ASTM A615 (GRADE 60).
-VERTICAL BARS = #4 BARS AT 12" C/C
-HORIZONTAL BARS = #6 BARS EQUALLY SPACED (10" MAX.)

Rim: 701' Rim to Invert: 3' Slack: 0" Sump: 60" Step Position:

Position	Elev	Angle	Ext. (cw)	Pipe	Pipe OD	Connector	Hole	Horz Size	Up (_)	Offset
Invert 1										
Invert 2										
Invert 3										
Invert 4										
Invert 5										
Invert 6										
Invert 7										
Invert 8										

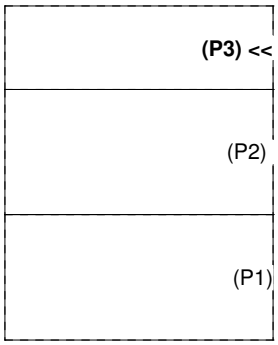

RIGHT-SIDE UP VIEW (int. dimensions)

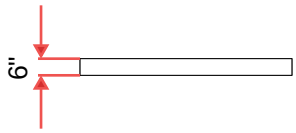

Note:
See attached typical drawing for reinforcing and lifting details.

INSIDE WALL DIMENSIONS

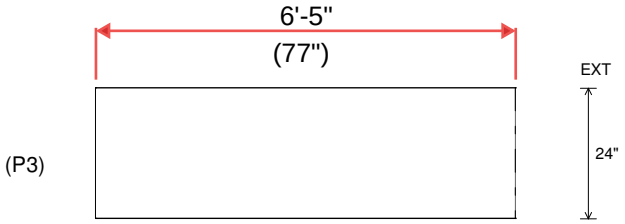

Coating (Int): Coating (Ext):	Seam Up: Flat Seam Dn: Flat	Wall Thickness: 0" Floor Height: 0"	Height (Int): 24" Height (Ext): 24"	Weight (Net): 932 lb Volume (Net): 0.24cu.yd

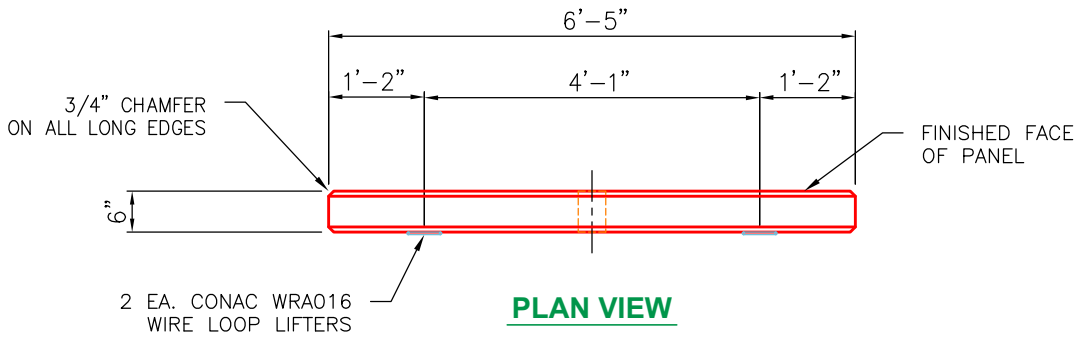

PLAN VIEW

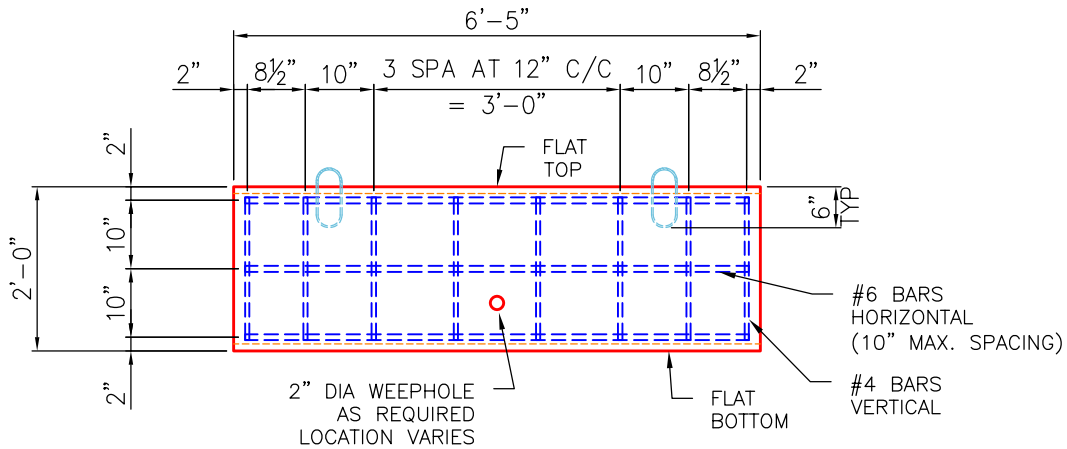

SIDE VIEW

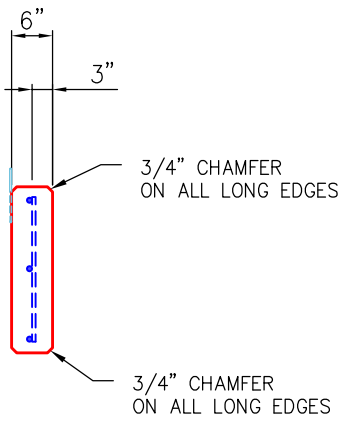

END VIEW

GENERAL NOTES:

1. MANUFACTURED ASTM C913 SPECIFICATIONS.
2. CONCRETE: 4,000 PSI MINIMUM AT 28 DAYS.
3. REINFORCING: AS PER PLAN DESIGN (GRADE 60).
4. CONAC 5CA14 ANCHORS CAST IN FOR HANDLING.
5. WEIGHT = 914 LBS
6. 21 REQUIRED.

REVISION INFORMATION	
REV. 0 DATE:	NO REVISIONS TO DATE

SUBMITTAL DESCRIPTION: WALL PANEL 6.50' LG x 6" THK.		
CUSTOMER: HALL CONTRACTING OF KY INC.		
PROJECT: MITCHELL HILL ROAD PROJECT		
STRUCTURE ID.: WALL PANEL 6" THK (78" LG x 24" HT)		
SALES ORDER NO: 26-1333		
CHECK: B. SMITH	DRAWN BY: J. HORSLEY	
DATE: 04/20/26	SCALE: NTS	PG. 1 of 1

THIS DRAWING IS THE PROPERTY OF INFRASTRUCTURE PRECAST, INC. ANY USE OR DUPLICATION OF THIS DRAWING WITHOUT PRIOR AUTHORIZATION IS STRICTLY PROHIBITED.

Job Name: 25-3062 Portland Bypass Job Location: Portland, TN Contractor: Scotty's Contracting & Stone, LLC	Plant: Beaver Dam 6/1/2026 8:22:47 AM	Tech: J. Coppage PC: C. Goff	

Structure ID: CB-13

P1 BX3232-08BAVF BOX BASE 8inW, 8inF, Variable Ht

P2) 32" x 32" - CASTING HEIGHT - 7"	0 lb
P1) 32" x 32" - BOX BASE 8inW, 8inF, Variable Ht - 45"	5872 lb
1) CASTING - JBS-3123 MODIFIED SET	250 lb
1) 32" x 32" - Conseal CS-102 1.00"	0 lb
2) Hole - 26	0 lb
1) Hole - 6	0 lb

Structure Total:	6122 lb

Structure Notes:
1. PER TDOT D-CB-12LP / ASTM C913 SPEC'S.
2. CONCRETE = 4,000 PSI AT 28 DAYS.
3. NO INVERT CHANNEL.
4. JBS 3123 MOD SINGLE SET BY ICAST
5. REINFORCING PER ASTM A615 (GRADE 60).
- WALLS (As .62) #5 BARS AT 6" C.C.E.W.
- FLOOR (As .62) #5 BARS AT 6" C.C.E.W.

Rim: 809.05' Rim to Invert: 4.19' Slack: 0.78" Sump: 2.5" Step Position:

Position	Elev	Angle	Ext. (cw)	Pipe	Pipe OD	Connector	Hole	Horz Size	Up (_)	Offset
Invert 1	804.86'	0°	27"	18" RCP B WALL	23"	Hole 26	26"	26"	0"	3"
Invert 2	805.15'	180°	21"	18" RCP B WALL	23"	Hole 26	26"	26"	3.48"	-3"
Invert 3	806.55'	180°	37"	4" HDPE (perf pipe)	4.8"	Hole 6	6"	6"	22.38"	13"
Invert 4										
Invert 5										
Invert 6										
Invert 7										
Invert 8										

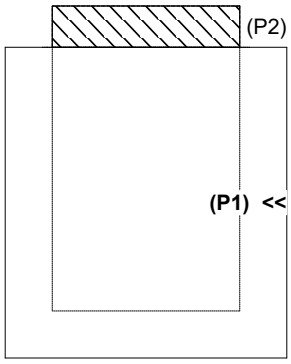

RIGHT-SIDE UP VIEW (int. dimensions)

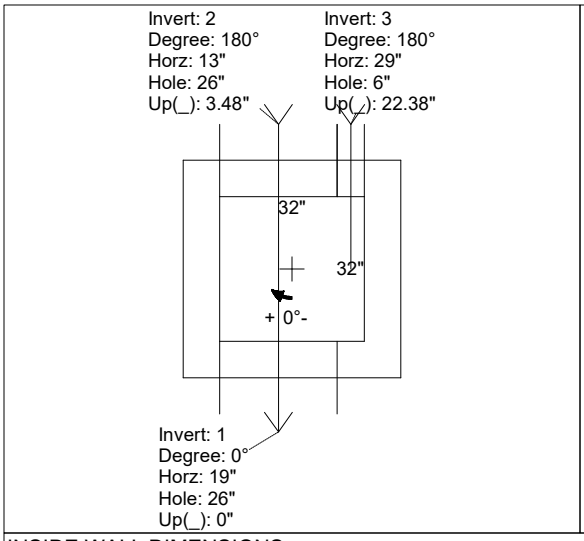

UPSIDE-DOWN VIEW (int. dimenions)

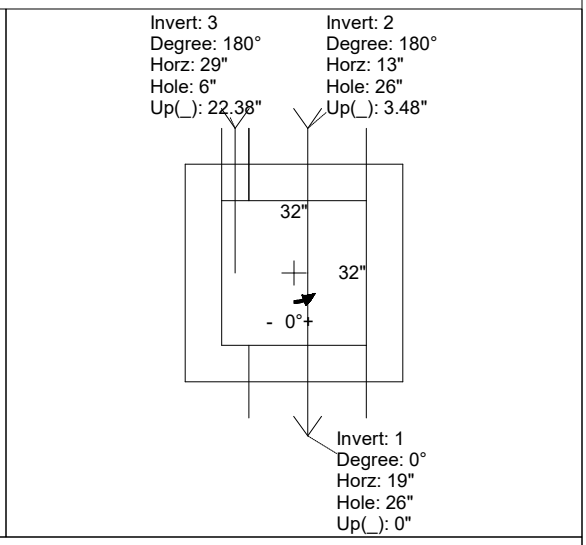

INSIDE WALL DIMENSIONS

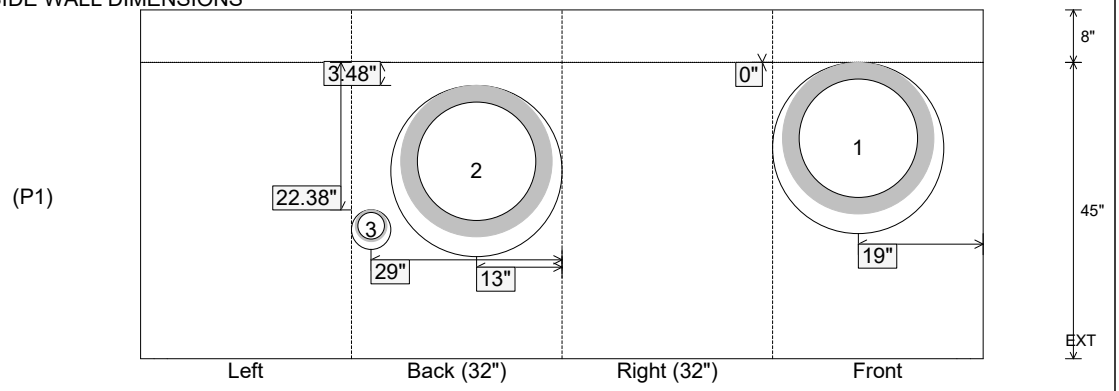

Coating (Int): Coating (Ext):	Seam Up: Flat Seam Dn: n/a	Wall Thickness: 8" Floor Height: 8"	Height (Int): 45" Height (Ext): 53"	Weight (Net): 5872 lb Volume (Net): 1.5cu.yd

Job Name: 25-2952 - KYTC Jefferson Co Call 106 (251315) Job Location: Indiana, KY Contractor: Louisville Paving and Construction	Plant: 100 6/12/2026 3:12:30 PM	Tech: J. Horsley - A PC: J. Jarvis	

Structure ID: 144

P2 BX024024-08LD08-14 CB FLAT TOP 8"W (HOE KY-215 F&G) F/F

P3) 19.5" - CASTING (cast in) - 2.75"	0 lb
P2) 24" x 24" - CB FLAT TOP 8"W (HOE KY-215 F&G) F/F - 8"	943 lb
P1) 24" x 24" - BOX BASE 8inW, 8inF, Variable Ht F/n - 37"	3832 lb
1) This Structure Includes a Cast-in Item - HOE KY-215 Frame (Supplied By Others)	0 lb
1) 24" x 24" - Conseal CS-102 1.00"	0 lb
2) Hole - 20	0 lb
Structure Total:	4775 lb

Structure Notes:

** KYTC STATE PROJECT **

1. PER KYTC DBI TYPE 15 / ASTM C-913 SPECS
2. CONCRETE: 4,000 PSI AT 28 DAYS
3. REINFORCEMENT: #5 BAR @ 6" C.C. E.W. (GRADE 60) - 2" MIN. REBAR CLEARANCE (TYP)
4. HOE KY-215 FRAME & BEEHIVE GRATE SUPPLIED BY OTHERS - FRAME TO BE CAST INTO FLAT LID
5. LIFTERS: 2 EA. 5CA14 CONAC A-ANCHORS FOR PLANT & FIELD HANDLING - INSTALLED AS SHOWN
6. TOP SURFACE TO RECEIVE LIGHT BRUSH FINISH

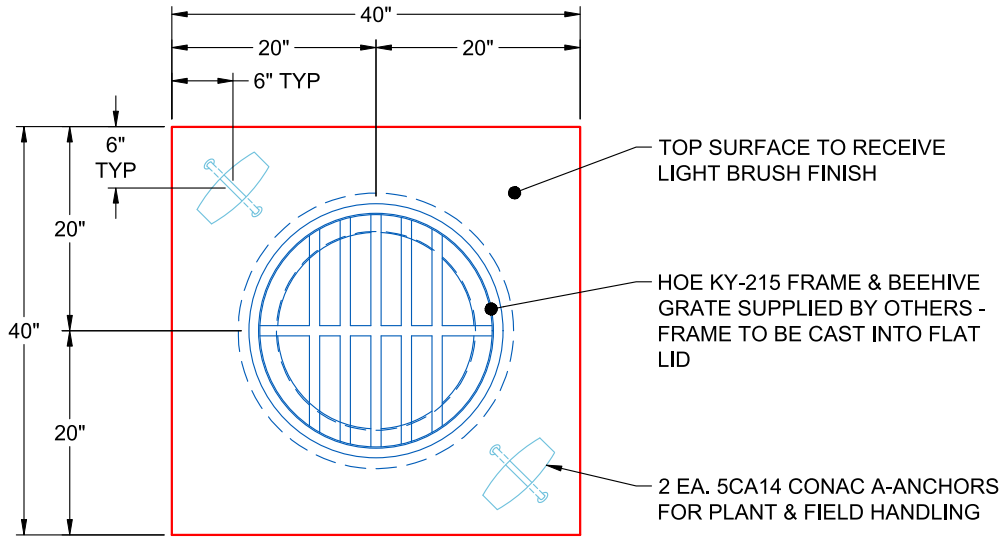

PLAN VIEW
(RIGHT SIDE UP)

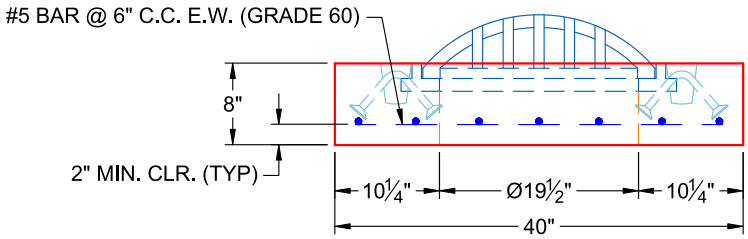

FRONT VIEW
(RIGHT SIDE UP)

Coating (Int): Coating (Ext):	Seam Up: Flat Seam Dn: Flat	Wall Thickness: 8"	Height (Ext): 8"	Weight (Net): 943 lb Volume (Net): 0.24cu.yd

Job Number:

25-2952

Job Name:

KYTC Jefferson Co Call 106 (251315)

Structure:

144

Note:

HOE KY-215 Frame Supplied By Others To Be Cast Into Flat Lid

Job Name: 25-2952 - KYTC Jefferson Co Call 106 (251315) Job Location: Indiana, KY Contractor: Louisville Paving and Construction	Plant: 100 6/12/2026 3:12:19 PM	Tech: J. Horsley - A PC: J. Jarvis	

Structure ID: 24

P2 BX024024-08LD08-14 CB FLAT TOP 8"W (HOE KY-210) F/F

P3) 19.5" - CASTING (cast in) - 2.75"	0 lb
P2) 24" x 24" - CB FLAT TOP 8"W (HOE KY-210) F/F - 8"	943 lb
P1) 24" x 24" - BOX BASE 8inW, 8inF, Variable Ht F/n - 31"	3316 lb
1) This Structure Includes a Cast-in Item - HOE KY-210 Frame (Supplied By Others)	0 lb
1) 24" x 24" - Conseal CS-102 1.00"	0 lb
2) Hole - 20	0 lb
Structure Total:	4259 lb

Structure Notes:

** KYTC STATE PROJECT **

1. PER KYTC DBI TYPE 14 / ASTM C-913 SPECS
2. CONCRETE: 4,000 PSI AT 28 DAYS
3. REINFORCEMENT: #5 BAR @ 6" C.C. E.W. (GRADE 60) - 2" MIN. REBAR CLEARANCE (TYP)
4. HOE KY-210 FRAME & GRATE SUPPLIED BY OTHERS - FRAME TO BE CAST INTO FLAT LID
5. LIFTERS: 2 EA. 5CA14 CONAC A-ANCHORS FOR PLANT & FIELD HANDLING - INSTALLED AS SHOWN
6. TOP SURFACE TO RECEIVE LIGHT BRUSH FINISH

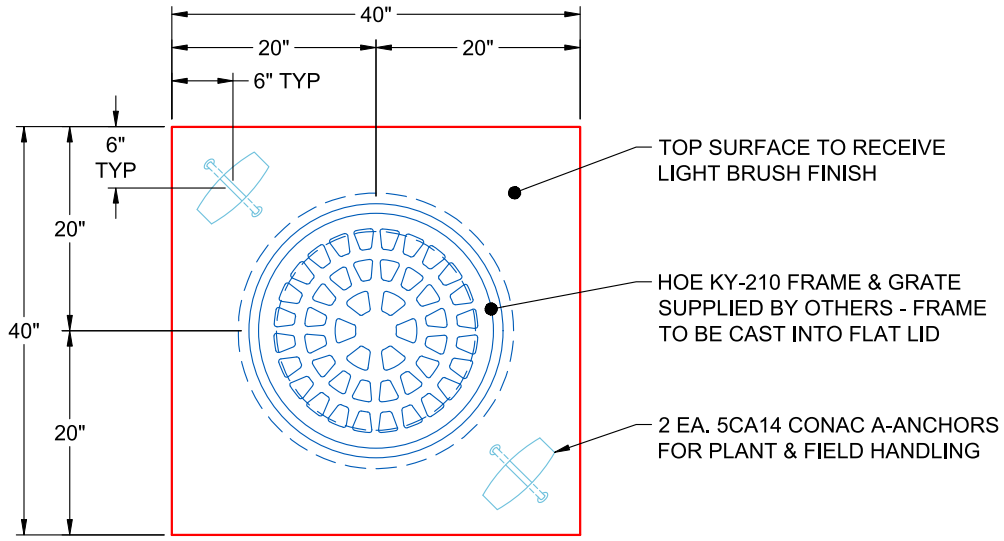

PLAN VIEW
(RIGHT SIDE UP)

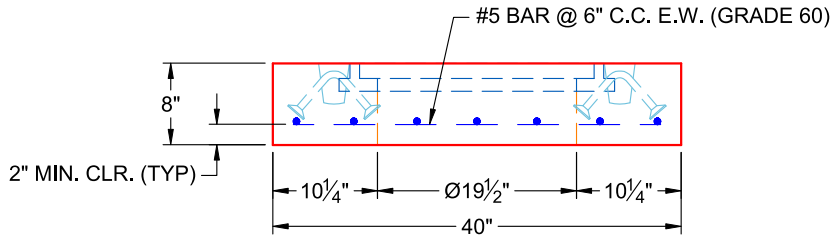

FRONT VIEW
(RIGHT SIDE UP)

Coating (Int): Coating (Ext):	Seam Up: Flat Seam Dn: Flat	Wall Thickness: 8"	Height (Ext): 8"	Weight (Net): 943 lb Volume (Net): 0.24cu.yd

Job Number:

25-2952

Job Name:

KYTC Jefferson Co Call 106 (251315)

Structure:

24

Note:

HOE KY-210 Frame Supplied By Others To Be Cast Into Flat Lid

Job Name: 24-1643B - KYTC McCracken Co. Call 200 (ID 241301) Job Location: Paducah, KY Contractor: Jim Smith Contracting Co, LLC	Plant: 100 5/28/2026 1:31:47 PM	Tech: J. Horsley PC: C. Goff	

Structure ID: St. 45+00 HW (2)

P1 HWCUSTOM 48" x 48" - BOX CULVERT HEADWALL F/F

GENERAL NOTES:

1. DRAWING TO BE USED IN CONJUCTION WITH KYTC STANDARD DRAWINGS RDH-1000-02, RDH-1100-02, RDH-1200-02, & RDH-1300-03
2. REINFORCEMENT PER ATTACHED KYTC STANDARD DRAWINGS RDH-1000-02, RDH-1200-02, & RDH-1300-03 - 2" MIN. REBAR CLEARANCE (TYP)
3. CONCRETE: 5,000 PSI AT 28 DAYS
4. TOTAL WEIGHT: 13,810 LBS
   - FIRST POUR: 8,262 LBS
   - SECOND POUR: 5,548 LBS

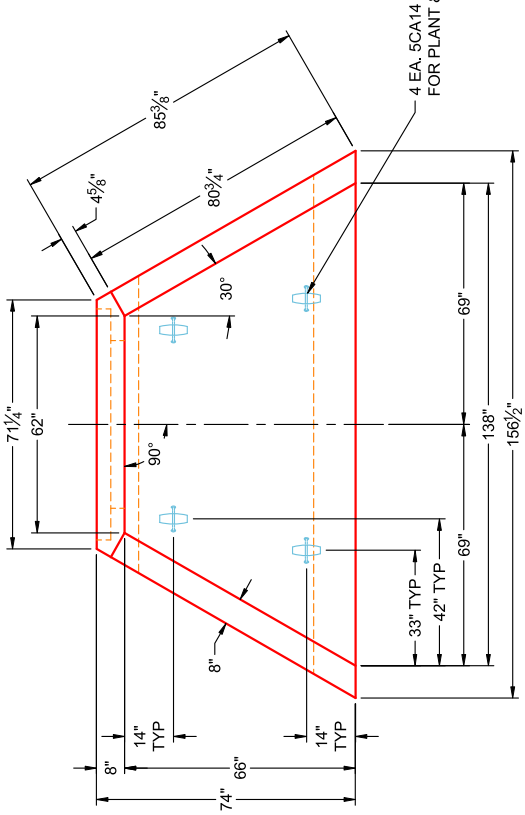

PLAN VIEW
(RIGHT SIDE UP)

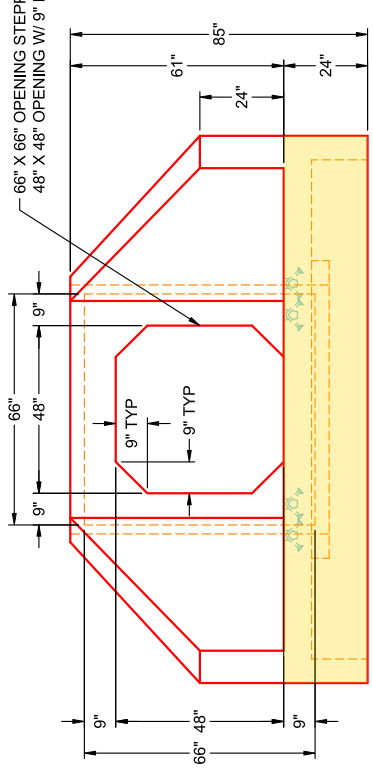

FRONT VIEW
(RIGHT SIDE UP)

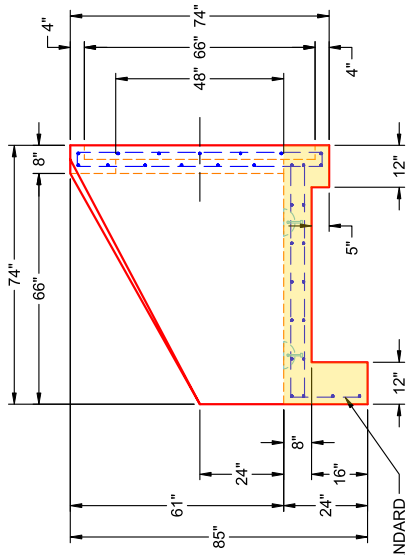

SIDE VIEW
(RIGHT SIDE UP)

SEE ATTACHED KYTC STANDARD DRAWINGS FOR REINFORCEMENT DETAILS

PRODUCT I.D.: HWCUSTOM	DESCRIPTION: 48" X 48" BOX CULVERT HEADWALL - 0° SKEW
PRODUCT VIEW: RIGHT SIDE UP	CUSTOMER: JIM SMITH CONTRACTING
PLANT: BEAVER DAM, KY	PROJECT: KYTC MCCRACKEN CO. CALL 200 (ID 241301)
WEIGHT: 13,810 LBS	STRUCTURE: ST. 45+00 HW (2)
TOP SECTION JOINT: N / A	ORDER NO: 24-1643B
BASE SECTION JOINT: N / A	PE: J.H. ROSS / DRAWING: K. CARDWELL
QC CHECK INITIALS:	DATE: 05/28/26 / SCALE: NTS / PG. 1 OF 1

PRODUCTION WORK ORDER

QUALITY CONTROL CHECKLIST

- ☐ ALL DIMENSIONS CORRECT.
- ☐ LIFTERS INSTALLED
- ☐ OPENING CENTERED.
- ☐ REINFORCING CORRECT.
- ☐ SURFACE QUALITY ACCEPTABLE.
- ☐ EDGES CHAMFERED.
- ☐ ALL PATCHWORK ACCEPTABLE.

THIS DRAWING IS THE PROPERTY OF INFRASTRUCTURE PRECAST, INC. ANY USE OR DUPLICATION OF THIS DRAWING WITHOUT PRIOR AUTHORIZATION IS STRICTLY PROHIBITED.

Job Name: 24-1643B - KYTC McCracken Co. Call 200 (ID 241301) Job Location: Paducah, KY Contractor: Jim Smith Contracting Co, LLC	Plant: 100 5/28/2026 1:31:47 PM	Tech: J. Horsley PC: C. Goff	

Structure ID: St. 45+00 HW (2)

P1 HWCUSTOM 48" x 48" - BOX CULVERT HEADWALL F/F

GENERAL NOTES:

1. DRAWING TO BE USED IN CONJUCTION WITH KYTC STANDARD DRAWINGS RDH-1000-02, RDH-1100-02, RDH-1200-02, & RDH-1300-03
2. REINFORCEMENT PER ATTACHED KYTC STANDARD DRAWINGS RDH-1000-02, RDH-1200-02, & RDH-1300-03 - 2" MIN. REBAR CLEARANCE (TYP)
3. CONCRETE: 5,000 PSI AT 28 DAYS
4. TOTAL WEIGHT: 13,810 LBS
   - FIRST POUR: 8,262 LBS
   - SECOND POUR: 5,548 LBS

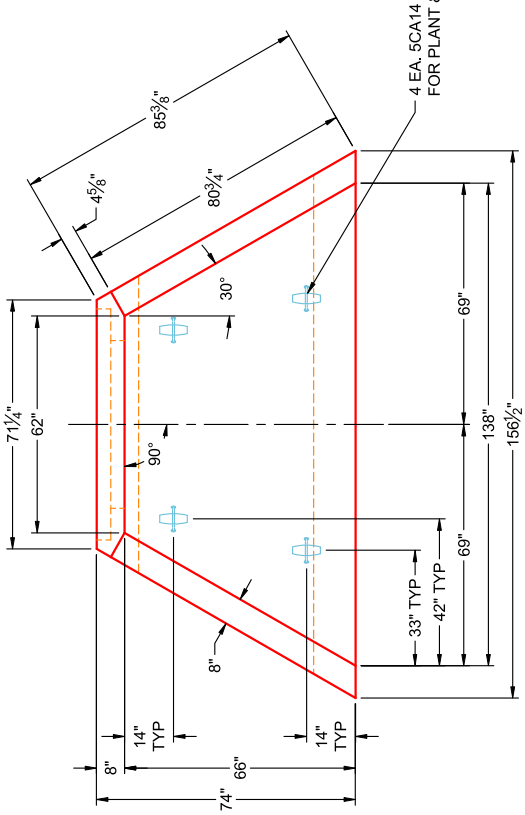

PLAN VIEW
(RIGHT SIDE UP)

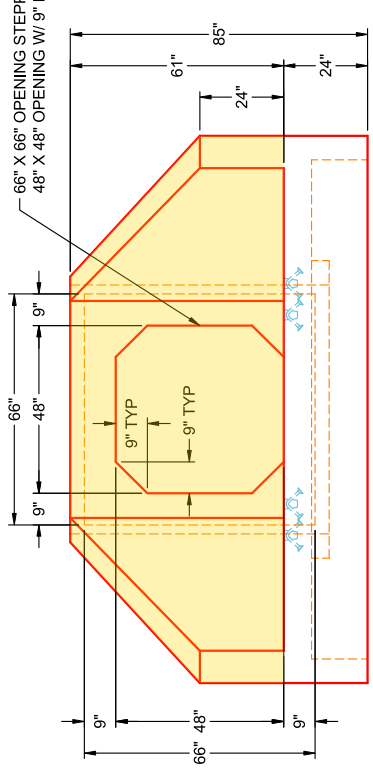

FRONT VIEW
(RIGHT SIDE UP)

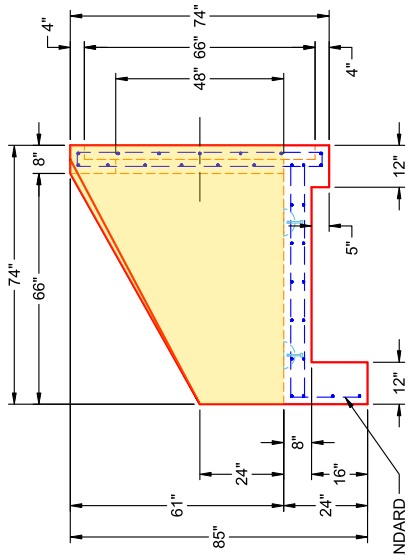

SIDE VIEW
(RIGHT SIDE UP)

SEE ATTACHED KYTC STANDARD DRAWINGS FOR REINFORCEMENT DETAILS

PRODUCT I.D.: HWCUSTOM	DESCRIPTION: 48" X 48" BOX CULVERT HEADWALL - 0° SKEW
PRODUCT VIEW: RIGHT SIDE UP	CUSTOMER: JIM SMITH CONTRACTING
PLANT: BEAVER DAM, KY	PROJECT: KYTC MCCRACKEN CO. CALL 200 (ID 241301)
WEIGHT: 13,810 LBS	STRUCTURE: ST. 45+00 HW (2)
TOP SECTION JOINT: N / A	ORDER NO: 24-1643B
BASE SECTION JOINT: N / A	PE: J.H. ROSS / DRAWING: K. CARDWELL
QC CHECK INITIALS:	DATE: 05/28/26 / SCALE: NTS / PG. 1 OF 1

PRODUCTION WORK ORDER

QUALITY CONTROL CHECKLIST

- ☐ ALL DIMENSIONS CORRECT.
- ☐ LIFTERS INSTALLED
- ☐ OPENING CENTERED.
- ☐ REINFORCING CORRECT.
- ☐ SURFACE QUALITY ACCEPTABLE.
- ☐ EDGES CHAMFERED.
- ☐ ALL PATCHWORK ACCEPTABLE.

THIS DRAWING IS THE PROPERTY OF INFRASTRUCTURE PRECAST, INC. ANY USE OR DUPLICATION OF THIS DRAWING WITHOUT PRIOR AUTHORIZATION IS STRICTLY PROHIBITED.

DRAWING SCALE:
3/4" : 1'

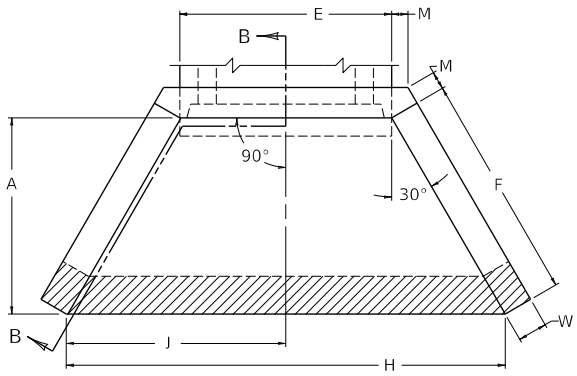

PLAN VIEW

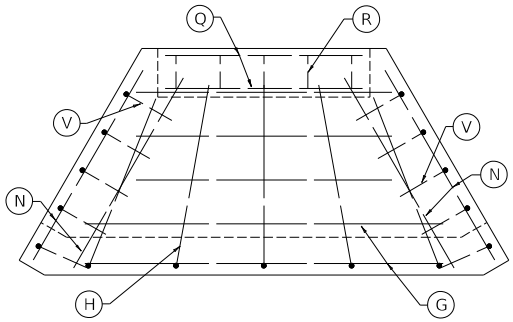

SECTION A-A

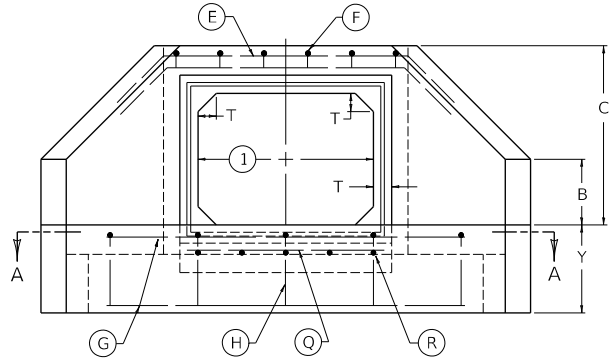

FRONT ELEVATION

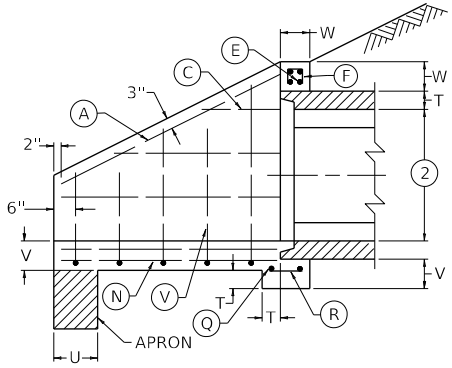

SECTION B-B

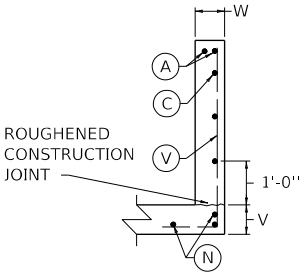

WING SECTION

NOTES

1. SPAN OF BOX CULVERT
2. RISE OF BOX CULVERT
3. FOR DIMENSIONS, QUANTITIES, AND BILL OF REINFORCEMENT SEE CUR. STD. DWGS. RDH-1100, RDH-1200 AND RDH-1300 SERIES.
4. DIMENSIONS FROM FACE OF CONCRETE TO STEEL SHALL BE 2" CLEAR DISTANCE.
5. ENCIRCLED LETTERS, ◯, INDICATE STEEL BAR LOCATIONS.
6. BARS C, G, AND V ARE SPACED 1'-0" O.C. ALL OTHER BARS SHALL BE EVENLY SPACED.
7. BARS V ARE PLACED IN ORDER OF INCREASING LENGTHS, BEGINNING AT THE END OF EACH WING.
8. BARS C ARE PLACED IN ORDER OF INCREASING LENGTHS, BEGINNING AT THE TOP OF EACH WING.
9. HEADWALLS LOCATED AT SHOULDER EDGE SHALL BE PARALLEL TO CENTERLINE OF ROAD.
10. ▨ LIMITS OF APRON.
11. PAVING SHALL BE REQUIRED AND SHALL BE SLOPED IN DIRECTION OF FLOW EQUAL TO SLOPE OF BOX. FRONT FACE OF HEADWALL AND ENDS OF WINGS SHALL REMAIN VERTICAL.

(LAYOUT AND STEEL PATTERN)

KENTUCKY
DEPARTMENT OF HIGHWAYS

PRECAST BOX CULVERT
HEADWALLS – 0° SKEW
(BOX RISE LESS THAN 6'-0")

STANDARD DRAWING NO. RDH-1000-02

SUBMITTED _____ DIRECTOR DIVISION OF DESIGN _____ DATE

APPROVED _____ STATE HIGHWAY ENGINEER _____ DATE

DIMENSION	PRECAST BOX CULVERT												DIMENSION
	3'x2'	3'x3'	4'x2'	4'x3'	4'x4'	5'x3'	5'x4'	5'x5'	6'x3'	6'x4'	6'x5'	6'x6'	
A	3'-4''	4'-4''	3'-6''	4'-6''	5'-6''	4'-8''	5'-8''	6'-8''	4'-10''	5'-10''	6'-10''	8'-0''	A
B	1'-0''	1'-6''	1'-0''	1'-6''	2'-0''	1'-6''	2'-0''	2'-6''	1'-6''	2'-0''	2'-6''	3'-0''	B
C	3'-0''	4'-0''	3'-1''	4'-1''	5'-1''	4'-2''	5'-2''	6'-2''	4'-3''	5'-3''	6'-3''	7'-5''	C
E	3'-8''		4'-10''			6'-0''			7'-2''				E
F	3'-10''	5'-0''	4'-0''	5'-2''	6'-4''	5'-5''	6'-7''	7'-8''	5'-7''	6'-9''	7'-11''	9'-3''	F
H	7'-6''	8'-8''	8'-10''	10'-0''	11'-2''	11'-5''	12'-7''	13'-8''	12'-9''	13'-11''	15'-1''	16'-5''	H
J	3'-9''	4'-4''	4'-5''	5'-0''	5'-7''	5'-8''	6'-3''	6'-10''	6'-4''	6'-11''	7'-6''	8'-2''	J
M	0'-5''											0'-6''	M
T	0'-4''		0'-5''			0'-6''			0'-7''				T
U	1'-0''												U
V	0'-8''											1'-0''	V
W	0'-8''											0'-10''	W
X	----											2'-0''	X
Y	2'-0''											2'-6''	Y
Z	----											1'-3''	Z

KENTUCKY
DEPARTMENT OF HIGHWAYS

DIMENSIONS
3'x2' – 6'x6' HEADWALLS
PRECAST BOX CULVERT
0° SKEW

STANDARD DRAWING NO. RDH-1100-02

SUBMITTED _____ DIRECTOR DIVISION OF DESIGN _____ DATE

APPROVED _____ STATE HIGHWAY ENGINEER _____ DATE

BOX SIZE ①	CONCRETE 2 HEADWALLS					REINFORCEMENT 2 HEADWALLS	
	②	③	④	⑤	⑥	⑦	⑧
3 X 2	3.17	0.82	—	—	—	271	—
3 X 3	4.39	0.94	—	—	—	365	—
4 X 2	3.74	0.96	—	—	—	311	—
4 X 3	5.06	1.07	—	—	—	389	—
4 X 4	6.60	1.18	—	—	—	497	—
5 X 3	5.76	1.20	—	—	—	430	—
5 X 4	7.39	1.32	—	—	—	576	—
5 X 5	9.24	1.43	—	—	—	681	—
6 X 3	6.51	1.34	—	—	—	483	—
6 X 4	8.22	1.45	—	—	—	603	—
6 X 5	10.16	1.57	—	—	—	738	—
6 X 6	19.81	2.39	2.24	3.26	18.43	1619	273
7 X 4	9.10	1.59	—	—	—	652	—
7 X 5	11.13	1.70	—	—	—	796	—
7 X 6	21.08	2.54	2.56	3.43	19.40	1678	292
7 X 7	24.13	2.67	3.00	3.69	22.15	2092	353
8 X 4	9.59	1.68	—	—	—	693	—
8 X 5	11.67	1.80	—	—	—	805	—
8 X 6	21.80	2.65	2.78	3.54	19.90	1736	325
8 X 7	24.88	2.78	3.25	3.80	22.64	2117	350
8 X 8	31.42	4.03	3.34	5.47	29.52	2749	427

BOX SIZE ①	CONCRETE 2 HEADWALLS					REINFORCEMENT 2 HEADWALLS	
	②	③	④	⑤	⑥	⑦	⑧
9 X 5	12.70	1.93	—	—	—	877	—
9 X 6	23.13	2.81	3.12	3.71	20.91	1791	327
9 X 7	26.26	2.93	3.62	3.97	23.68	2204	397
9 X 8	33.01	4.23	3.73	5.70	30.75	2846	479
9 X 9	36.81	4.40	4.25	6.04	34.20	3431	509
10 X 5	13.79	2.07	—	—	—	971	—
10 X 6	24.50	2.96	3.47	3.89	21.96	1972	376
10 X 7	27.69	3.09	4.00	4.14	24.75	2419	444
10 X 8	34.64	4.43	4.12	5.93	32.01	3081	482
10 X 9	38.50	4.60	4.68	6.27	35.49	3539	565
10 X 10	53.89	7.29	5.40	9.95	51.16	4748	674
11 X 4	12.60	2.09	—	—	—	870	—
11 X 6	25.92	3.11	3.83	4.06	23.04	2049	413
11 X 8	36.32	4.63	4.53	6.16	33.32	3180	534
11 X 10	56.04	7.59	5.89	10.29	52.85	4801	677
11 X 11	69.84	7.77	6.93	10.66	65.81	5688	778
12 X 4	13.72	2.22	—	—	—	903	—
12 X 6	27.39	3.26	4.19	4.23	24.17	2134	457
12 X 8	38.05	4.84	4.94	6.39	34.66	3424	587
12 X 10	60.16	7.88	6.38	10.62	56.52	5075	740
12 X 12	92.85	8.01	8.83	10.98	86.98	6916	929

① PRECAST CONCRETE BOX CULVERT SECTIONS EQUALS THE INTERIOR SPAN (S) BY THE INTERIOR RISE (R) IN FEET.
② CU. YDS. OF CONCRETE IN TWO HEADWALLS WITH PAVING.
③ CU. YDS. OF CONCRETE IN TWO APRONS (HEADWALLS WITH PAVING).
④ CU. YDS. OF CONCRETE IN TWO PAVED AREAS OF THE HEADWALLS.
⑤ CU. YDS. OF CONCRETE IN TWO APRONS (HEADWALLS WITHOUT PAVING).
⑥ CU. YDS. OF CONCRETE IN TWO HEADWALLS WITHOUT PAVING.
⑦ POUNDS OF REINFORCING STEEL IN TWO HEADWALLS WITH PAVING.
⑧ POUNDS OF REINFORCING STEEL TO DEDUCT WHEN PAVING FOR TWO HEADWALLS IS ELIMINATED.

KENTUCKY
DEPARTMENT OF HIGHWAYS

QUANTITIES
3' x 2' – 12' x 12' H-WALLS
PRECAST BOX CULVERTS
0° SKEW

STANDARD DRAWING NO. RDH-1200-02

SUBMITTED _____ DIRECTOR DIVISION OF DESIGN _____ DATE

APPROVED _____ STATE HIGHWAY ENGINEER _____ DATE

3' X 2'

MARK	SIZE	NO (1)	LGTH FT	LGTH IN	K FT	K IN
A	5	4	4	2		
C_1	4	2	1	6		
C_2	4	2	3	6		
E_1	5	2	6	11	3	11
E_2	5	2	7	3	4	3
F	4	5	0	11	0	4
G_1	4	2	4	0		
G_2	4	3	6	0		
H	4	4	4	8	3	0
N	4	6	3	8		
Q	4	2	3	4		
R	4	4	0	9		
V_1	5	4	2	10	1	7
V_2	5	4	3	10	2	7

3' X 3'

MARK	SIZE	NO (1)	LGTH FT	LGTH IN	K FT	K IN
A	5	4	5	5		
C_1	4	2	1	7		
C_2	4	2	3	7		
C_3	4	2	4	10		
E_1	5	2	6	11	3	11
E_2	5	2	7	3	4	3
F	4	5	0	11	0	4
G_1	4	2	4	7		
G_2	4	2	6	11		
G_3	4	2	8	0		
H	4	5	5	8	4	0
N	4	6	4	10		
Q	4	2	3	4		
R	4	4	0	8		
V_1	5	4	3	4	2	1
V_2	5	4	4	4	3	1
V_3	5	2	5	4	4	1

4' X 2'

MARK	SIZE	NO (1)	LGTH FT	LGTH IN	K FT	K IN
A	5	4	4	4		
C_1	4	2	1	9		
C_2	4	2	3	8		
E_1	5	2	8	1	5	1
E_2	5	2	8	5	5	5
F	4	6	0	11	0	4
G_1	4	2	5	9		
G_2	4	3	8	0		
H	4	5	5	0	3	4

4' X 2' (CONTINUED)

MARK	SIZE	NO (1)	LGTH FT	LGTH IN	K FT	K IN
N	4	6	3	10		
Q	4	2	4	6		
R	4	5	0	9		
V_1	5	4	2	10	1	7
V_2	5	4	3	10	2	7

4' X 3'

MARK	SIZE	NO (1)	LGTH FT	LGTH IN	K FT	K IN
A	5	4	5	7		
C_1	4	2	1	10		
C_2	4	2	3	10		
C_3	4	2	5	0		
E_1	5	2	8	1	5	1
E_2	5	2	8	5	5	5
F	4	6	0	11	0	4
G_1	4	3	5	10		
G_2	4	3	8	2		
H	4	5	5	10	4	2
N	4	6	5	0		
Q	4	2	4	6		
R	4	5	0	9		
V_1	5	4	3	4	2	1
V_2	5	4	4	4	3	1
V_3	5	2	5	3	4	0

4' X 4'

MARK	SIZE	NO (1)	LGTH FT	LGTH IN	K FT	K IN
A	5	4	6	10		
C_1	4	2	1	10		
C_2	4	2	3	11		
C_3	4	2	6	0		
C_4	4	2	6	2		
E_1	5	2	8	1	5	1
E_2	5	2	8	5	5	5
F	4	6	0	11	0	4
G_1	4	2	5	5		
G_2	4	2	7	9		
G_3	4	3	10	0		
H	4	6	6	10	5	2
N	4	6	6	2		
Q	4	2	4	6		
R	4	5	0	9		
V_1	5	4	3	10	2	7
V_2	5	4	4	9	3	6
V_3	5	4	5	9	4	6

5' X 3'

MARK	SIZE	NO (1)	LGTH FT	LGTH IN	K FT	K IN
A	5	4	5	10		
C_1	4	2	1	11		
C_2	4	2	4	0		
C_3	4	2	5	3		
E_1	5	2	9	2	6	2
E_2	5	2	9	7	6	7
F	4	7	0	11	0	4
G_1	4	2	6	7		
G_2	4	2	8	11		
G_3	4	2	10	0		
H	4	6	6	0	4	4
N	4	6	5	2		
Q	4	2	5	8		
R	4	6	0	10		
V_1	5	4	3	4	2	1
V_2	5	4	4	3	3	0
V_3	5	2	5	3	4	0

5' X 4'

MARK	SIZE	NO (1)	LGTH FT	LGTH IN	K FT	K IN
A	5	4	7	1		
C_1	4	2	2	1		
C_2	4	2	4	1		
C_3	4	2	6	2		
C_4	4	2	6	4		
E_1	5	2	9	2	6	2
E_2	5	2	9	7	6	7
F	4	7	0	11	0	4
G_1	4	2	7	5		
G_2	4	2	9	9		
G_3	4	3	12	0		
H	4	7	7	0	5	4
N	4	6	6	4		
Q	4	2	5	8		
R	4	6	0	10		
V_1	5	4	3	10	2	7
V_2	5	4	4	9	3	6
V_3	5	4	5	9	4	6
V_4	5	2	6	9	5	6

5' X 5'

MARK	SIZE	NO (1)	LGTH FT	LGTH IN	K FT	K IN
A	5	4	8	4		
C_1	4	2	2	1		
C_2	4	2	4	2		
C_3	4	2	6	4		
C_4	4	4	7	6		
E_1	5	2	9	2	6	2
E_2	5	2	9	7	6	7
F	4	7	0	11	0	4
G_1	4	3	7	5		
G_2	4	2	9	9		
G_3	4	3	12	0		
H	4	7	8	0	6	4
N	4	6	7	6		
Q	4	2	5	8		
R	4	6	0	10		
V_1	5	4	4	3	3	0
V_2	5	4	5	3	4	0
V_3	5	4	6	2	4	11
V_4	5	4	7	2	5	11

6' X 3'

MARK	SIZE	NO (1)	LGTH FT	LGTH IN	K FT	K IN
A	5	4	6	1		
C_1	4	2	2	2		
C_2	4	2	4	3		
C_3	4	2	5	5		
E_1	5	2	10	5	7	5
E_2	5	2	10	9	7	9
F	4	8	0	11	0	4
G_1	4	1	8	0		
G_2	4	2	9	10		
G_3	4	3	12	0		
H	4	7	6	2	4	6
N	4	6	5	5		
Q	4	2	6	10		
R	4	8	0	11		
V_1	5	4	4	4	3	1
V_2	5	4	5	3	4	0
V_3	5	4	6	2	4	11
V_4	5	4	7	2	5	11

6' X 4'

MARK	SIZE	NO (1)	LGTH FT	LGTH IN	K FT	K IN
A	5	4	7	4		
C_1	4	2	2	3		
C_2	4	2	4	3		
C_3	4	2	6	4		
C_4	4	2	6	7		
E_1	5	2	10	5	7	5
E_2	5	2	10	9	7	9
F	4	8	0	11	0	4
G_1	4	2	8	0		
G_2	4	2	10	0		
G_3	4	3	12	0		
H	4	7	7	2	5	6
N	4	6	6	7		
Q	4	2	6	10		
R	4	8	0	11		
V_1	5	4	3	10	2	7
V_2	5	4	4	9	3	6
V_3	5	4	5	9	4	6
V_4	5	2	6	8	5	5

6' X 5'

MARK	SIZE	NO (1)	LGTH FT	LGTH IN	K FT	K IN
A	5	4	8	7		
C_1	4	2	2	3		
C_2	4	2	4	4		
C_3	4	2	6	5		
C_4	4	4	7	9		
E_1	5	2	10	5	7	5
E_2	5	2	10	9	7	9
F	4	8	0	11	0	4
G_1	4	1	8	3		
G_2	4	2	9	5		
G_3	4	2	11	9		
G_4	4	3	14	0		
H	4	8	8	2	6	6
N	4	6	7	8		
Q	4	2	6	10		
R	4	8	0	11		
V_1	5	4	4	4	3	1
V_2	5	4	5	3	4	0
V_3	5	4	6	2	4	11
V_4	5	4	7	2	5	11

6' X 6'

MARK	SIZE	NO (1)	LGTH FT	LGTH IN	K FT	K IN
A	5	4	10	1		
B_1	5	8	3	1		
B_2	5	8	4	0		
B_3	5	8	5	0		
B_4	5	8	5	11		
B_5	5	4	6	10		
C_1	4	4	2	7		
C_2	4	4	4	8		
C_3	4	4	6	9		
C_4	4	4	8	10		
C_5	4	8	9	1		
E_1	5	2	12	5	7	5
E_2	5	2	12	11	7	11
F	4	8	1	5	0	6
G_1	4	2	9	1		
G_2	4	2	11	4		
G_3	4	2	13	8		
G_4	4	3	16	0		
H	4	9	9	10	7	8
M	4	18	3	9		
N	4	14	9	0		
P	5	18	5	3	3	6
Q	5	4	6	10		
R	5	8	3	1		

7' X 4'

MARK	SIZE	NO (1)	LGTH FT	LGTH IN	K FT	K IN
A	5	4	7	6		
C_1	4	2	2	5		
C_2	4	2	4	6		
C_3	4	2	6	7		
C_4	4	2	6	9		
E_1	5	2	11	6	8	7
E_2	5	2	11	11	8	11
F	4	9	0	11	0	4
G_1	4	2	9	9		
G_2	4	2	11	10		
G_3	4	3	14	0		
H	4	8	7	4	5	8
N	4	6	6	9		
Q	4	2	8	0		
R	4	9	1	0		
V_1	5	4	3	10	2	7
V_2	5	4	4	9	3	6
V_3	5	4	5	9	4	6
V_4	5	2	6	8	5	5

NOTES

1. NUMBER OF BARS IN ONE HEADWALL.
2. DIMENSIONS ARE 0. TO 0. OF BARS.
3. ALL BARS ARE STRAIGHT EXCEPT THOSE SHOWN BELOW.
4. R = BOX OR PIPE RISE
5. W = WING WALL WIDTH

BENT BAR SHAPES

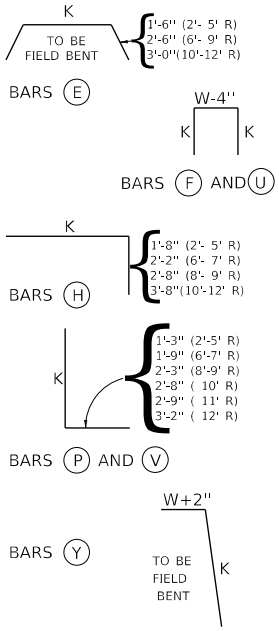

KENTUCKY DEPARTMENT OF HIGHWAYS

BILL OF REINFORCEMENT
3' X 2' - 7' X 4' HEADWALLS
PRECAST BOX CULVERTS
0° SKEW

STANDARD DRAWING NO. RDH-1300-03

SUBMITTED _____ DIRECTOR DIVISION OF DESIGN _____ DATE

APPROVED _____ STATE HIGHWAY ENGINEER _____ DATE