| | | | |
|---|---|---|---|
| Job Name: 25-3187 - Carter Caves WTP Upgrades Ph 3<br>Job Location: Olive Hill, KY<br>Contractor: Walker Principles | Plant: 100<br>7/6/2026 11:03:32 AM | Tech: J. Horsley<br>PC: E. Bradley | |

## Structure ID: SCUM WW

## P2 MH060RS72S MH RISER SPECIAL

| | |
|---|---|
| P4) 60" - MH FLAT TOP w/30"x30" Hatch - 13" | 2455 lb |
| P3) 60" - MH RISER SPECIAL - 18" | 1879 lb |
| P2) 60" - MH RISER SPECIAL - 72" | 7442 lb |
| P1) 60" - MH BASE w/FLANGE (08F/07EF) - 43" | 8388 lb |
| 3) JOINT WRAP - 12" WD x 096" MAC WRAP | 0 lb |
| 1) HATCH (Alum.) - HALLIDAY W1S 30"x30" | 62 lb |
| 1) SECONDARY POUR - EXT. FLANGE | 0 lb |
| 3) 60" - Conseal CS-231 1.00" (Double) | 0 lb |
| 1) Z-Lok - C107-3 | 1 lb |
| 2) A-Lok - 0225 | 2 lb |
| 1) A-Lok - 0150 | 1 lb |
| Structure Total: | 20230 lb |

Structure Notes: .
1. PER ASTM C478 SPECIFICATIONS.
2. CONCRETE = 4,500 PSI AT 28 DAYS.
3. NO STEPS / NO INVERT CHANNEL.
4. HATCH BY ICAST (HALLIDAY W1S 30"X30")
.
REINFORCING PER ASTM A615 (GRADE 60).
- TOP SLAB (As .62) #5 BARS AT 6" C.C.E.W.
- RISER/WALLS (As .18)
- FLOOR (As .47) #5 BARS AT 8" C.C.E.W.

Rim: 890.5' Rim to Invert: 7.59' Slack: 0.04" Sump: 54.96" Step Position:

| Position | Elev | Angle | Ext. (cw) | Pipe | Pipe OD | Connector | Hole | Horz Size | Up (_) | Offset |
|---|---|---|---|---|---|---|---|---|---|---|
| Invert 1 | 885.83' | 90° | 59.019" | 3" DI | 3.5" | Z-Lok C107-3 | 6.5" | 6.535" | 40.5" | 2.469" |
| Invert 2 | 885.5' | 0° | 0" | 6" DI | 6.875" | A-Lok 0225 | 7.63" | 7.651" | 37.475" | 0" |
| Invert 3 | 883.5' | 315° | 197.92" | 6" DI | 6.875" | A-Lok 0225 | 7.63" | 7.651" | 13.475" | 0" |
| Invert 4 | 882.91' | 90° | 56.549" | 4" DI | 4.75" | A-Lok 0150 | 5.25" | 5.257" | 6.585" | 0" |
| Invert 5 | | | | | | | | | | |
| Invert 6 | | | | | | | | | | |
| Invert 7 | | | | | | | | | | |
| Invert 8 | | | | | | | | | | |

RIGHT-SIDE UP VIEW (int. dimensions)

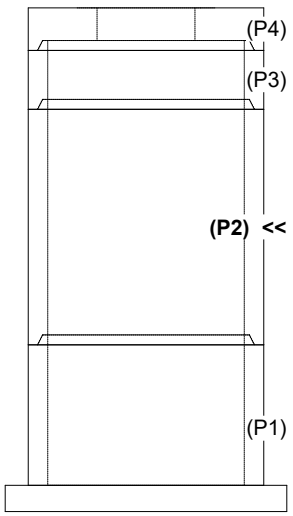


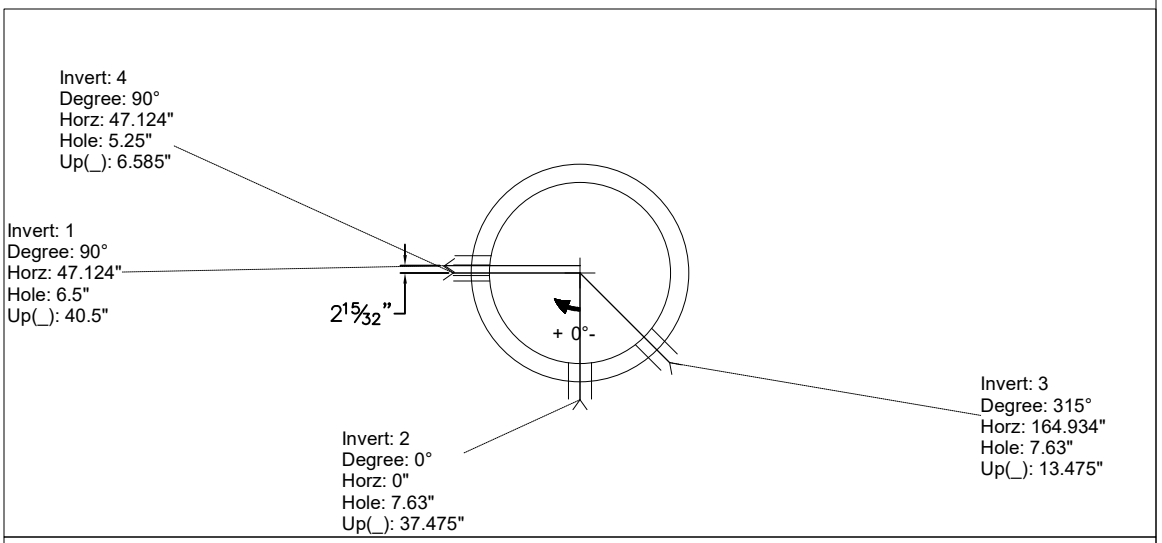


INSIDE WALL DIMENSIONS

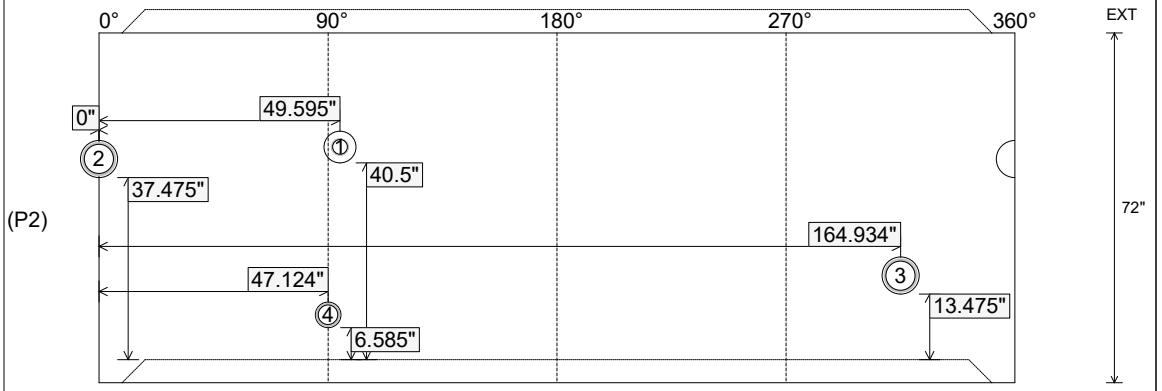


| | | | | |
|---|---|---|---|---|
| Coating (Int):<br>Coating (Ext): | Seam Up: Tongue<br>Seam Dn: Groove | Wall Thickness: 6"<br>Floor Height: 0" | Height (Int): 72"<br>Height (Ext): 72" | Weight (Net): 7442 lb<br>Volume (Net): 1.9cu.yd |