Job Name: 26-2146 - Fairview Apartments Job Location: Russell Springs, KY 42642 Contractor: Dirt Design Construction LLC	Plant: 100 8/3/2026 11:45:40 AM	Tech: J. Horsley PC: M. Sullivan	

Structure ID: 27 ST-DMH

P1 MH048BAVF **MH BASE Custom Ht**

P3) 24" - CASTING HEIGHT - 7"	0 lb
P2) 48" - MH FLAT TOP w/ 24" ECC Hole - 12"	1561 lb
P1) 48" - MH BASE Custom Ht - 29"	3086 lb
1) 48" - Conseal CS-102 1.00"	0 lb
2) Hole - 20	0 lb
2) MH Step ML-10-TDS-NCR - 10"	0 lb
Structure Total:	4647 lb

Structure Notes: .
1. PER ASTM C478 SPECIFICATIONS.
2. CONCRETE = 4,000 PSI AT 28 DAYS.
3. CASTING BY OTHERS (HOE MC-420 F/C)
.
REINFORCING PER ASTM A615 (GRADE 60).
- TOP SLAB = H20 LOADING.
- RISER (As .12)
- FLOOR (As .31) #5 BARS AT 12" C.C.E.W.

Rim: 1058' Rim to Invert: 4' Slack: 0" Sump: 0" Step Position: 134°

Position	Elev	Angle	Ext. (cw)	Pipe	Pipe OD	Connector	Hole	Horz Size	Up (_)	Offset
Invert 1	1054'	0°	0"	15" HDPE	17.6"	Hole 20	20"	20.629"	-1.3"	0"
Invert 2	1054'	268°	135.647"	15" HDPE	17.6"	Hole 20	20"	20.629"	-1.3"	0"
Invert 3										
Invert 4										
Invert 5										
Invert 6										
Invert 7										
Invert 8										

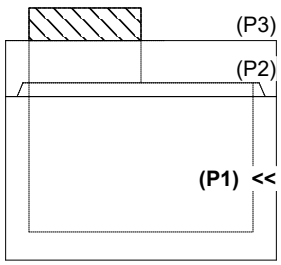

RIGHT-SIDE UP VIEW (int. dimensions)

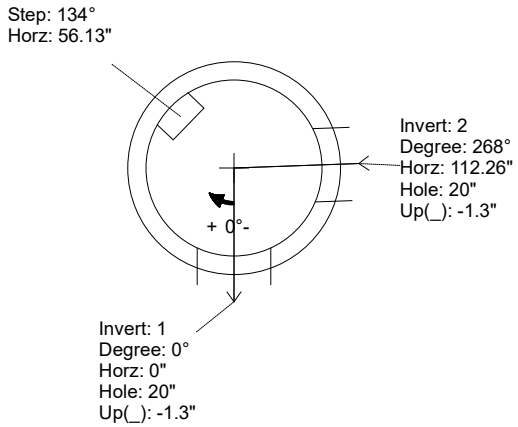

UPSIDE-DOWN VIEW (int. dimenions)

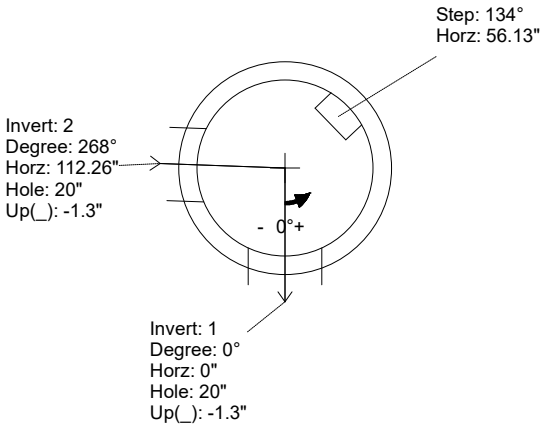

INSIDE WALL DIMENSIONS

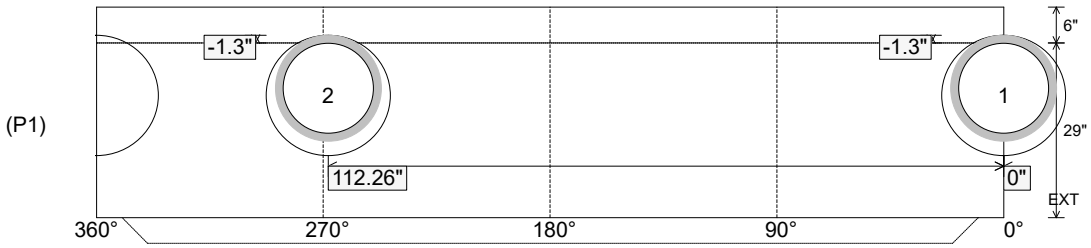

Coating (Int): Coating (Ext):	Seam Up: Tongue Seam Dn: n/a	Wall Thickness: 5" Floor Height: 6"	Height (Int): 29" Height (Ext): 35"	Weight (Net): 3086 lb Volume (Net): 0.79cu.yd