Job Name: 26-3054 ADS Couchville Online
Job Location: Nashville, TN
Contractor: ADS Advanced Drainage Systems, Inc.

Plant: Beaver Dam
7/23/2026 12:30:37 PM

Tech: S. Felletter
PC: T. Ryan

Structure ID: WQU2

P4 MH120RS24 MH RISER T/G

P6) 24" - CASTING HEIGHT - 7"	0 lb
P5) 120" - MH FLAT LID w/24in CON Hole F/G - 18"	16678 lb
P4) 120" - MH RISER T/G - 24"	9117 lb
P3) 120" - MH RISER T/G - 96"	34772 lb
P2) 120" - MH RISER Custom Ht T/G - 91"	34568 lb
P1) 120" - MH BASE T/n - 24"	25064 lb
1) ASSEMBLY REQUIRED - BRACKETS ONLY	0 lb
1) JOINT WRAP - 0.065"x6"x50' CONSEAL CS212	0 lb
1) JOINT WRAP PRIMER - CONSEAL CS-75 (1 gal.)	0 lb
1) CASTING - HOE MC-375 F/C Storm	271 lb
4) 120" - Conseal CS-102 1.00" (Double)	0 lb
1) 24" - Conseal CS-102 1.00" (Double)	0 lb
2) Hole - 34	0 lb
Structure Total:	120470 lb

Structure Notes: .
1. PER ASTM C478 SPECIFICATIONS.
2. CONCRETE = 4,000 PSI AT 28 DAYS.
3. CASTING BY ICAST (HOE MC-375 F/C "STORM").
4. LIFTING ANCHORS TO BE INSTALLED ON THE OUTSIDE OF THE STRUCTURE.
5. ASSEMBLY REQUIRED - BRACKETS ONLY.

.
REINFORCING PER ASTM A615 (GRADE 60).
- TOP SLAB (As .62) #5 BARS AT 6" C.C.E.W.
- RISER/WALLS (As .36)
- FLOOR (As .47) #5 BARS AT 8" C.C.E.W.

Rim: 554.82' Rim to Invert: 8.2' Slack: 0.4" Sump: 162" Step Position: 0°

Position	Elev	Angle	Ext. (cw)	Pipe	Pipe OD	Connector	Hole	Horz Size	Up (_)	Offset
Invert 1										
Invert 2										
Invert 3										
Invert 4										
Invert 5										
Invert 6										
Invert 7										
Invert 8										

RIGHT-SIDE UP VIEW (int. dimensions)

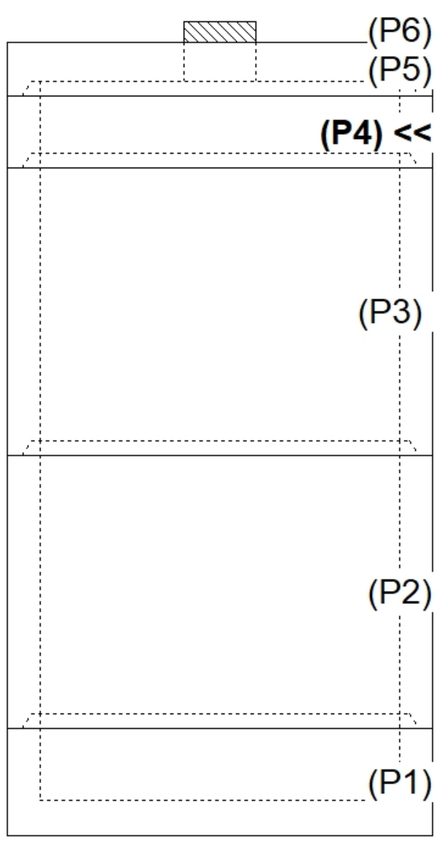

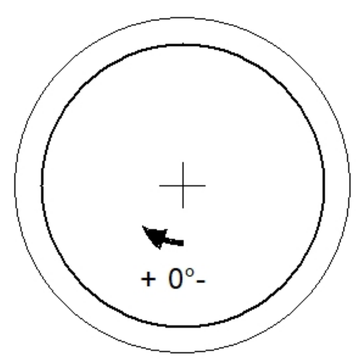

INSIDE WALL DIMENSIONS

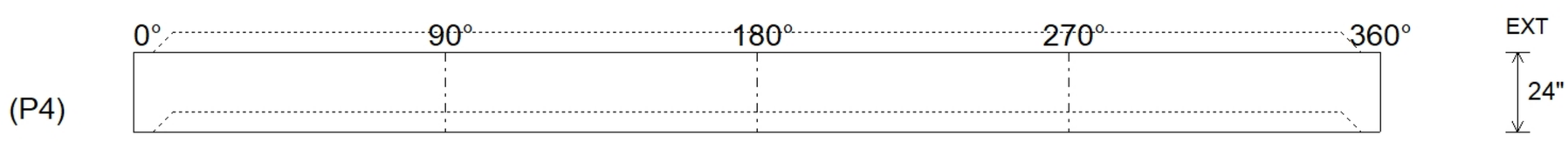

Coating (Int): Coating (Ext):	Seam Up: Tongue Seam Dn: Groove	Wall Thickness: 11" Floor Height: 0"	Height (Int): 24" Height (Ext): 24"	Weight (Net): 9117 lb Volume (Net): 2.33cu.yd

Job Name: 26-3054 ADS Couchville Online Job Location: Nashville, TN Contractor: ADS Advanced Drainage Systems, Inc.	Plant: Beaver Dam 7/23/2026 12:30:22 PM	Tech: S. Felletter PC: T. Ryan	

Structure ID: WQU1

P5 MH120LD18 MH FLAT LID w/24in CON Hole F/G

P6) 24" - CASTING HEIGHT - 7"	0 lb
P5) 120" - MH FLAT LID w/24in CON Hole F/G - 18"	16678 lb
P4) 120" - MH RISER T/G - 24"	9117 lb
P3) 120" - MH RISER T/G - 96"	34772 lb
P2) 120" - MH RISER T/G - 84"	31909 lb
P1) 120" - MH BASE T/n - 24"	25064 lb
1) ASSEMBLY REQUIRED - BRACKETS ONLY	0 lb
1) JOINT WRAP - 0.065"x6"x50' CONSEAL CS212	0 lb
1) JOINT WRAP PRIMER - CONSEAL CS-75 (1 gal.)	0 lb
1) CASTING - HOE MC-375 F/C Storm	271 lb
4) 120" - Conseal CS-102 1.00" (Double)	0 lb
1) 24" - Conseal CS-102 1.00" (Double)	0 lb
2) Hole - 34	0 lb
Structure Total:	117811 lb

Structure Notes: .
1. PER ASTM C478 SPECIFICATIONS.
2. CONCRETE = 4,000 PSI AT 28 DAYS.
3. CASTING BY ICAST (HOE MC-375 F/C "STORM").
4. LIFTING ANCHORS TO BE INSTALLED ON THE OUTSIDE OF THE STRUCTURE.
5. ASSEMBLY REQUIRED - BRACKETS ONLY.
.
REINFORCING PER ASTM A615 (GRADE 60).
- TOP SLAB (As .62) #5 BARS AT 6" C.C.E.W.
- RISER/WALLS (As .36)
- FLOOR (As .47) #5 BARS AT 8" C.C.E.W.

GENERAL NOTES:
1. MANUFACTURED TO ASTM C-478 (LATEST REVISION).
2. CONCRETE 5,000 PSI AT 28 DAYS.
3. REINFORCING: #4 & #5 BAR AS SHOWN (GRADE 60).
4. WEIGHT: 16,678 LBS.

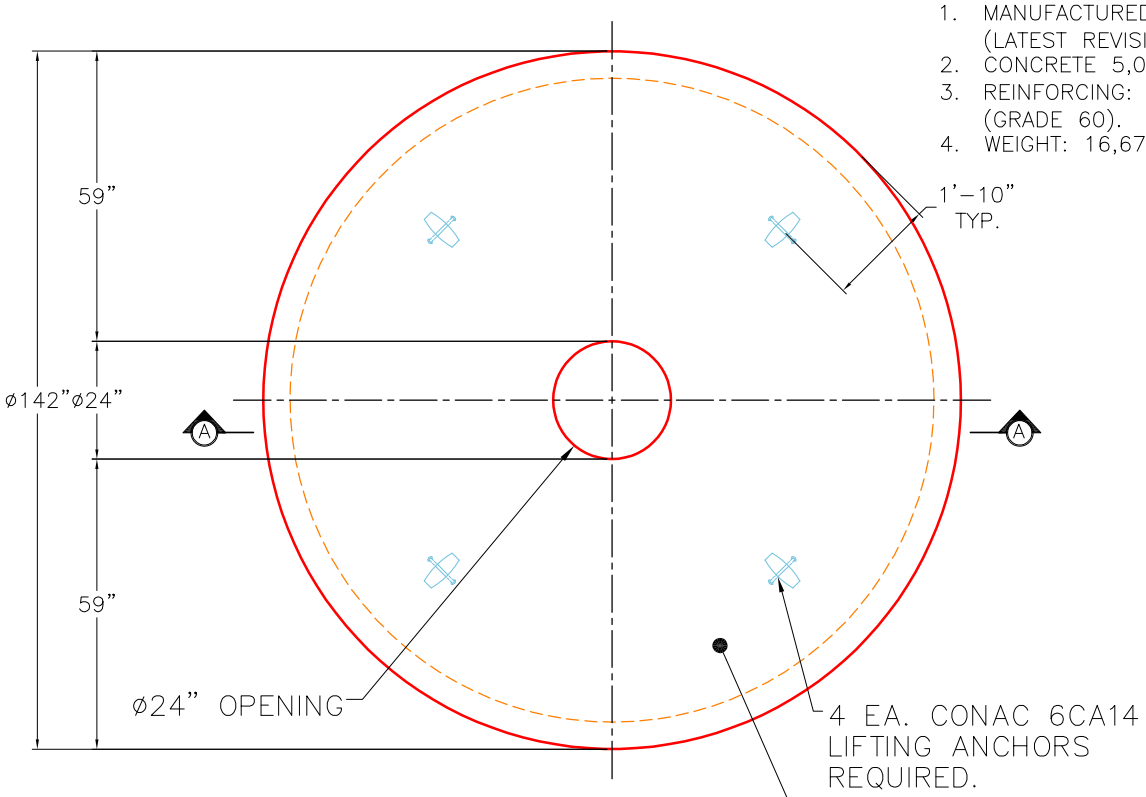

PLAN VIEW

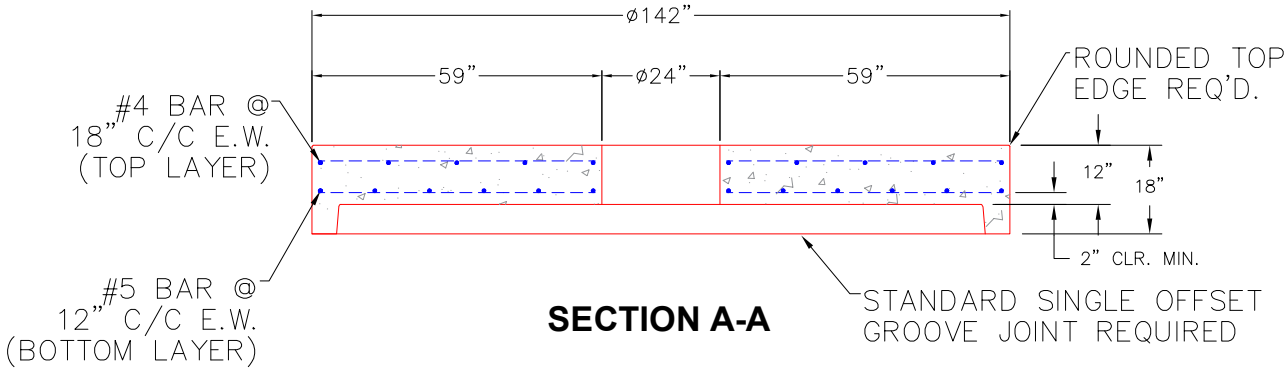

SECTION A-A

Coating (Int): Coating (Ext):	Seam Up: Flat Seam Dn: Groove	Wall Thickness: 11"	Height (Ext): 18"	Weight (Net): 16678 lb Volume (Net): 4.26cu.yd

Job Name: 26-3046 903454 2026 Street Reconstruction Job Location: Elk River, MN Contractor: Contech Engineering Solutions	Plant: Beaver Dam 7/17/2026 1:18:26 PM	Tech: S. Felletter PC: C. Goff	

Structure ID: Riser Set 4

P2 MH036LD10-30ECC **MH FLAT LID w/30in ECC Hole F/G**

P4) 30" - CASTING HEIGHT - 4"	0 lb
P3) 30" - GRADE RING F/F - 3"	138 lb
P2) 36" - MH FLAT LID w/30in ECC Hole F/G - 10"	683 lb
P1) 36" - MH RISER T/F - 54"	2278 lb
1) CVSTENCILING	0 lb
1) 36" - Conseal CS-102 1.00"	0 lb
5) MH Step ML-10-TDS-NCR - 10"	0 lb

Structure Total:	3099 lb

Structure Notes: .
1. PER ASTM C478 SPECIFICATIONS.
2. CONCRETE = 4,000 PSI AT 28 DAYS.
3. 4" CASTING PROVIDED BY OTHERS.
4. CONTECH'S LOGO TO BE STENCILED ONTO THE OUTSIDE OF THE STRUCTURE.

.
REINFORCING PER ASTM A615 (GRADE 60).
- TOP SLAB (As .62) #5 BARS AT 6" C.C.E.W.
- RISER/WALLS (As .12)

NOTES:
1. MANUFACTURED TO ASTM C-478 (LATEST REVISION).
2. CONCRETE: 4,000 PSI AT 28 DAYS.
3. REINFORCING: #5 BAR @ 6" O.C. E.W. (GRADE 60).

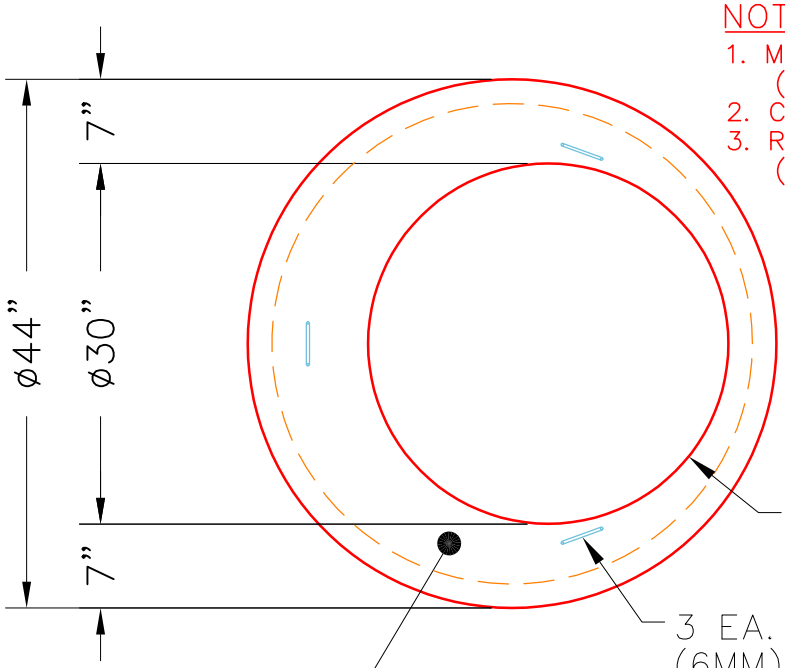

TOP VIEW

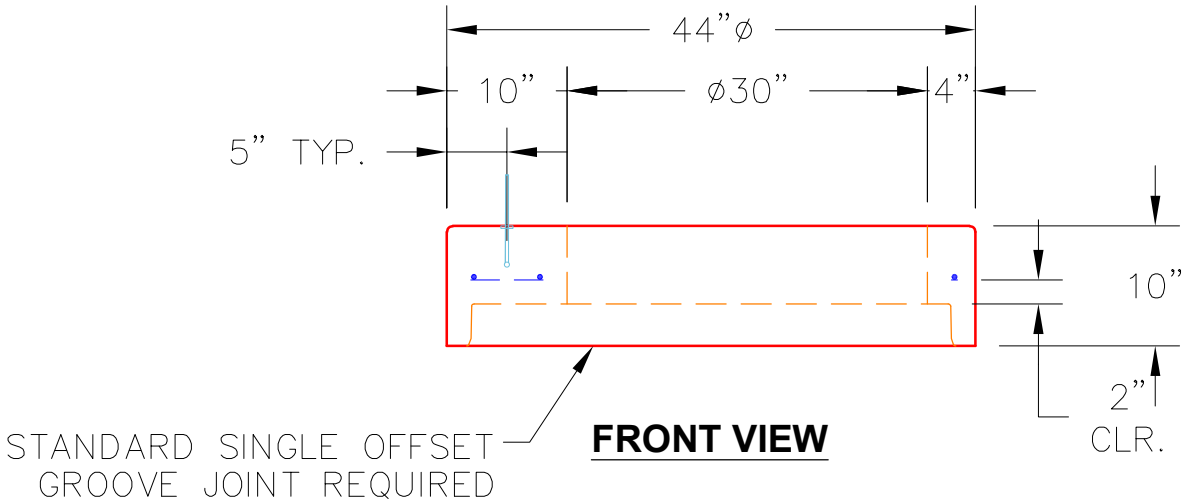

FRONT VIEW

Coating (Int): Coating (Ext):	Seam Up: Flat Seam Dn: Groove	Wall Thickness: 4"	Height (Ext): 10"	Weight (Net): 683 lb Volume (Net): 0.17cu.yd

Job Name: 26-2146 - Fairview Apartments Job Location: Russell Springs, KY 42642 Contractor: Dirt Design Construction LLC	Plant: 100 8/3/2026 11:47:15 AM	Tech: J. Horsley PC: M. Sullivan	

Structure ID: 08 ST-SCB

P2 MH048LD12-18x36 RECT **MH FLAT TOP w/18"x36" Hole**

P3) 18" x 36" - CASTING HEIGHT - 5.5"	0 lb
P2) 48" - MH FLAT TOP w/18"x36" Hole - 12"	2008 lb
P1) 48" - MH BASE Custom Ht - 27"	3131 lb
1) 48" - Conseal CS-102 1.00"	0 lb
1) Hole - 16	0 lb
Structure Total:	5139 lb

Structure Notes: 1. PER ASTM C478 SPECIFICATIONS.
2. CONCRETE = 4,000 PSI AT 28 DAYS.
3. CASTING BY OTHERS (HOE 580 F/G)
.
REINFORCING PER ASTM A615 (GRADE 60).
- TOP SLAB = H20 LOADING.
- WALLS (As .12) #5 BARS AT 12" C.C.E.W.
- FLOOR (As .12) #5 BARS AT 12" C.C.E.W.

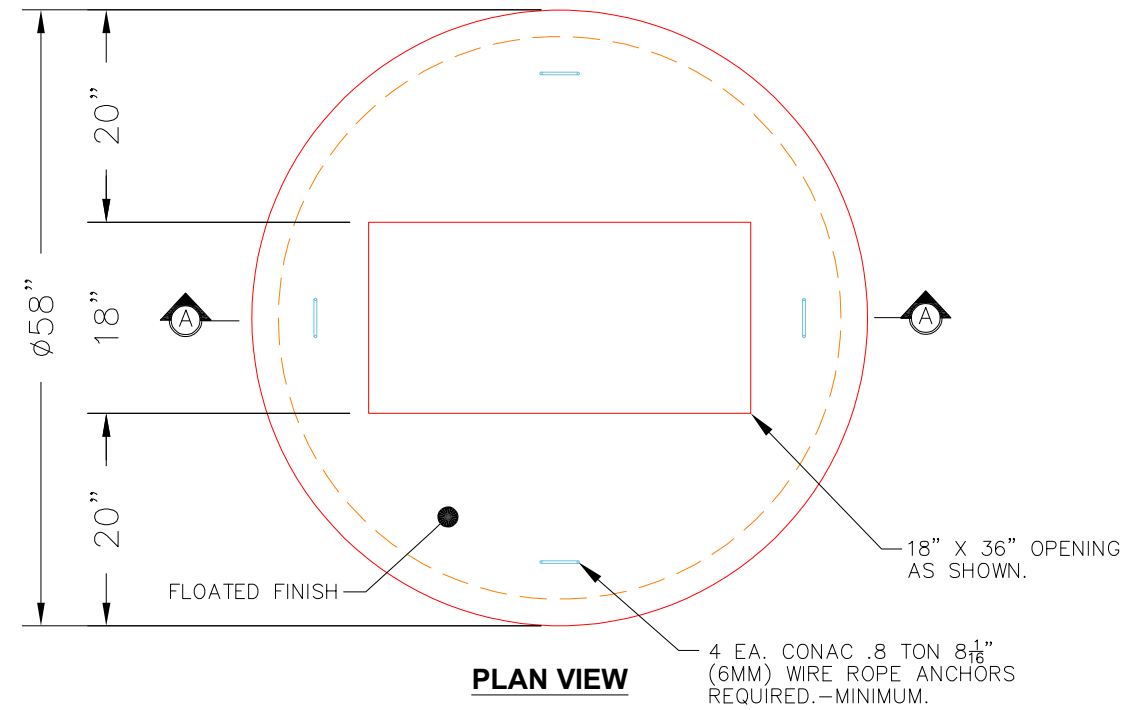

PLAN VIEW

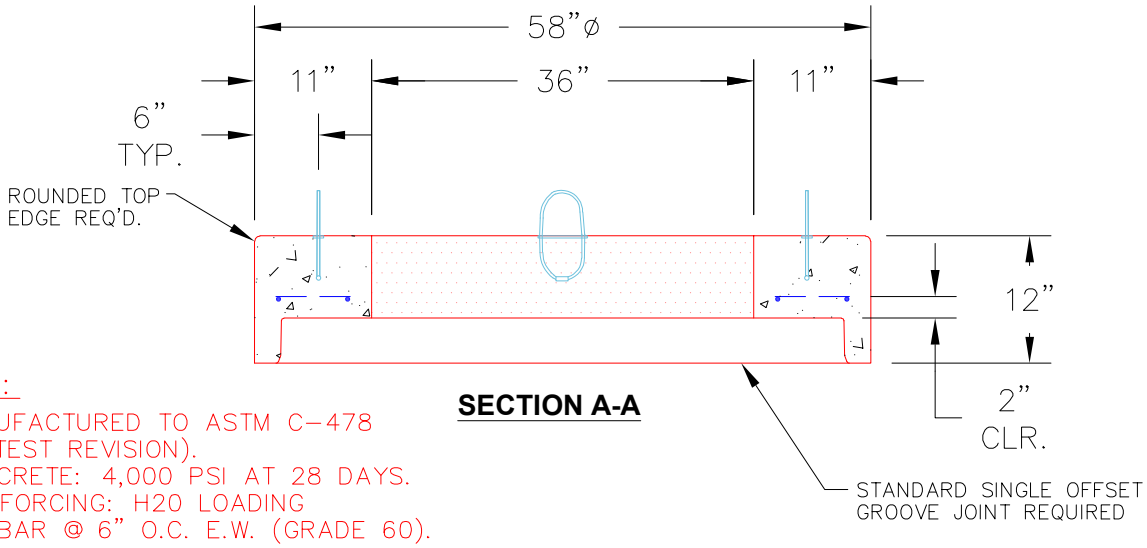

SECTION A-A

NOTES:
1. MANUFACTURED TO ASTM C-478 (LATEST REVISION).
2. CONCRETE: 4,000 PSI AT 28 DAYS.
3. REINFORCING: H20 LOADING #5 BAR @ 6" O.C. E.W. (GRADE 60).

Coating (Int): Coating (Ext):	Seam Up: Flat Seam Dn: Groove	Wall Thickness: 5"	Height (Ext): 12"	Weight (Net): 2008 lb Volume (Net): 0.51cu.yd

Job Name: 26-2146 - Fairview Apartments Job Location: Russell Springs, KY 42642 Contractor: Dirt Design Construction LLC	Plant: 100 8/3/2026 11:47:14 AM	Tech: J. Horsley PC: M. Sullivan	

Structure ID: 05 ST-SCB

P2 MH048LD12-18x36 RECT **MH FLAT TOP w/18"x36" Hole**

P3) 18" x 36" - CASTING HEIGHT - 5.5"	0 lb
P2) 48" - MH FLAT TOP w/18"x36" Hole - 12"	2008 lb
P1) 48" - MH BASE - 30"	3255 lb
1) 48" - Conseal CS-102 1.00"	0 lb
2) Hole - 16	0 lb
Structure Total:	5262 lb

Structure Notes: .
1. PER ASTM C478 SPECIFICATIONS.
2. CONCRETE = 4,000 PSI AT 28 DAYS.
3. CASTING BY OTHERS (HOE 580 F/G)

.
REINFORCING PER ASTM A615 (GRADE 60).
- TOP SLAB = H20 LOADING.
- RISER (As .12)
- FLOOR (As .31) #5 BARS AT 12" C.C.E.W.

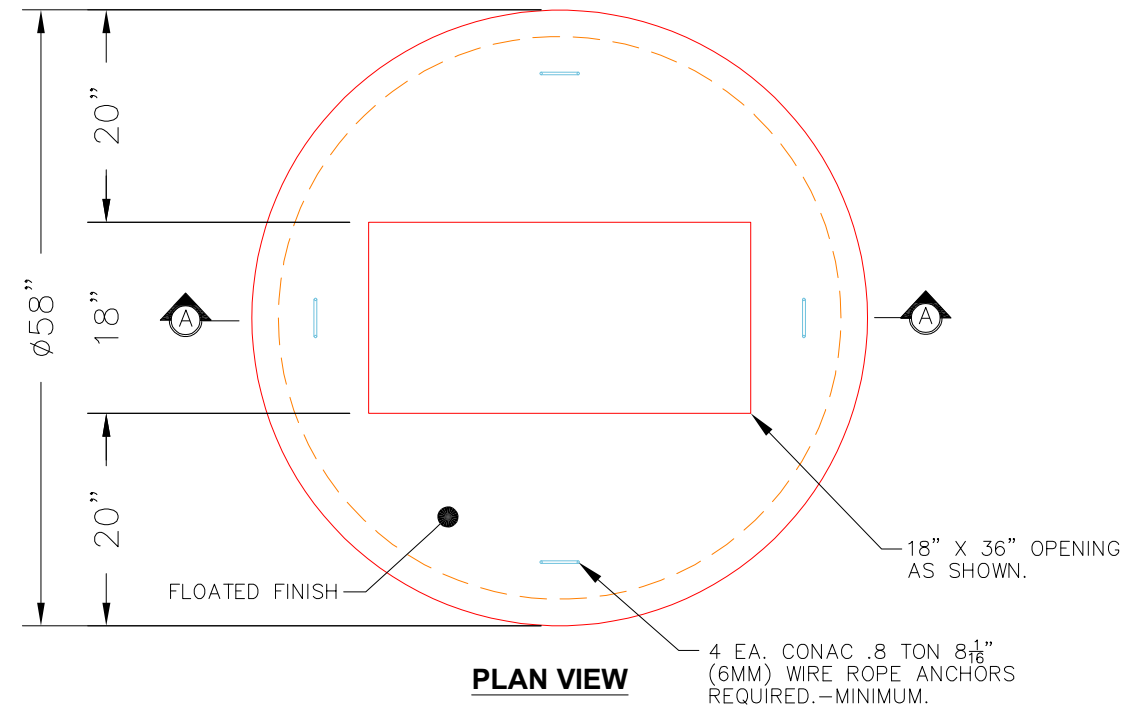

PLAN VIEW

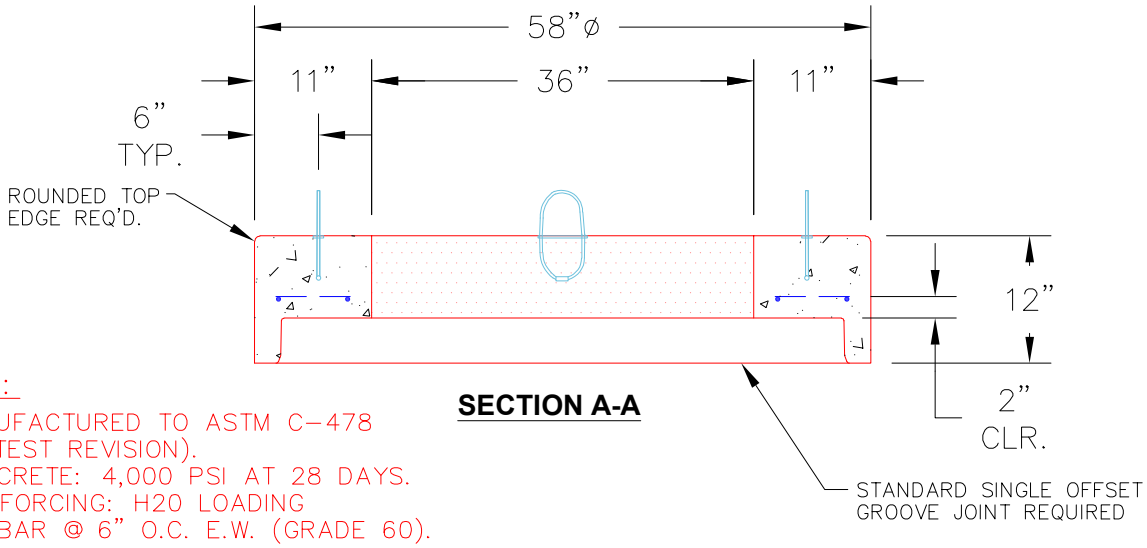

SECTION A-A

NOTES:
1. MANUFACTURED TO ASTM C-478 (LATEST REVISION).
2. CONCRETE: 4,000 PSI AT 28 DAYS.
3. REINFORCING: H20 LOADING #5 BAR @ 6" O.C. E.W. (GRADE 60).

Coating (Int): Coating (Ext):	Seam Up: Flat Seam Dn: Groove	Wall Thickness: 5"	Height (Ext): 12"	Weight (Net): 2008 lb Volume (Net): 0.51cu.yd

Job Name: 26-2146 - Fairview Apartments Job Location: Russell Springs, KY 42642 Contractor: Dirt Design Construction LLC	Plant: 100 8/3/2026 11:47:13 AM	Tech: J. Horsley PC: M. Sullivan	

Structure ID: MH 3 SS-MH

P2 MH048CN30 ECC CONE w/ 24" HOLE

P3) 24" - CASTING HEIGHT - 7"	0 lb
P2) 48" - ECC CONE w/ 24" HOLE - 30"	2050 lb
P1) 48" - MH BASE - 24"	2911 lb
1) 48" - MH INVERT CHANNEL - FULL HEIGHT	1440 lb
1) JOINT WRAP - 0.065"x6"x50' CONSEAL CS212	0 lb
1) JOINT WRAP PRIMER - CONSEAL CS-75 (1 gal.)	0 lb
1) 48" - Conseal CS-102 1.00" (Double)	0 lb
1) 24" - Conseal CS-102 1.00" (Double)	0 lb
2) PSX - 12-08 NYLO	16 lb
4) MH Step ML-10-TDS-NCR - 10"	0 lb
Structure Total:	6417 lb

Structure Notes: .
1. PER ASTM C478 SPECIFICATIONS.
2. CONCRETE = 4,000 PSI AT 28 DAYS.
3. CASTING BY OTHERS (HOE MC-420 F/C).
.
REINFORCING PER ASTM A615 (GRADE 60).
- CONE (As .12)
- RISER/WALLS (As .12)
- FLOOR (As .31) #5 BARS AT 12" C.C.E.W.

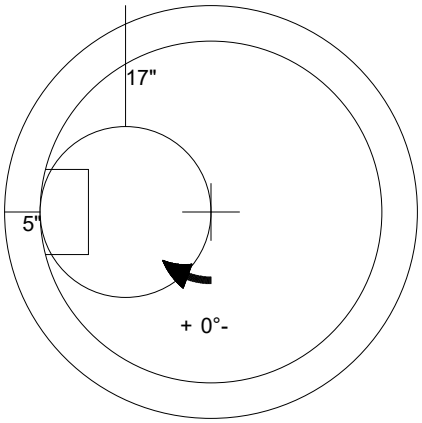

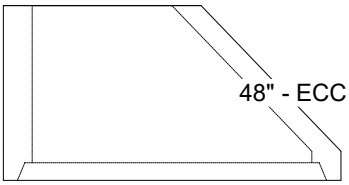

Coating (Int): Coating (Ext):	Seam Up: Flat Seam Dn: Groove	Wall Thickness: 5"	Height (Ext): 30"	Weight (Net): 2050 lb Volume (Net): 0.41cu.yd

Job Name: 26-2146 - Fairview Apartments Job Location: Russell Springs, KY 42642 Contractor: Dirt Design Construction LLC	Plant: 100 8/3/2026 11:47:13 AM	Tech: J. Horsley PC: M. Sullivan	

Structure ID: 02 ST-SCB

P2 MH048LD12S **MH FLAT TOP w/32"x32" Hole**

P3) 32" x 32" - CASTING HEIGHT - 3"	0 lb
P2) 48" - MH FLAT TOP w/32"x32" Hole - 12"	1629 lb
P1) 48" - MH BASE Custom Ht - 29"	3086 lb
1) 48" - Conseal CS-102 1.00"	0 lb
2) Hole - 20	0 lb
Structure Total:	4715 lb

Structure Notes: .
1. PER ASTM C478 SPECIFICATIONS.
2. CONCRETE = 4,000 PSI AT 28 DAYS.
3. CASTING BY OTHERS (HOE 595 F/G)

.
REINFORCING PER ASTM A615 (GRADE 60).
- TOP SLAB = H20 LOADING.
- RISER (As .12)
- FLOOR (As .31) #5 BARS AT 12" C.C.E.W.

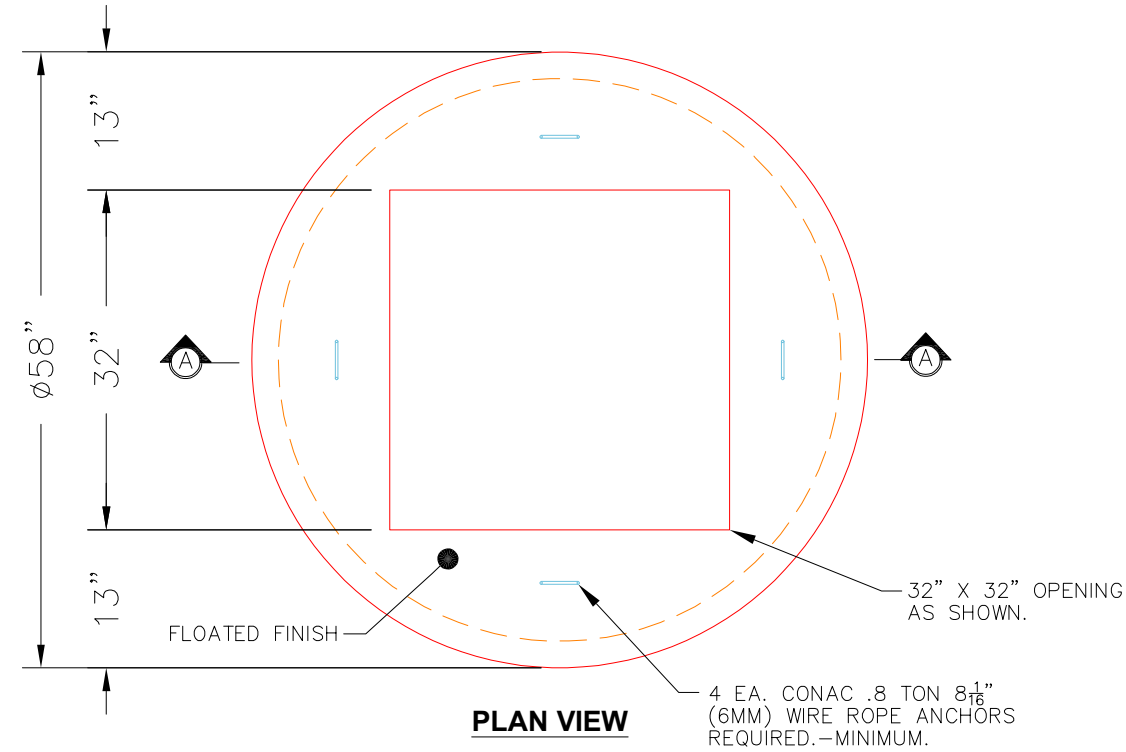

PLAN VIEW

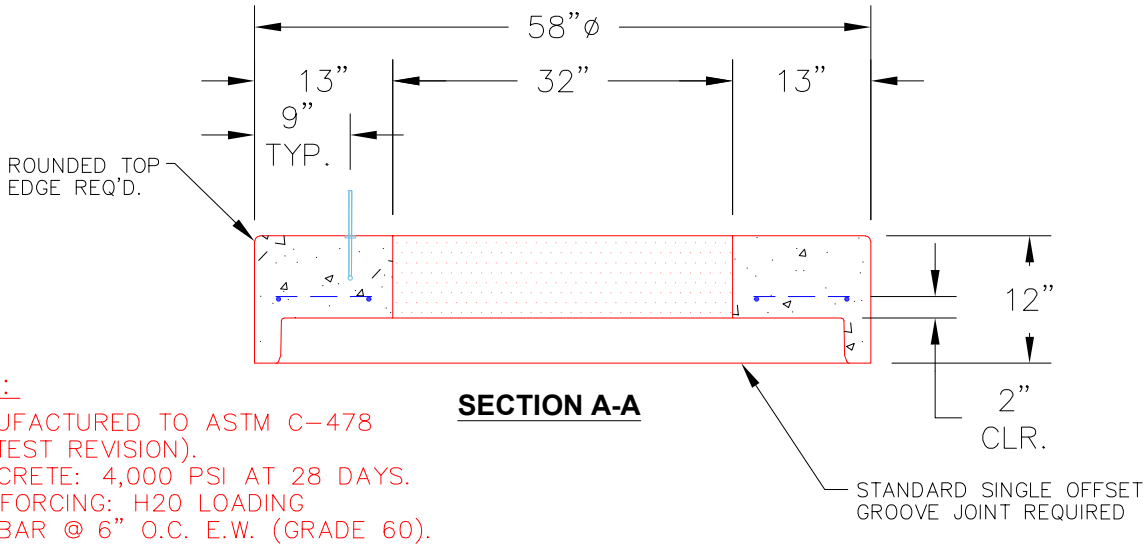

SECTION A-A

NOTES:
1. MANUFACTURED TO ASTM C-478 (LATEST REVISION).
2. CONCRETE: 4,000 PSI AT 28 DAYS.
3. REINFORCING: H20 LOADING #5 BAR @ 6" O.C. E.W. (GRADE 60).

Coating (Int): Coating (Ext):	Seam Up: Flat Seam Dn: Groove	Wall Thickness: 5"	Height (Ext): 12"	Weight (Net): 1629 lb Volume (Net): 0.42cu.yd

Job Name: 26-2146 - Fairview Apartments Job Location: Russell Springs, KY 42642 Contractor: Dirt Design Construction LLC	Plant: 100 8/3/2026 11:45:40 AM	Tech: J. Horsley PC: M. Sullivan	

Structure ID: 27 ST-DMH

P1 MH048BAVF **MH BASE Custom Ht**

P3) 24" - CASTING HEIGHT - 7"	0 lb
P2) 48" - MH FLAT TOP w/ 24" ECC Hole - 12"	1561 lb
P1) 48" - MH BASE Custom Ht - 29"	3086 lb
1) 48" - Conseal CS-102 1.00"	0 lb
2) Hole - 20	0 lb
2) MH Step ML-10-TDS-NCR - 10"	0 lb
Structure Total:	4647 lb

Structure Notes: .
1. PER ASTM C478 SPECIFICATIONS.
2. CONCRETE = 4,000 PSI AT 28 DAYS.
3. CASTING BY OTHERS (HOE MC-420 F/C)
.
REINFORCING PER ASTM A615 (GRADE 60).
- TOP SLAB = H20 LOADING.
- RISER (As .12)
- FLOOR (As .31) #5 BARS AT 12" C.C.E.W.

Rim: 1058' Rim to Invert: 4' Slack: 0" Sump: 0" Step Position: 134°

Position	Elev	Angle	Ext. (cw)	Pipe	Pipe OD	Connector	Hole	Horz Size	Up (_)	Offset
Invert 1	1054'	0°	0"	15" HDPE	17.6"	Hole 20	20"	20.629"	-1.3"	0"
Invert 2	1054'	268°	135.647"	15" HDPE	17.6"	Hole 20	20"	20.629"	-1.3"	0"
Invert 3										
Invert 4										
Invert 5										
Invert 6										
Invert 7										
Invert 8										

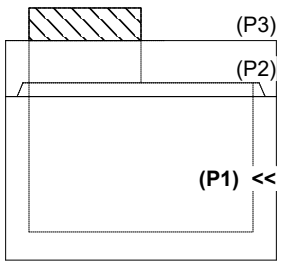

RIGHT-SIDE UP VIEW (int. dimensions)

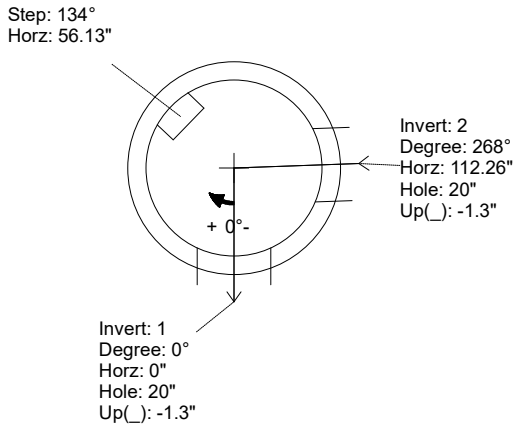

UPSIDE-DOWN VIEW (int. dimenions)

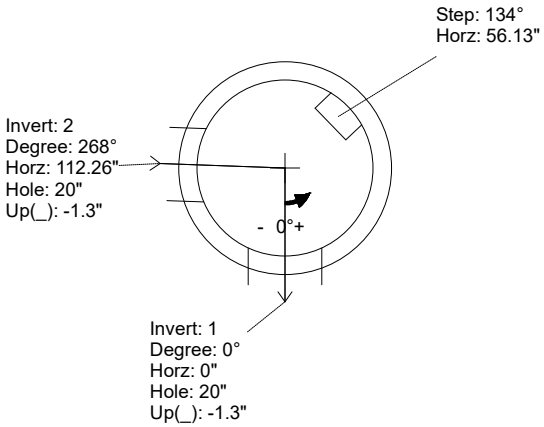

INSIDE WALL DIMENSIONS

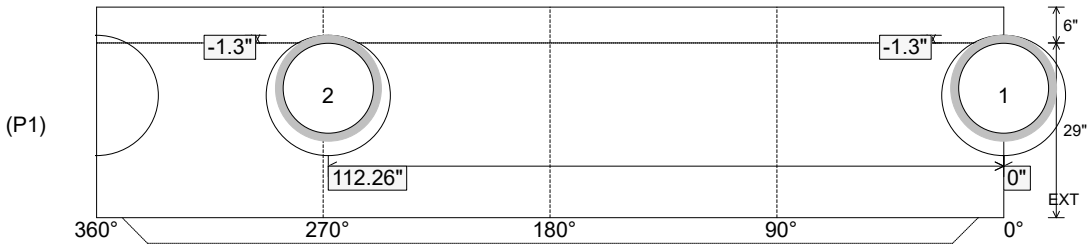

Coating (Int): Coating (Ext):	Seam Up: Tongue Seam Dn: n/a	Wall Thickness: 5" Floor Height: 6"	Height (Int): 29" Height (Ext): 35"	Weight (Net): 3086 lb Volume (Net): 0.79cu.yd

Job Name: 26-2146 - Fairview Apartments Job Location: Russell Springs, KY 42642 Contractor: Dirt Design Construction LLC	Plant: 100 8/3/2026 11:45:39 AM	Tech: J. Horsley PC: M. Sullivan	

Structure ID: 24 ST-SCB

P1 MH048BAVF **MH BASE Custom Ht**

P3) 32" x 32" - CASTING HEIGHT - 3"	0 lb
P2) 48" - MH FLAT TOP w/32"x32" Hole - 7"	950 lb
P1) 48" - MH BASE Custom Ht - 29"	2767 lb
1) 48" - Conseal CS-102 1.00"	0 lb
2) Hole - 24	0 lb
1) Hole - 16	0 lb
1) Hole - 18	0 lb
Structure Total:	3717 lb

Structure Notes: .
1. PER ASTM C478 SPECIFICATIONS.
2. CONCRETE = 4,000 PSI AT 28 DAYS.
3. CASTING BY OTHERS (HOE 595 F/G)
.
REINFORCING PER ASTM A615 (GRADE 60).
- TOP SLAB = H20 LOADING.
- RISER (As .12)
- FLOOR (As .31) #5 BARS AT 12" C.C.E.W.

Rim: 1057.33' Rim to Invert: 3.28' Slack: 0.36" Sump: 0" Step Position:

Position	Elev	Angle	Ext. (cw)	Pipe	Pipe OD	Connector	Hole	Horz Size	Up (_)	Offset
Invert 1	1054.05'	0°	0"	18" HDPE	21.2"	Hole 24	24"	25.133"	-1.6"	0"
Invert 2	1054.05'	185°	93.637"	18" HDPE	21.2"	Hole 24	24"	25.133"	-1.6"	0"
Invert 3	1054.05'	279°	141.215"	12" HDPE	14.5"	Hole 16	16"	16.312"	-1.25"	0"
Invert 4	1054.05'	90°	45.553"	12" HDPE	14.5"	Hole 18	18"	18.451"	-1.25"	0"
Invert 5										
Invert 6										
Invert 7										
Invert 8										

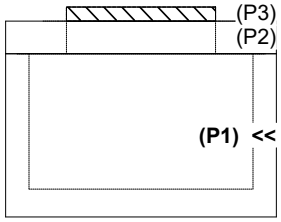

RIGHT-SIDE UP VIEW (int. dimensions)

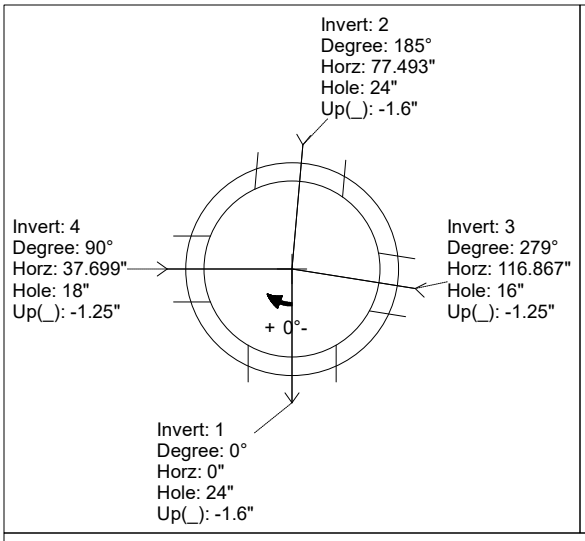

UPSIDE-DOWN VIEW (int. dimenions)

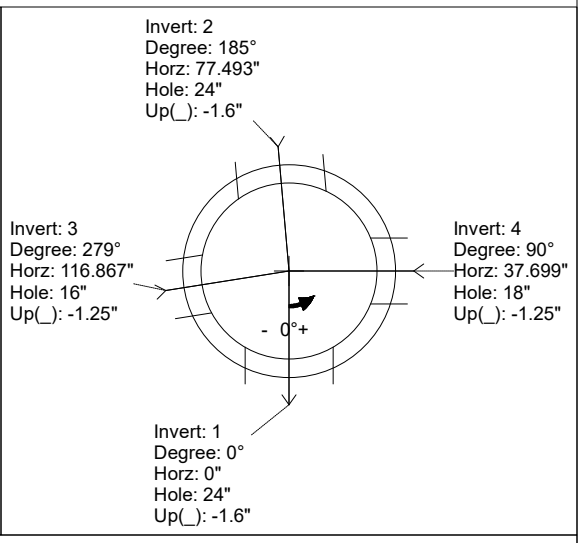

INSIDE WALL DIMENSIONS

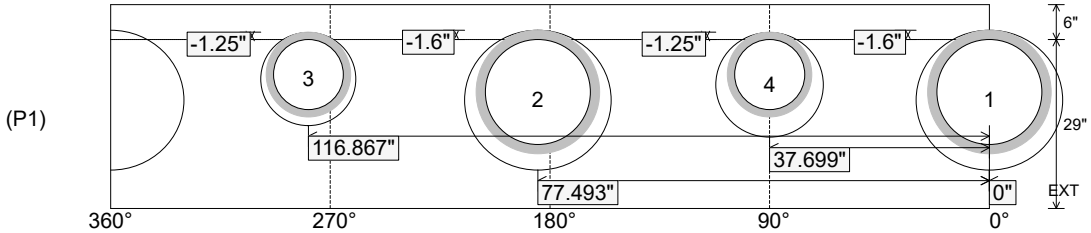

Coating (Int): Coating (Ext):	Seam Up: Flat Seam Dn: n/a	Wall Thickness: 5" Floor Height: 6"	Height (Int): 29" Height (Ext): 35"	Weight (Net): 2767 lb Volume (Net): 0.71cu.yd

Job Name: 26-2146 - Fairview Apartments Job Location: Russell Springs, KY 42642 Contractor: Dirt Design Construction LLC	Plant: 100 8/3/2026 11:47:19 AM	Tech: J. Horsley PC: M. Sullivan	

Structure ID: 24 ST-SCB

P2 MH048LD07S **MH FLAT TOP w/32"x32" Hole**

P3) 32" x 32" - CASTING HEIGHT - 3"	0 lb
P2) 48" - MH FLAT TOP w/32"x32" Hole - 7"	950 lb
P1) 48" - MH BASE Custom Ht - 29"	2767 lb
1) 48" - Conseal CS-102 1.00"	0 lb
2) Hole - 24	0 lb
1) Hole - 16	0 lb
1) Hole - 18	0 lb

Structure Total:	3717 lb

Structure Notes: .
1. PER ASTM C478 SPECIFICATIONS.
2. CONCRETE = 4,000 PSI AT 28 DAYS.
3. CASTING BY OTHERS (HOE 595 F/G)
.
REINFORCING PER ASTM A615 (GRADE 60).
- TOP SLAB = H20 LOADING.
- RISER (As .12)
- FLOOR (As .31) #5 BARS AT 12" C.C.E.W.

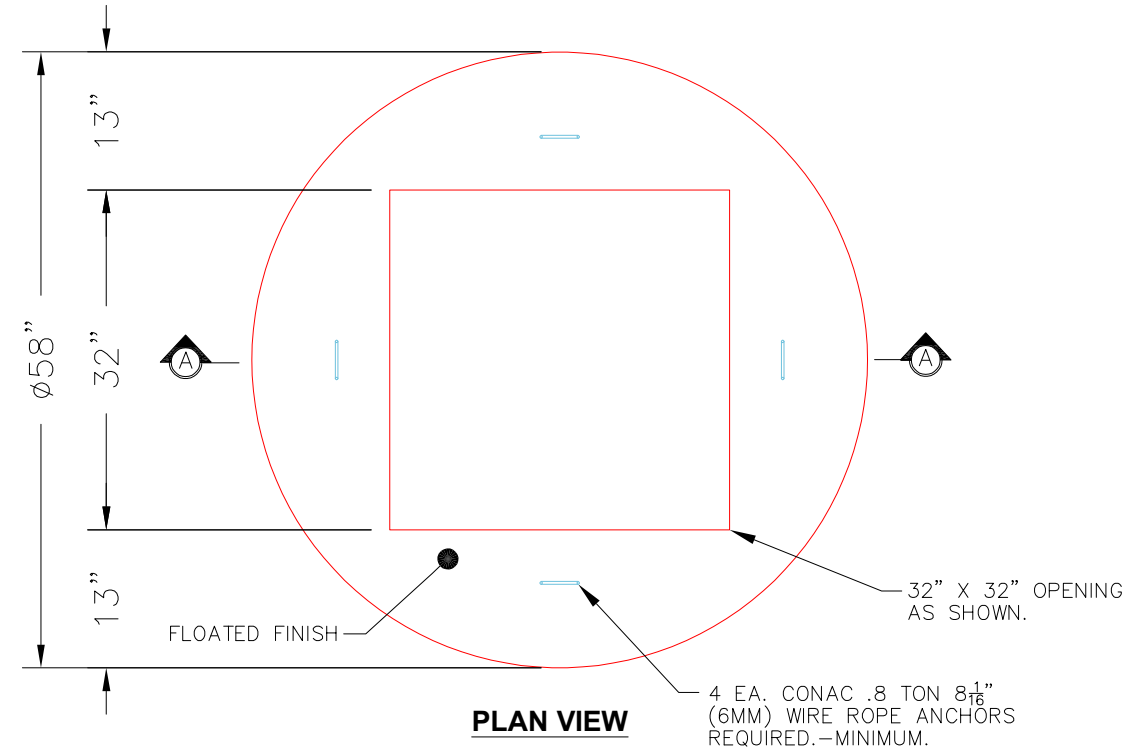

PLAN VIEW

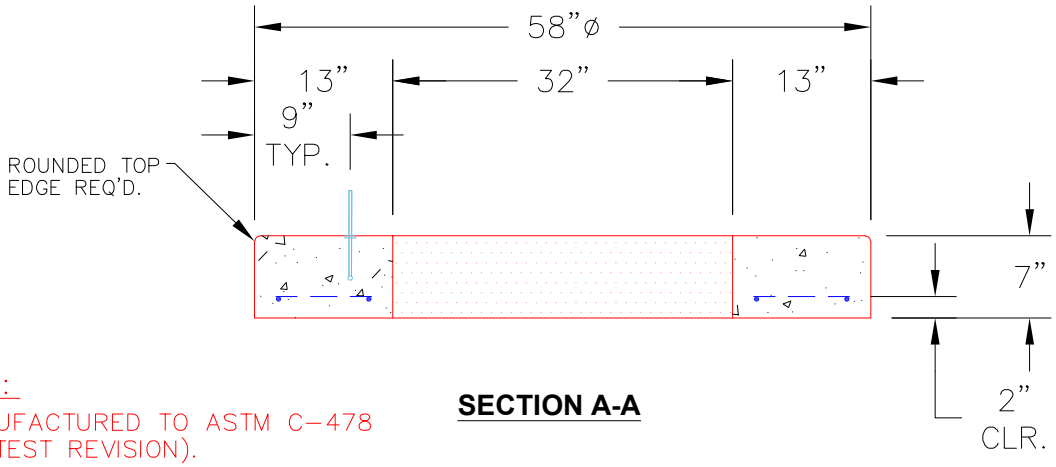

SECTION A-A

NOTES:
1. MANUFACTURED TO ASTM C-478 (LATEST REVISION).
2. CONCRETE: 4,000 PSI AT 28 DAYS.
3. REINFORCING: H20 LOADING #5 BAR @ 6" O.C. E.W. (GRADE 60).

Coating (Int): Coating (Ext):	Seam Up: Flat Seam Dn: Flat	Wall Thickness: 5"	Height (Ext): 7"	Weight (Net): 950 lb Volume (Net): 0.24cu.yd

Job Name: 26-2146 - Fairview Apartments Job Location: Russell Springs, KY 42642 Contractor: Dirt Design Construction LLC	Plant: 100 8/3/2026 11:45:37 AM	Tech: J. Horsley PC: M. Sullivan	

Structure ID: 21 ST-DCB

P1 MH048BAVF **MH BASE Custom Ht**

P3) 18" x 36" - CASTING HEIGHT - 5.5"	0 lb
P2) 48" - MH FLAT TOP w/18"x36" Hole - 12"	2008 lb
P1) 48" - MH BASE Custom Ht - 41"	3973 lb
1) 48" - Conseal CS-102 1.00"	0 lb
1) Hole - 20	0 lb
1) Hole - 16	0 lb
Structure Total:	5981 lb

Structure Notes: .
1. PER ASTM C478 SPECIFICATIONS.
2. CONCRETE = 4,000 PSI AT 28 DAYS.
3. CASTING BY OTHERS (HOE 580 F/G)
.
REINFORCING PER ASTM A615 (GRADE 60).
- TOP SLAB (As .62) #5 BARS AT 6" C.C.E.W.
- RISER (As .12).
- FLOOR (As .31) #5 BARS AT 12" C.C.E.W.

Rim: 1069.88' Rim to Invert: 4.88' Slack: 0.06" Sump: 0" Step Position:

Position	Elev	Angle	Ext. (cw)	Pipe	Pipe OD	Connector	Hole	Horz Size	Up (_)	Offset
Invert 1	1065'	0°	0"	15" HDPE	17.6"	Hole 20	20"	20.629"	-1.3"	0"
Invert 2	1065'	202°	102.241"	12" HDPE	14.5"	Hole 16	16"	16.312"	-1.25"	0"
Invert 3										
Invert 4										
Invert 5										
Invert 6										
Invert 7										
Invert 8										

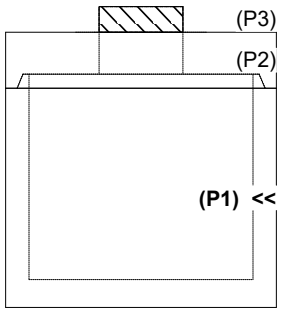

RIGHT-SIDE UP VIEW (int. dimensions)

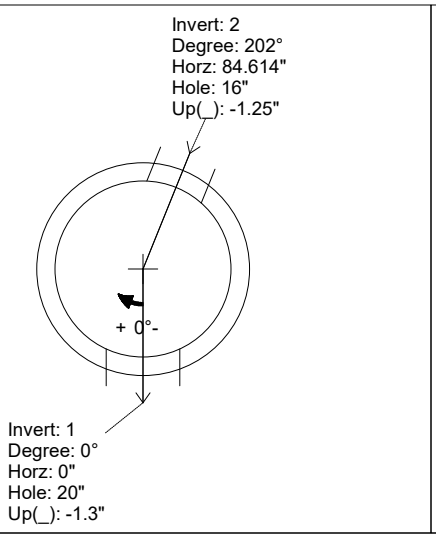

UPSIDE-DOWN VIEW (int. dimenions)

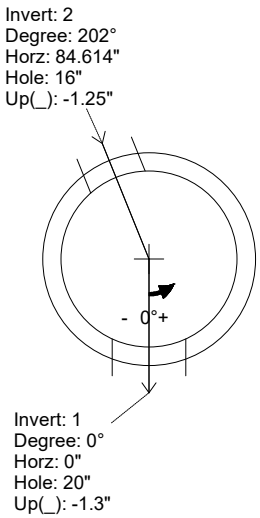

INSIDE WALL DIMENSIONS

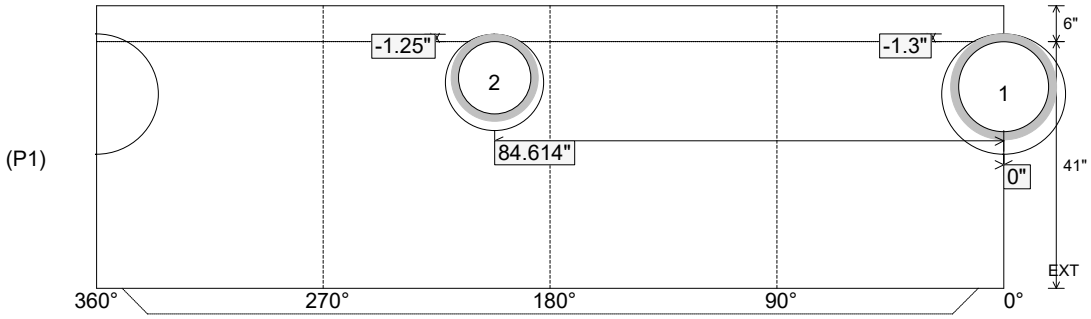

Coating (Int): Coating (Ext):	Seam Up: Tongue Seam Dn: n/a	Wall Thickness: 5" Floor Height: 6"	Height (Int): 41" Height (Ext): 47"	Weight (Net): 3973 lb Volume (Net): 1.01cu.yd

Job Name: 26-2146 - Fairview Apartments Job Location: Russell Springs, KY 42642 Contractor: Dirt Design Construction LLC	Plant: 100 8/3/2026 11:45:36 AM	Tech: J. Horsley PC: M. Sullivan	

Structure ID: 19 ST-DCB

P1 MH048BAVF **MH BASE Custom Ht**

P3) 32" x 32" - CASTING HEIGHT - 3"	0 lb
P2) 48" - MH FLAT TOP w/32"x32" Hole - 7"	950 lb
P1) 48" - MH BASE Custom Ht - 23"	2696 lb
1) 48" - Conseal CS-102 1.00"	0 lb
2) Hole - 20	0 lb
Structure Total:	3647 lb

Structure Notes: .
1. PER ASTM C478 SPECIFICATIONS.
2. CONCRETE = 4,000 PSI AT 28 DAYS.
3. CASTING BY OTHERS (HOE 595 F/G)
.
REINFORCING PER ASTM A615 (GRADE 60).
- TOP SLAB = H20 LOADING.
- RISER/WALLS (As .12)
- FLOOR (As .31) #5 BARS AT 12" C.C.E.W.

Rim: 1061.64' Rim to Invert: 2.78' Slack: 0.36" Sump: 0" Step Position:

Position	Elev	Angle	Ext. (cw)	Pipe	Pipe OD	Connector	Hole	Horz Size	Up (_)	Offset
Invert 1	1058.86'	0°	0"	15" HDPE	17.6"	Hole 20	20"	20.629"	-1.3"	0"
Invert 2	1058.86'	243°	122.993"	15" HDPE	17.6"	Hole 20	20"	20.629"	-1.3"	0"
Invert 3										
Invert 4										
Invert 5										
Invert 6										
Invert 7										
Invert 8										

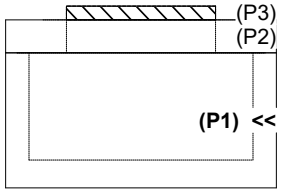

RIGHT-SIDE UP VIEW (int. dimensions)

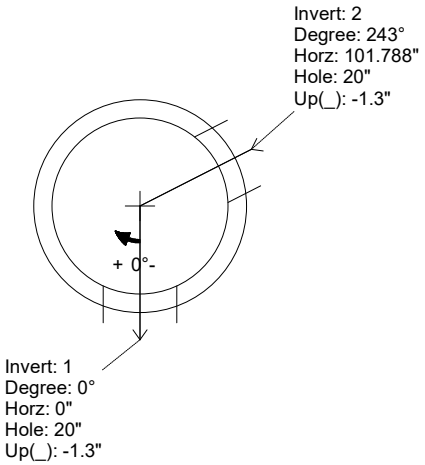

UPSIDE-DOWN VIEW (int. dimenions)

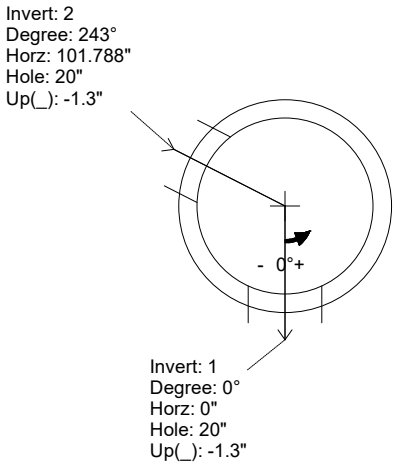

INSIDE WALL DIMENSIONS

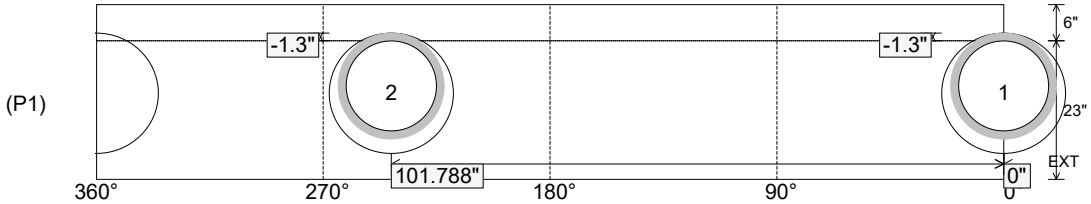

Coating (Int): Coating (Ext):	Seam Up: Flat Seam Dn: n/a	Wall Thickness: 5" Floor Height: 6"	Height (Int): 23" Height (Ext): 29"	Weight (Net): 2696 lb Volume (Net): 0.69cu.yd

Job Name: 26-2146 - Fairview Apartments Job Location: Russell Springs, KY 42642 Contractor: Dirt Design Construction LLC	Plant: 100 8/3/2026 11:45:35 AM	Tech: J. Horsley PC: M. Sullivan	

Structure ID: 18 ST-DCB

P1 MH048BAVF **MH BASE Custom Ht**

P3) 18" x 36" - CASTING HEIGHT - 5.5"	0 lb
P2) 48" - MH FLAT TOP w/18"x36" Hole - 7"	1171 lb
P1) 48" - MH BASE Custom Ht - 21"	2527 lb
1) 48" - Conseal CS-102 1.00"	0 lb
2) Hole - 20	0 lb
Structure Total:	3698 lb

Structure Notes: .
1. PER ASTM C913 SPECIFICATIONS.
2. CONCRETE = 4,000 PSI AT 28 DAYS.
3. CASTING BY OTHERS (HOE 580 F/G)

.
REINFORCING PER ASTM A615 (GRADE 60).
- TOP SLAB = H20 LOADING.
- WALLS (As .12)
- FLOOR (As .31) #5 BARS AT 12" C.C.E.W.

Rim: 1061.3' Rim to Invert: 2.8' Slack: 0.1" Sump: 0" Step Position:

Position	Elev	Angle	Ext. (cw)	Pipe	Pipe OD	Connector	Hole	Horz Size	Up (_)	Offset
Invert 1	1058.5'	0°	0"	15" HDPE	17.6"	Hole 20	20"	20.629"	-1.3"	0"
Invert 2	1058.5'	157°	79.465"	15" HDPE	17.6"	Hole 20	20"	20.629"	-1.3"	0"
Invert 3										
Invert 4										
Invert 5										
Invert 6										
Invert 7										
Invert 8										

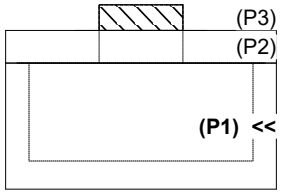

RIGHT-SIDE UP VIEW (int. dimensions)

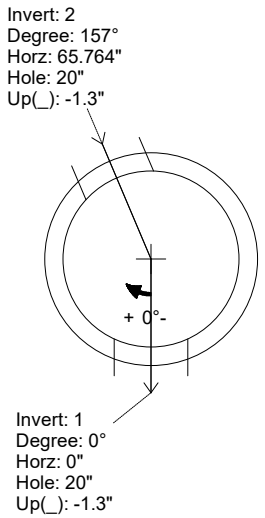

UPSIDE-DOWN VIEW (int. dimenions)

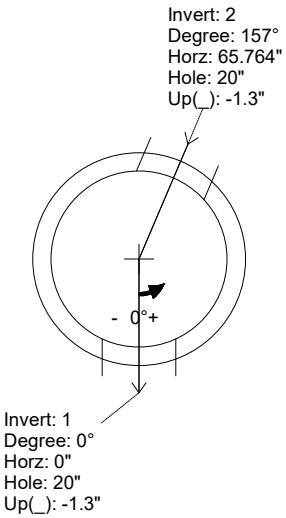

INSIDE WALL DIMENSIONS

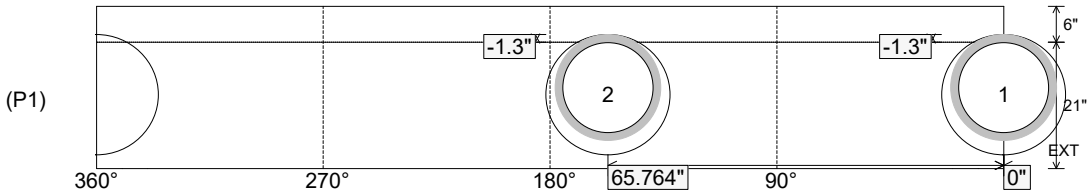

Coating (Int): Coating (Ext):	Seam Up: Flat Seam Dn: n/a	Wall Thickness: 5" Floor Height: 6"	Height (Int): 21" Height (Ext): 27"	Weight (Net): 2527 lb Volume (Net): 0.64cu.yd

Job Name: 26-2146 - Fairview Apartments Job Location: Russell Springs, KY 42642 Contractor: Dirt Design Construction LLC	Plant: 100 8/3/2026 11:45:35 AM	Tech: J. Horsley PC: M. Sullivan	

Structure ID: 17 ST-DCB

P1 MH048BA30 MH BASE

P3) 18" x 36" - CASTING HEIGHT - 5.5"	0 lb
P2) 48" - MH FLAT TOP w/18"x36" Hole - 7"	1171 lb
P1) 48" - MH BASE - 30"	3008 lb
1) 48" - Conseal CS-102 1.00"	0 lb
1) Hole - 24	0 lb
1) Hole - 20	0 lb
1) Hole - 16	0 lb
Structure Total:	4179 lb

Structure Notes: .
1. PER ASTM C478 SPECIFICATIONS.
2. CONCRETE = 4,000 PSI AT 28 DAYS.
3. CASTING BY OTHERS (HOE 580 F/G)
.
REINFORCING PER ASTM A615 (GRADE 60).
- TOP SLAB = H20 LOADING.
- RISER (As .12)
- FLOOR (As .31) #5 BARS AT 12" C.C.E.W.

Rim: 1058.88' Rim to Invert: 3.63' Slack: 1.06" Sump: 0" Step Position:

Position	Elev	Angle	Ext. (cw)	Pipe	Pipe OD	Connector	Hole	Horz Size	Up (_)	Offset
Invert 1	1055.25'	0°	0"	18" HDPE	21.2"	Hole 24	24"	25.133"	-1.6"	0"
Invert 2	1055.25'	150°	75.922"	15" HDPE	17.6"	Hole 20	20"	20.629"	-1.3"	0"
Invert 3	1055.25'	233°	117.932"	12" HDPE	14.5"	Hole 16	16"	16.312"	-1.25"	0"
Invert 4										
Invert 5										
Invert 6										
Invert 7										
Invert 8										

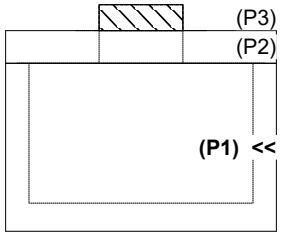

RIGHT-SIDE UP VIEW (int. dimensions)

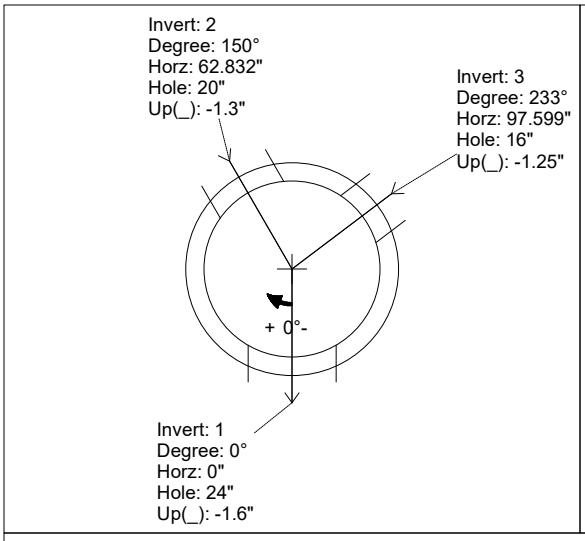

UPSIDE-DOWN VIEW (int. dimenions)

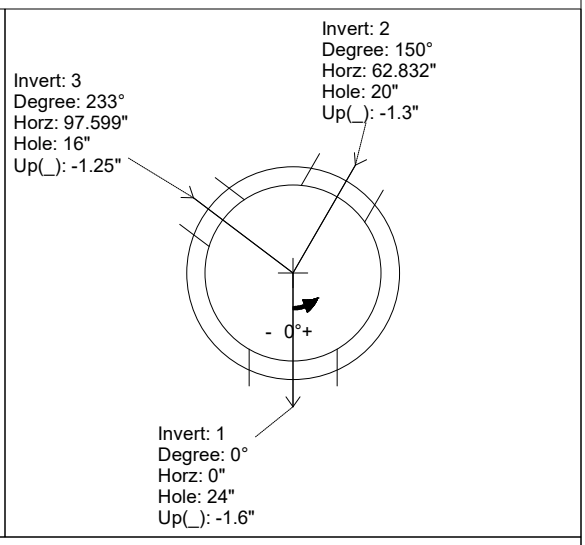

INSIDE WALL DIMENSIONS

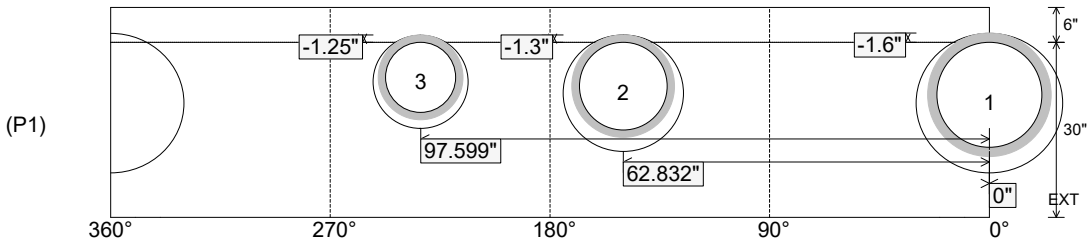

Coating (Int): Coating (Ext):	Seam Up: Flat Seam Dn: n/a	Wall Thickness: 5" Floor Height: 6"	Height (Int): 30" Height (Ext): 36"	Weight (Net): 3008 lb Volume (Net): 0.77cu.yd

Job Name: 26-2146 - Fairview Apartments Job Location: Russell Springs, KY 42642 Contractor: Dirt Design Construction LLC	Plant: 100 8/3/2026 11:45:33 AM	Tech: J. Horsley PC: M. Sullivan	

Structure ID: 14 ST-SCB

P1 MH048BAVF **MH BASE Custom Ht**

P3) 18" x 36" - CASTING HEIGHT - 5.5"	0 lb
P2) 48" - MH FLAT TOP w/18"x36" Hole - 12"	2008 lb
P1) 48" - MH BASE Custom Ht - 46"	4351 lb
1) 48" - Conseal CS-102 1.00"	0 lb
2) Hole - 16	0 lb
1) Hole - 8	0 lb

Structure Total:	6359 lb

Structure Notes: .
1. PER ASTM C478 SPECIFICATIONS.
2. CONCRETE = 4,000 PSI AT 28 DAYS.
3. CASTING BY OTHERS (HOE 580 F/G)
.
REINFORCING PER ASTM A615 (GRADE 60).
- TOP SLAB = H20 LOADING.
- RISER (As .12)
- FLOOR (As .31) #5 BARS AT 12" C.C.E.W.

Rim: 1070.95' Rim to Invert: 5.3' Slack: 0.1" Sump: 0" Step Position:

Position	Elev	Angle	Ext. (cw)	Pipe	Pipe OD	Connector	Hole	Horz Size	Up (_)	Offset
Invert 1	1065.65'	0°	0"	12" HDPE	14.5"	Hole 16	16"	16.312"	-1.25"	0"
Invert 2	1065.65'	155°	78.453"	12" HDPE	14.5"	Hole 16	16"	16.312"	-1.25"	0"
Invert 3	1066'	90°	45.553"	8" Hole	8"	Hole 8	8"	8.038"	4.2"	0"
Invert 4										
Invert 5										
Invert 6										
Invert 7										
Invert 8										

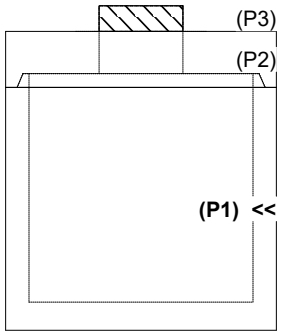

RIGHT-SIDE UP VIEW (int. dimensions)

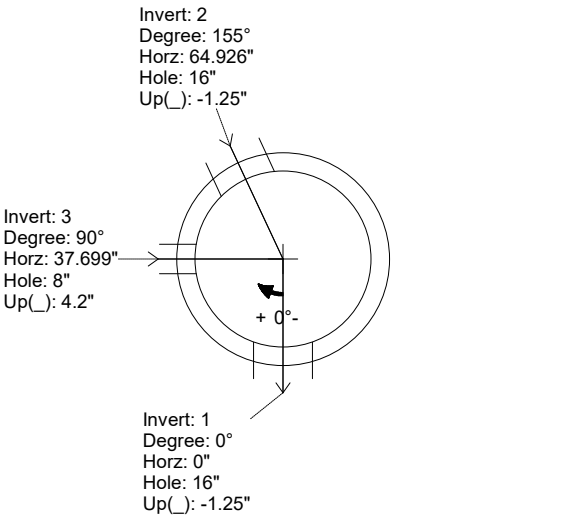

UPSIDE-DOWN VIEW (int. dimenions)

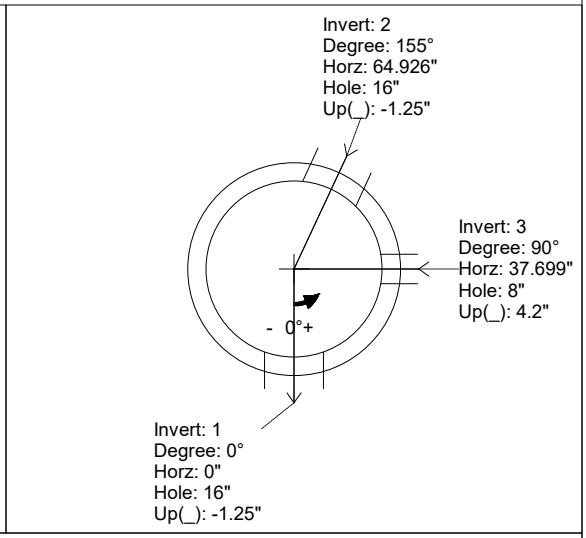

INSIDE WALL DIMENSIONS

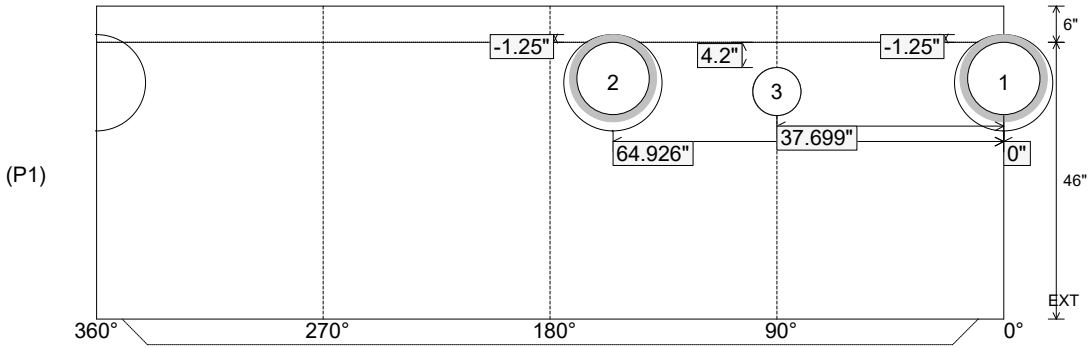

Coating (Int): Coating (Ext):	Seam Up: Tongue Seam Dn: n/a	Wall Thickness: 5" Floor Height: 6"	Height (Int): 46" Height (Ext): 52"	Weight (Net): 4351 lb Volume (Net): 1.11cu.yd

Job Name: 26-2146 - Fairview Apartments Job Location: Russell Springs, KY 42642 Contractor: Dirt Design Construction LLC	Plant: 100 8/3/2026 11:45:32 AM	Tech: J. Horsley PC: M. Sullivan	

Structure ID: 13 ST-SCB

P1 MH048BAVF **MH BASE Custom Ht**

P3) 18" x 36" - CASTING HEIGHT - 5.5"	0 lb
P2) 48" - MH FLAT TOP w/18"x36" Hole - 12"	2008 lb
P1) 48" - MH BASE Custom Ht - 35"	3561 lb
1) 48" - Conseal CS-102 1.00"	0 lb
2) Hole - 16	0 lb
2) Hole - 8	0 lb
Structure Total:	5569 lb

Structure Notes: .
1. PER ASTM C913 SPECIFICATIONS.
2. CONCRETE = 4,000 PSI AT 28 DAYS.
3. CASTING BY OTHERS (HOE 580 F/G)
.
REINFORCING PER ASTM A615 (GRADE 60).
- TOP SLAB = H20 LOADING.
- RISER (As .12)
- FLOOR (As .31) #5 BARS AT 12" C.C.E.W.

Rim: 1070.7' Rim to Invert: 4.45' Slack: 0.9" Sump: 0" Step Position:

Position	Elev	Angle	Ext. (cw)	Pipe	Pipe OD	Connector	Hole	Horz Size	Up (_)	Offset
Invert 1	1066.25'	0°	0"	12" HDPE	14.5"	Hole 16	16"	16.312"	-1.25"	0"
Invert 2	1066.25'	90°	45.553"	12" HDPE	14.5"	Hole 16	16"	16.312"	-1.25"	0"
Invert 3	1067'	45°	22.777"	8" Hole	8"	Hole 8	8"	8.038"	9"	0"
Invert 4	1067'	135°	68.33"	8" Hole	8"	Hole 8	8"	8.038"	9"	0"
Invert 5										
Invert 6										
Invert 7										
Invert 8										

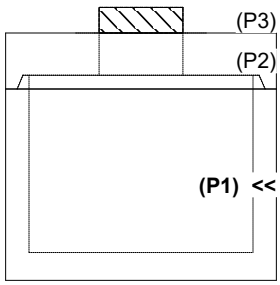

RIGHT-SIDE UP VIEW (int. dimensions)

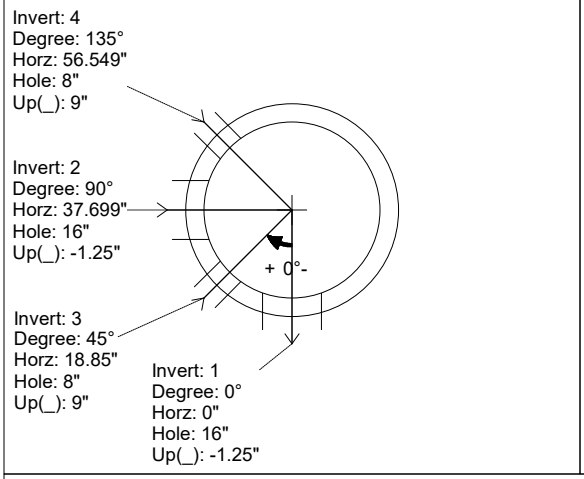

UPSIDE-DOWN VIEW (int. dimenions)

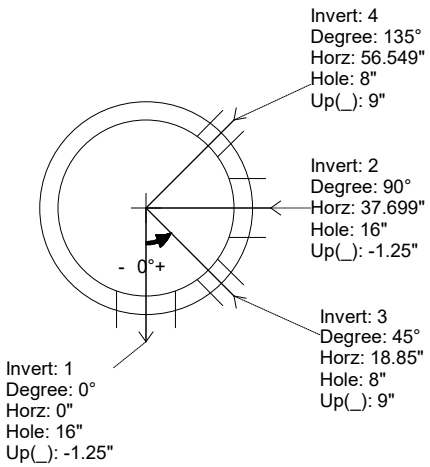

INSIDE WALL DIMENSIONS

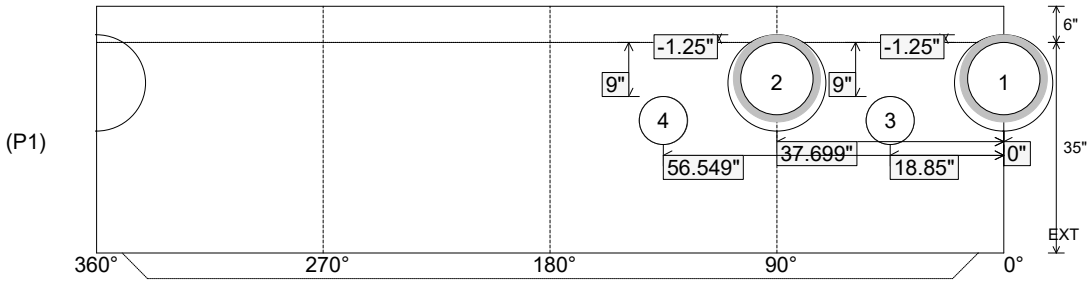

Coating (Int): Coating (Ext):	Seam Up: Tongue Seam Dn: n/a	Wall Thickness: 5" Floor Height: 6"	Height (Int): 35" Height (Ext): 41"	Weight (Net): 3561 lb Volume (Net): 0.91cu.yd

Job Name: 25-4490P1 Heartland Meadows Subdivision Job Location: Elizabethtown, KY 40165 Contractor: Kauffeld Brothers Construction	Plant: 100 7/23/2026 12:36:46 PM	Tech: Jared - A PC: Celina Goff	

Structure ID: MH 1-8 (9)

P1 MH048BAVF-D **MH BASE w/DROP Custom Ht**

P6) 24" - CASTING HEIGHT - 7"	0 lb
P5) 24" - GRADE RING - 4"	270 lb
P4) 48" - ECC CONE w/ 24" HOLE - 42"	3200 lb
P3) 48" - MH RISER - 36"	2515 lb
P2) 48" - MH RISER w/DROP - 48"	5403 lb
P1) 48" - MH BASE w/DROP Custom Ht - 30"	4866 lb
1) 48" - MH INVERT CHANNEL - FULL HEIGHT	1440 lb
1) JOINT WRAP - 0.065"x6"x50' CONSEAL CS212	0 lb
1) JOINT WRAP PRIMER - CONSEAL CS-75 (1 gal.)	0 lb
1) CASTING - HOE MC-375 F/C Sanitary	271 lb
3) 48" - Conseal CS-102 1.00" (Double)	0 lb
2) 24" - Conseal CS-102 1.00" (Double)	0 lb
2) PSX - 12-06 NYLO	16 lb
1) Drop Elbow - 6" PVC	0 lb
1) Drop Tee - 6" PVC	0 lb
13) MH Step ML-10-TDS-NCR - 10"	0 lb
Structure Total:	17981 lb

Rim: 897.51' Rim to Invert: 13.71' Slack: 0.52" Sump: 3" Step Position: 90°

Structure Notes: .
1. HOE MC-375 F/C "SANITARY" PROVIDED BY ICAST.
2. PER ASTM C478 SPECIFICATIONS.
3. CONCRETE = 4,000 PSI AT 28 DAYS.
4. REINFORCING PER ASTM A615 (GRADE 60).
- CONE (As .12)
- RISER/WALLS (As .12)
- FLOOR (As .31) #5 BARS AT 12" C.C.E.W.

Position	Elev	Angle	Ext. (cw)	Pipe	Pipe OD	Connector	Hole	Horz Size	Up (_)	Offset
Invert 1	883.8'	0°	0"	6" PVC SDR35	6.25"	PSX 12-06 NYLO	12"	12.129"	0"	0"
Invert 2	883.9'	147°	74.403"	6" PVC SDR35	6.25"	Drop Elbow 6" PVC	6.5"	6.52"	3.95"	0"
Invert 3										
Invert 4	883.9'	242°	122.487"	6" PVC SDR35	6.25"	PSX 12-06 NYLO	12"	12.129"	1.2"	0"
Invert 5										
Invert 6										
Invert 7										
Invert 8										

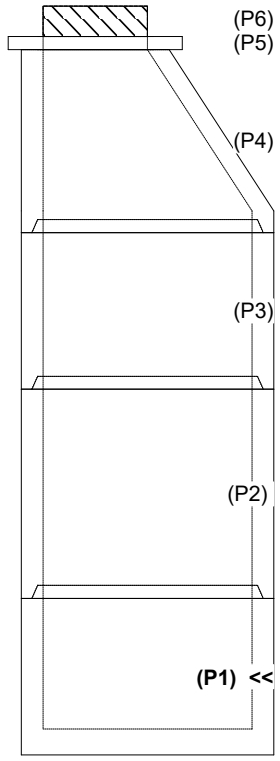

RIGHT-SIDE UP VIEW (int. dimensions)

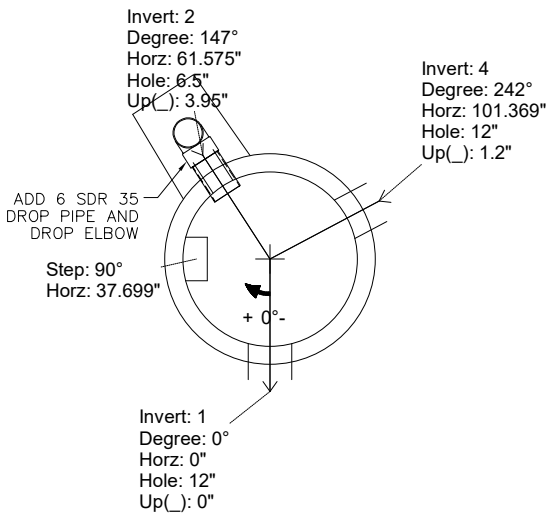

UPSIDE-DOWN VIEW (int. dimenions)

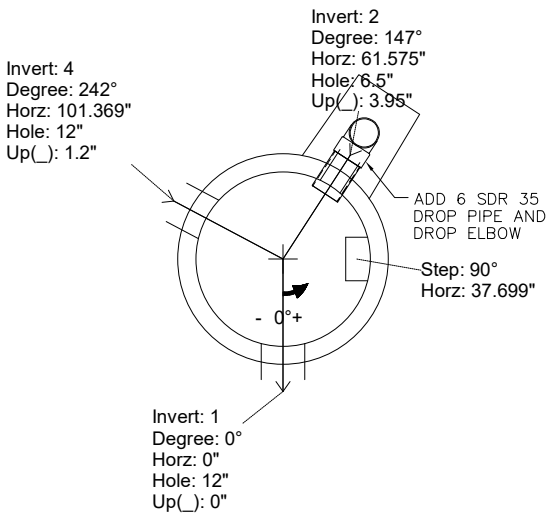

INSIDE WALL DIMENSIONS

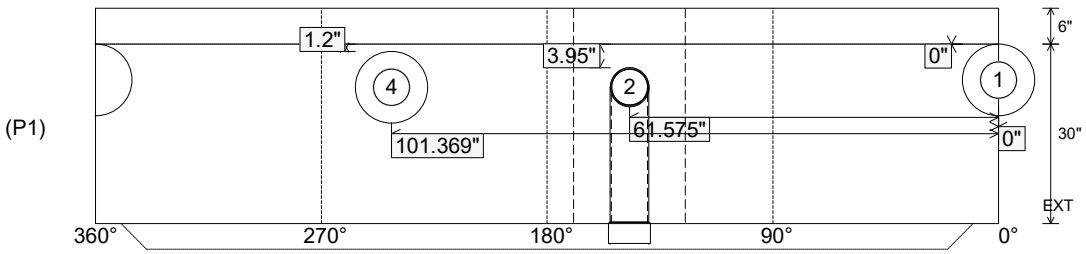

Coating (Int): Coating (Ext):	Seam Up: Tongue Seam Dn: n/a	Wall Thickness: 5" Floor Height: 6"	Height (Int): 30" Height (Ext): 36"	Weight (Net): 4866 lb Volume (Net): 1.24cu.yd

Job Name: 25-4490P1 Heartland Meadows Subdivision Job Location: Elizabethtown, KY 40165 Contractor: Kauffeld Brothers Construction	Plant: 100 7/23/2026 12:36:46 PM	Tech: Jared - A PC: Celina Goff	

Structure ID: MH 1-8 (9)

P1 MH048BAVF-D **MH BASE w/DROP Custom Ht**

P6) 24" - CASTING HEIGHT - 7"	0 lb
P5) 24" - GRADE RING - 3"	202 lb
P4) 48" - ECC CONE w/ 24" HOLE - 42"	3200 lb
P3) 48" - MH RISER - 36"	2515 lb
P2) 48" - MH RISER w/DROP - 48"	5403 lb
P1) 48" - MH BASE w/DROP Custom Ht - 30"	4866 lb
1) 48" - MH INVERT CHANNEL - FULL HEIGHT	1440 lb
1) JOINT WRAP - 0.065"x6"x50' CONSEAL CS212	0 lb
1) JOINT WRAP PRIMER - CONSEAL CS-75 (1 gal.)	0 lb
1) CASTING - HOE MC-375 F/C Sanitary	271 lb
3) 48" - Conseal CS-102 1.00" (Double)	0 lb
2) 24" - Conseal CS-102 1.00" (Double)	0 lb
2) PSX - 12-06 NYLO	16 lb
1) Drop Elbow - 6" PVC	0 lb
1) Drop Tee - 6" PVC	0 lb
~~13) MH Step ML-10-TDS-NCR - 10"~~	~~0 lb~~
Structure Total:	17914 lb

Rim: 897.51' Rim to Invert: 13.71' Slack: 1.52" Sump: 3" Step Position: 90°

Structure Notes: .
1. HOE MC-375 F/C "SANITARY" PROVIDED BY ICAST.
2. PER ASTM C478 SPECIFICATIONS.
3. CONCRETE = 4,000 PSI AT 28 DAYS.
4. REINFORCING PER ASTM A615 (GRADE 60).
- CONE (As .12)
- RISER/WALLS (As .12)
- FLOOR (As .31) #5 BARS AT 12" C.C.E.W.

INVERT CHANNEL DRAWING

Position	Elev	Angle	Ext. (cw)	Pipe	Pipe OD	Connector	Hole	Horz Size	Up (_)	Offset
Invert 1	883.8'	0°	0"	6" PVC SDR35	6.25"	PSX 12-06 NYLO	12"	12.129"	0"	0"
Invert 2	883.9'	147°	74.403"	6" PVC SDR35	6.25"	Drop Elbow 6" PVC	6.5"	6.52"	3.95"	0"
Invert 3										
Invert 4	883.9'	242°	122.487"	6" PVC SDR35	6.25"	PSX 12-06 NYLO	12"	12.129"	1.2"	0"
Invert 5										
Invert 6										
Invert 7										
Invert 8										

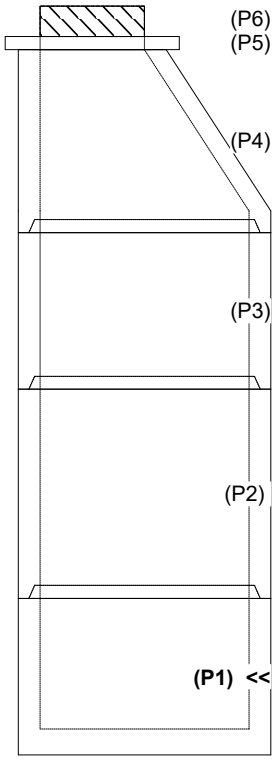

RIGHT-SIDE UP VIEW (int. dimensions)

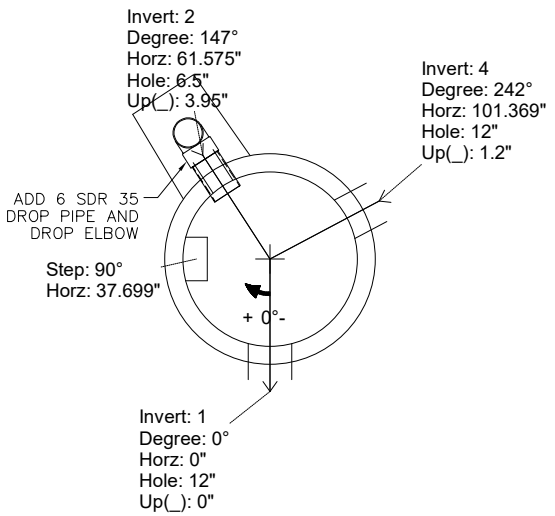

UPSIDE-DOWN VIEW (int. dimenions)

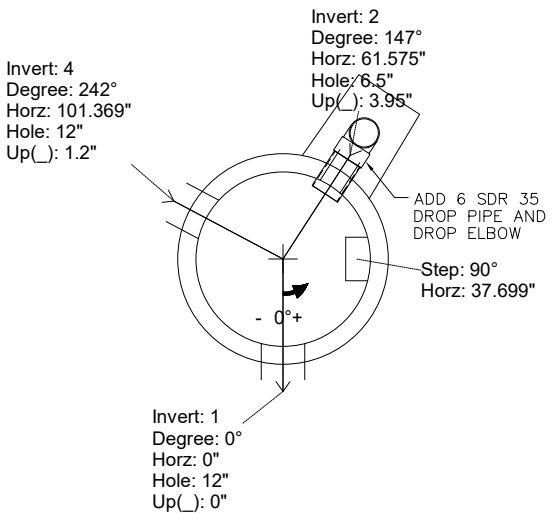

INSIDE WALL DIMENSIONS

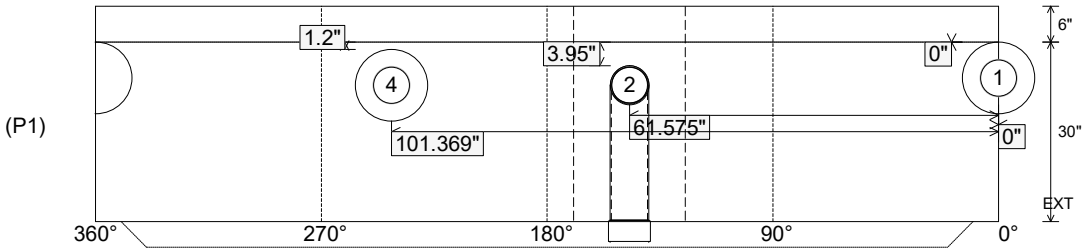

Coating (Int): Coating (Ext):	Seam Up: Tongue Seam Dn: n/a	Wall Thickness: 5" Floor Height: 6"	Height (Int): 30" Height (Ext): 36"	Weight (Net): 4866 lb Volume (Net): 1.24cu.yd

Job Name: 25-4490P1 Heartland Meadows Subdivision Job Location: Elizabethtown, KY 40165 Contractor: Kauffeld Brothers Construction	Plant: 100 7/23/2026 12:03:35 PM	Tech: Jared - A PC: Celina Goff	

Structure ID: MH 1-7 (2)

P1 MH048BA24 MH BASE

P4) 24" - CASTING HEIGHT - 7"	0 lb
P3) 48" - ECC CONE w/ 24" HOLE - 30"	2050 lb
P2) 48" - MH RISER - 24"	1677 lb
P1) 48" - MH BASE - 24"	2911 lb
1) 48" - MH INVERT CHANNEL - FULL HEIGHT	1440 lb
1) JOINT WRAP - 0.065"x6"x50' CONSEAL CS212	0 lb
1) JOINT WRAP PRIMER - CONSEAL CS-75 (1 gal.)	0 lb
1) CASTING - HOE MC-375 F/C Sanitary	271 lb
2) 48" - Conseal CS-102 1.00" (Double)	0 lb
1) 24" - Conseal CS-102 1.00" (Double)	0 lb
2) PSX - 12-08 NYLO	16 lb
6) MH Step ML-10-TDS-NCR - 10"	0 lb
Structure Total:	8365 lb

Rim: 865.25' Rim to Invert: 7.16' Slack: 2.92" Sump: 2" Step Position: 265.5°

Structure Notes: .
1. HOE MC-375 F/C "SANITARY" PROVIDED BY ICAST.
2. PER ASTM C478 SPECIFICATIONS.
3. CONCRETE = 4,000 PSI AT 28 DAYS.
4. REINFORCING PER ASTM A615 (GRADE 60).
- CONE (As .12)
- RISER/WALLS (As .12)
- FLOOR (As .31) #5 BARS AT 12" C.C.E.W.

Position	Elev	Angle	Ext. (cw)	Pipe	Pipe OD	Connector	Hole	Horz Size	Up (_)	Offset
Invert 1	858.09'	0°	0"	8" PVC SDR35	8.5"	PSX 12-08 NYLO	12"	12.129"	0"	0"
Invert 2	858.19'	171°	86.551"	8" PVC SDR35	8.5"	PSX 12-08 NYLO	12"	12.129"	1.2"	0"
Invert 3										
Invert 4										
Invert 5										
Invert 6										
Invert 7										
Invert 8										

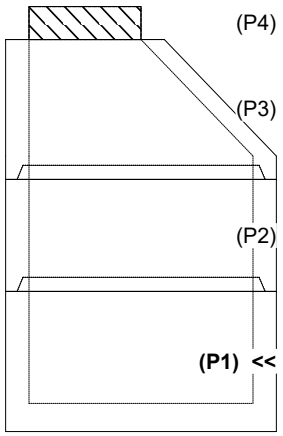

RIGHT-SIDE UP VIEW (int. dimensions)

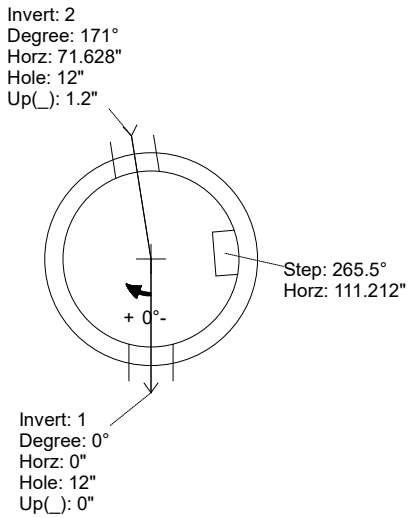

UPSIDE-DOWN VIEW (int. dimenions)

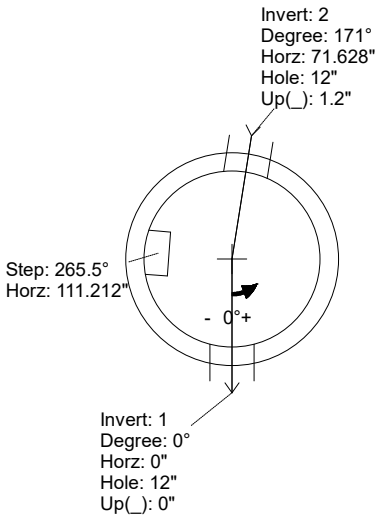

INSIDE WALL DIMENSIONS

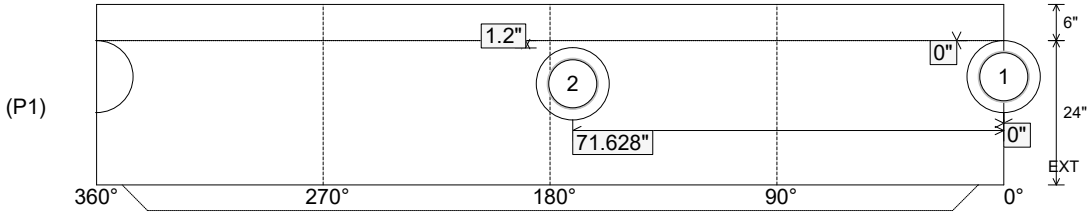

Coating (Int): Coating (Ext):	Seam Up: Tongue Seam Dn: n/a	Wall Thickness: 5" Floor Height: 6"	Height (Int): 24" Height (Ext): 30"	Weight (Net): 2911 lb Volume (Net): 0.74cu.yd

Job Name: 25-4490P1 Heartland Meadows Subdivision Job Location: Elizabethtown, KY 40165 Contractor: Kauffeld Brothers Construction	Plant: 100 7/23/2026 12:03:35 PM	Tech: Jared - A PC: Celina Goff	

Structure ID: MH 1-7 (2)

P1 MH048BA24 MH BASE

P4) 24" - CASTING HEIGHT - 7"	0 lb
P3) 48" - ECC CONE w/ 24" HOLE - 30"	2050 lb
P2) 48" - MH RISER - 24"	1677 lb
P1) 48" - MH BASE - 24"	2911 lb
1) 48" - MH INVERT CHANNEL - FULL HEIGHT	1440 lb
1) JOINT WRAP - 0.065"x6"x50' CONSEAL CS212	0 lb
1) JOINT WRAP PRIMER - CONSEAL CS-75 (1 gal.)	0 lb
1) CASTING - HOE MC-375 F/C Sanitary	271 lb
2) 48" - Conseal CS-102 1.00" (Double)	0 lb
1) 24" - Conseal CS-102 1.00" (Double)	0 lb
2) PSX - 12-08 NYLO	16 lb
6) MH Step ML-10-TDS-NCR - 10"	0 lb
Structure Total:	8365 lb

Structure Notes: .
1. HOE MC-375 F/C "SANITARY" PROVIDED BY ICAST.
2. PER ASTM C478 SPECIFICATIONS.
3. CONCRETE = 4,000 PSI AT 28 DAYS.
4. REINFORCING PER ASTM A615 (GRADE 60).
- CONE (As .12)
- RISER/WALLS (As .12)
- FLOOR (As .31) #5 BARS AT 12" C.C.E.W.

INVERT CHANNEL DRAWING

Rim: 865.25' Rim to Invert: 7.16' Slack: 2.92" Sump: 2" Step Position: 265.5°

Position	Elev	Angle	Ext. (cw)	Pipe	Pipe OD	Connector	Hole	Horz Size	Up (_)	Offset
Invert 1	858.09'	0°	0"	8" PVC SDR35	8.5"	PSX 12-08 NYLO	12"	12.129"	0"	0"
Invert 2	858.19'	171°	86.551"	8" PVC SDR35	8.5"	PSX 12-08 NYLO	12"	12.129"	1.2"	0"
Invert 3										
Invert 4										
Invert 5										
Invert 6										
Invert 7										
Invert 8										

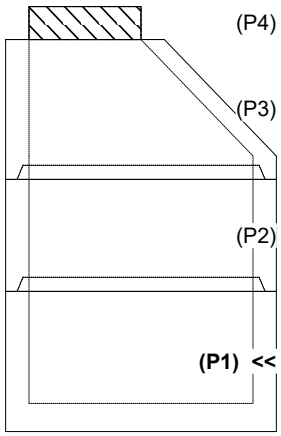

RIGHT-SIDE UP VIEW (int. dimensions)

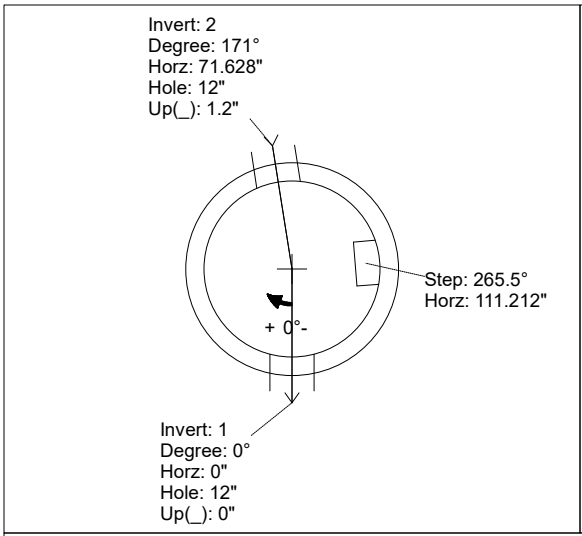

UPSIDE-DOWN VIEW (int. dimenions)

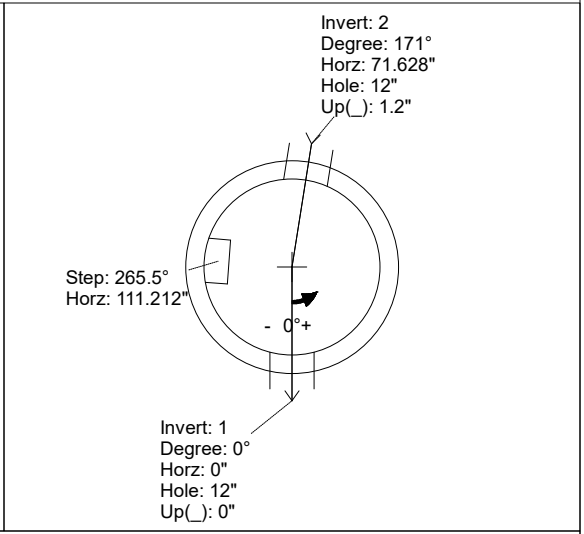

INSIDE WALL DIMENSIONS

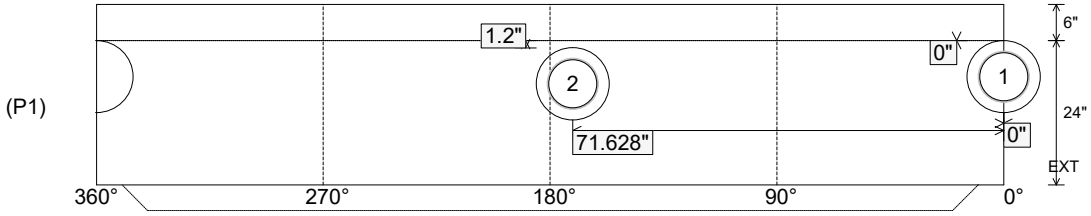

Coating (Int): Coating (Ext):	Seam Up: Tongue Seam Dn: n/a	Wall Thickness: 5" Floor Height: 6"	Height (Int): 24" Height (Ext): 30"	Weight (Net): 2911 lb Volume (Net): 0.74cu.yd

Job Name: 24-3511 Coles Ferry Section 18 & 19 Job Location: Lebanon, TN Contractor: Covenant Constructors, LLC	Plant: Beaver Dam, KY 8/4/2026 3:08:36 PM	Tech: J. Horsley PC: A. Chambers	

Structure ID: JB3

P1 MH048BAVF **MH BASE Custom Ht F/n**

P3) 24" - CASTING HEIGHT - 4"	0 lb
P2) 48" - MH FLAT TOP w/ 24" ECC Hole F/F - 7"	798 lb
P1) 48" - MH BASE Custom Ht F/n - 20"	2193 lb
1) CASTING - JBS 1072 F/C STORM	250 lb
1) 48" - Conseal CS-102 1.00"	0 lb
1) DOGHOUSE INVRTD - 26"x24"	0 lb
2) DOGHOUSE INVRTD - 22"x20.25"	0 lb
1) MH Step ML-10-TDS-NCR - 10"	0 lb
Structure Total:	3242 lb

Structure Notes: .
1. PER ASTM C478 SPECIFICATIONS.
2. CONCRETE = 4,500 PSI AT 28 DAYS.
3. NO INVERT CHANNEL.
4. CASTING BY ICAST (JBS 1072 F/C).

.
REINFORCING PER ASTM A615 (GRADE 60).
- TOP SLAB = H20 LOADING.
- WALLS (As .12)
- FLOOR (As .31) #5 BARS AT 12" C.C.E.W.

Rim: 571.95' Rim to Invert: 2.4' Slack: 0.3" Sump: 2.5" Step Position: 90°

Position	Elev	Angle	Ext. (cw)	Pipe	Pipe OD	Connector	Hole	Horz Size	Up (_)	Offset
Invert 1	569.55'	0°	0"	18" RCP B WALL	23"	DOGHOUSE INVRTD 26"x24"	26" x 24"	27.476"	0"	0"
Invert 2	569.55'	180°	91.125"	15" RCP B WALL	19.5"	DOGHOUSE INVRTD 22"x20.25"	22" x 20.25"	22.854"	0.25"	0"
Invert 3	569.55'	270°	136.625"	15" RCP B WALL	19.5"	DOGHOUSE INVRTD 22"x20.25"	22" x 20.25"	22.854"	0.25"	0"
Invert 4										
Invert 5										
Invert 6										
Invert 7										
Invert 8										

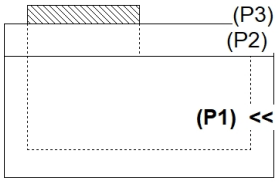

RIGHT-SIDE UP VIEW (int. dimensions)

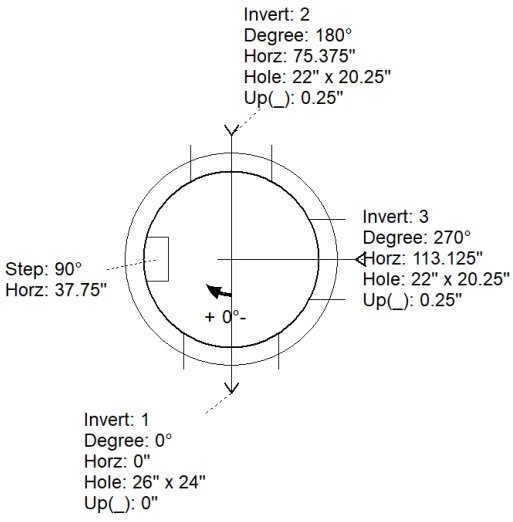

UPSIDE-DOWN VIEW (int. dimenions)

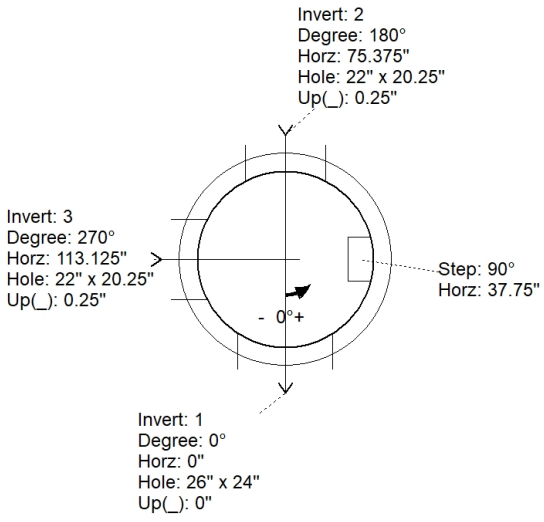

INSIDE WALL DIMENSIONS

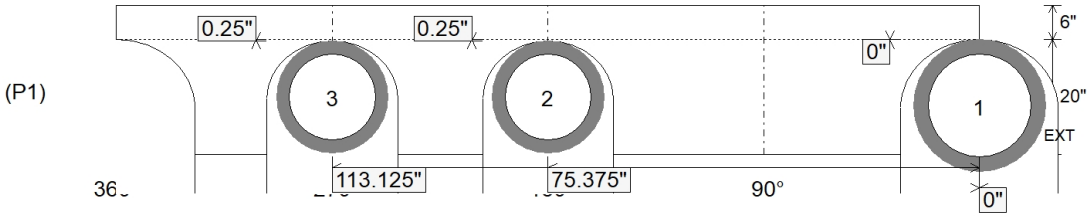

Coating (Int): Coating (Ext):	Seam Up: Flat Seam Dn: n/a	Wall Thickness: 5" Floor Height: 6"	Height (Int): 20" Height (Ext): 26"	Weight (Net): 2193 lb Volume (Net): 0.56cu.yd

Job Name: 25-3241P2 - Buck Hills Subdivision Job Location: Lawrenceburg, KY 40342 Contractor: Edmonson Plumbing & Heating Supply	Plant: 100 7/24/2026 12:43:56 PM	Tech: Jared - A PC: C. Goff	

Structure ID: MH B2

P1 MH048BAEVF **MH BASE w/FLANGE (08F/08EF)**

P3) 24" - CASTING HEIGHT - 7"	0 lb
P2) 48" - ECC CONE w/ 24" HOLE - 36"	3000 lb
P1) 48" - MH BASE w/FLANGE (08F/08EF) - 31"	4919 lb
1) JOINT WRAP PRIMER - CONSEAL CS-75 (1 gal.)	0 lb
1) JOINT WRAP - 0.065"x6"x50' CONSEAL CS212	0 lb
1) 48" - MH INVERT CHANNEL - FULL HEIGHT	1440 lb
1) CASTING - HOE MC-420 F/C Sanitary	340 lb
1) 48" - Conseal CS-102 1.00" (Double)	0 lb
1) 24" - Conseal CS-102 1.00" (Double)	0 lb
1) Quik-Lok - QL-08-C	1 lb
2) PSX - 12-08 NYLO	16 lb
Structure Total:	9716 lb

Structure Notes:
1. HOE MC-420 F/C SANITARY PROVIDED BY ICAST
2. PER ASTM C478 SPECIFICATIONS.
3. CONCRETE = 4,000 PSI AT 28 DAYS.
4. REINFORCING PER ASTM A615 (GRADE 60).
- CONE (As .12)
- RISER/WALLS (As .12)
- FLOOR (As .31) #5 BARS AT 12" C.C.E.W.

Rim: 805' Rim to Invert: 6' Slack: 0" Sump: 2" Step Position: 0°

Position	Elev	Angle	Ext. (cw)	Pipe	Pipe OD	Connector	Hole	Horz Size	Up (_)	Offset
Invert 1	799'	0°	0"	8" PVC SDR35	8.5"	Quik-Lok QL-08-C	10.75"	10.842"	0.625"	0"
Invert 2	799.1'	90°	45.553"	8" PVC SDR35	8.5"	PSX 12-08 NYLO	12"	12.129"	1.2"	0"
Invert 3	799.1'	230°	116.413"	8" PVC SDR35	8.5"	PSX 12-08 NYLO	12"	12.129"	1.2"	0"
Invert 4										
Invert 5										
Invert 6										
Invert 7										
Invert 8										

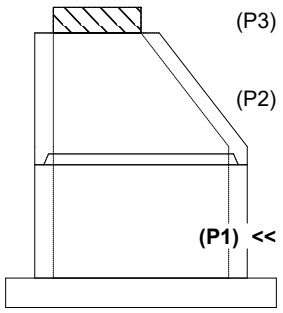

RIGHT-SIDE UP VIEW (int. dimensions)

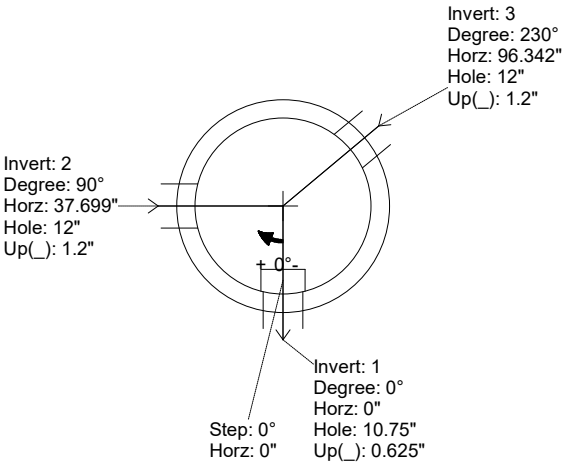

UPSIDE-DOWN VIEW (int. dimenions)

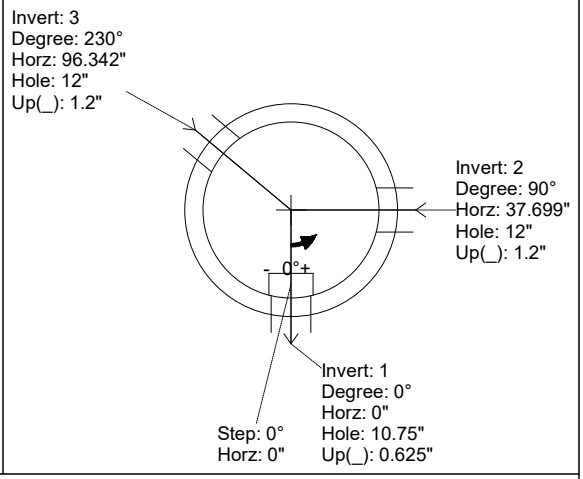

INSIDE WALL DIMENSIONS

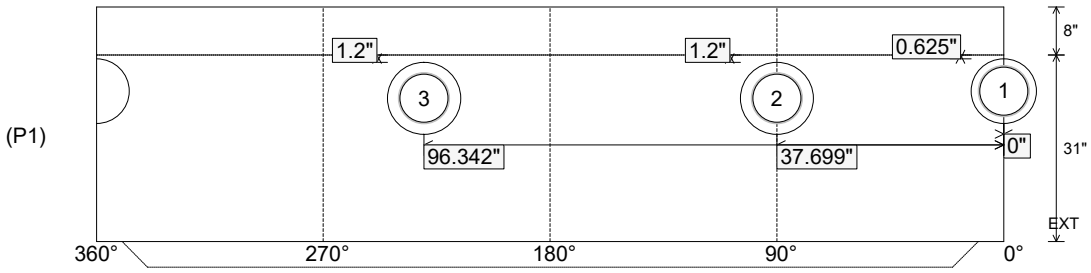

Coating (Int): Coating (Ext):	Seam Up: Tongue Seam Dn: n/a	Wall Thickness: 5" Floor Height: 8"	Height (Int): 31" Height (Ext): 39"	Weight (Net): 4919 lb Volume (Net): 1.26cu.yd

Job Name: 25-3241P2 - Buck Hills Subdivision Job Location: Lawrenceburg, KY 40342 Contractor: Edmonson Plumbing & Heating Supply	Plant: 100 7/24/2026 12:43:56 PM	Tech: Jared - A PC: C. Goff	

Structure ID: MH B2

P1 MH048BAEVF **MH BASE w/FLANGE (08F/08EF)**

P3) 24" - CASTING HEIGHT - 7"	0 lb
P2) 48" - ECC CONE w/ 24" HOLE - 36"	3000 lb
P1) 48" - MH BASE w/FLANGE (08F/08EF) - 31"	4919 lb
1) JOINT WRAP PRIMER - CONSEAL CS-75 (1 gal.)	0 lb
1) JOINT WRAP - 0.065"x6"x50' CONSEAL CS212	0 lb
1) 48" - MH INVERT CHANNEL - FULL HEIGHT	1440 lb
1) CASTING - HOE MC-420 F/C Sanitary	340 lb
1) 48" - Conseal CS-102 1.00" (Double)	0 lb
1) 24" - Conseal CS-102 1.00" (Double)	0 lb
1) Quik-Lok - QL-08-C	1 lb
2) PSX - 12-08 NYLO	16 lb
Structure Total:	9716 lb

Structure Notes:
1. HOE MC-420 F/C SANITARY PROVIDED BY ICAST
2. PER ASTM C478 SPECIFICATIONS.
3. CONCRETE = 4,000 PSI AT 28 DAYS.
4. REINFORCING PER ASTM A615 (GRADE 60).
- CONE (As .12)
- RISER/WALLS (As .12)
- FLOOR (As .31) #5 BARS AT 12" C.C.E.W.

INVERT CHANNEL DRAWING
FULL HEIGHT INVERT

Rim: 805' Rim to Invert: 6' Slack: 0" Sump: 2" Step Position: 0°

Position	Elev	Angle	Ext. (cw)	Pipe	Pipe OD	Connector	Hole	Horz Size	Up (_)	Offset
Invert 1	799'	0°	0"	8" PVC SDR35	8.5"	Quik-Lok QL-08-C	10.75"	10.842"	0.625"	0"
Invert 2	799.1'	90°	45.553"	8" PVC SDR35	8.5"	PSX 12-08 NYLO	12"	12.129"	1.2"	0"
Invert 3	799.1'	230°	116.413"	8" PVC SDR35	8.5"	PSX 12-08 NYLO	12"	12.129"	1.2"	0"
Invert 4										
Invert 5										
Invert 6										
Invert 7										
Invert 8										

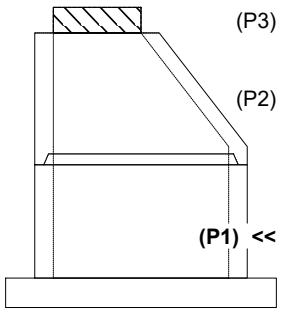

RIGHT-SIDE UP VIEW (int. dimensions)

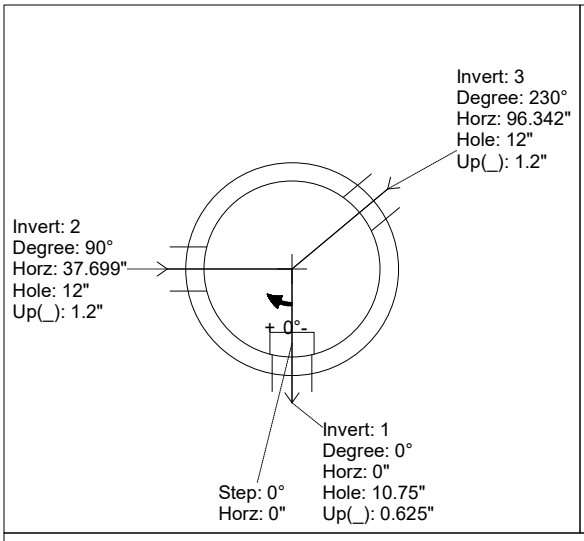

UPSIDE-DOWN VIEW (int. dimenions)

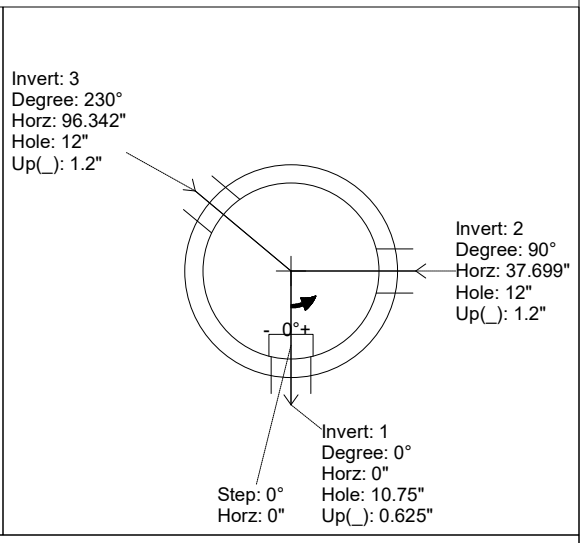

INSIDE WALL DIMENSIONS

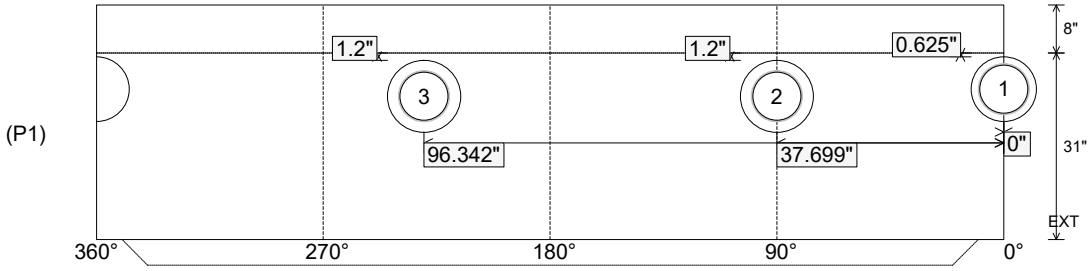

Coating (Int): Coating (Ext):	Seam Up: Tongue Seam Dn: n/a	Wall Thickness: 5" Floor Height: 8"	Height (Int): 31" Height (Ext): 39"	Weight (Net): 4919 lb Volume (Net): 1.26cu.yd

Job Name: 26-1549 Cowan St. Trunk Sewer Job Location: Nashville, TN Contractor: Garney Companies, Inc.	Plant: 100 8/5/2026 9:32:26 AM	Tech: Jared - A PC: Jay Ross Jarvis	

Structure ID: MH B4

P2 MH060R72XS MH RISER w/XYPEX SPECIAL

P7) 24" - CASTING HEIGHT - 7"	0 lb
P6) 60" - XYPEX MH FLAT TOP w/24" CC Hole - 13"	2701 lb
P5) 60" - MH RISER w/XYPEX SPECIAL - 36"	3758 lb
P4) 60" - MH RISER w/XYPEX SPECIAL - 72"	7516 lb
P3) 60" - MH RISER w/XYPEX SPECIAL - 72"	7516 lb
P2) 60" - MH RISER w/XYPEX SPECIAL - 72"	7516 lb
P1) 60" - MH BASE EF (08F/07EF) XYPEX - 70"	10274 lb
1) JOINT WRAP - 0.065"x6"x50' CONSEAL CS212	0 lb
1) JOINT WRAP PRIMER - CONSEAL CS-75 (1 gal.)	0 lb
1) ADMIXTURE XYPEX C-1000 RED	0 lb
1) 60" - MH INVERT CHANNEL w/XYPEX - FULL HEIGHT	2962 lb
1) SECONDARY POUR - EXT. FLANGE	0 lb
1) CASTING - JBS 1150 F/C SANITARY	250 lb
5) 60" - Conseal CS-102 1.00" (Double)	0 lb
1) 24" - Conseal CS-102 1.00" (Double)	0 lb
2) A-Lok - 1040	2 lb
Structure Total:	42496 lb

Rim: 414.72' Rim to Invert: 28.39' Slack: 0.68" Sump: 2" Step Position: ------

Structure Notes: .
1. JBS 1150 F/C SANITARY PROVIDED BY ICAST.
2. PER ASTM C478 SPECIFICATIONS.
3. CONCRETE = 4,000 PSI AT 28 DAYS.
4. ADMIXTURE = XYPEX C-1000 RED.
5. REINFORCING PER ASTM A615 (GRADE 60).
- TOP SLAB (As .62) #5 BARS AT 6" C.C.E.W.
- RISER/WALLS (As .18)
- FLOOR (As .31) #5 BARS AT 12" C.C.E.W.
6. DOUBLE BANDS FOR BOOTS
7. ANY REQUIRED INTEROR EPOXY COATING TO BE SUPPLIED & INSTALLED BY OTHERS
8. **NO STEPS**

Position	Elev	Angle	Ext. (cw)	Pipe	Pipe OD	Connector	Hole	Horz Size	Up (_)	Offset
Invert 1										
Invert 2										
Invert 3										
Invert 4										
Invert 5										
Invert 6										
Invert 7										
Invert 8										

RIGHT-SIDE UP VIEW (int. dimensions)

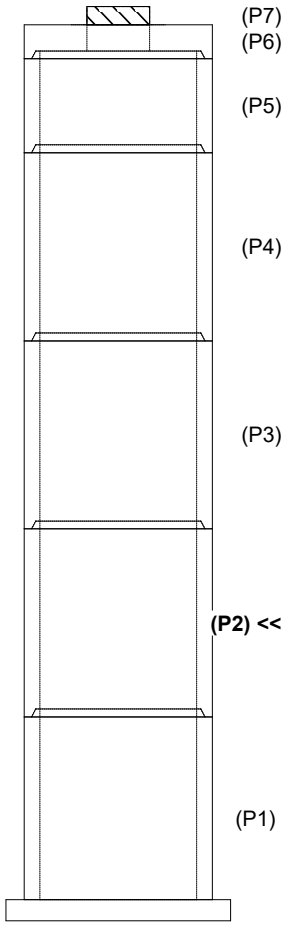

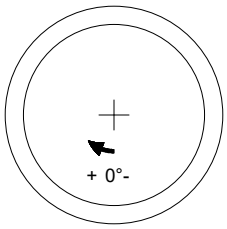

INSIDE WALL DIMENSIONS

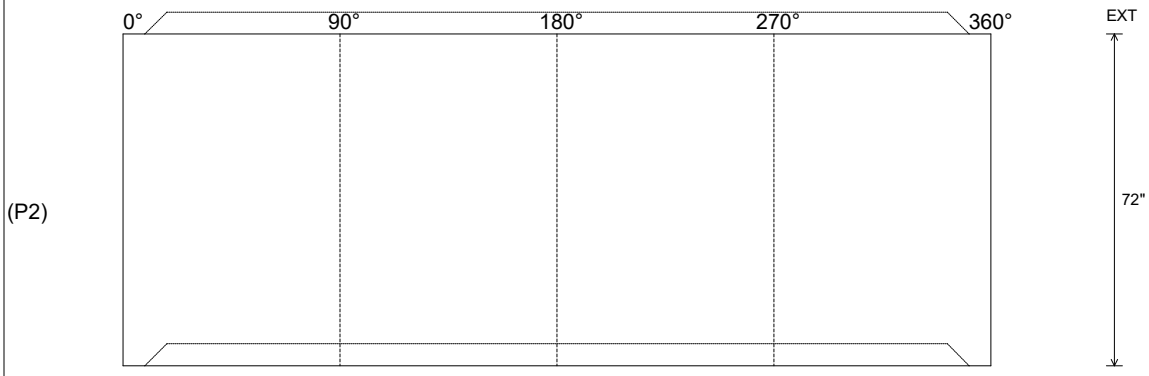

Coating (Int): Coating (Ext):	Seam Up: Tongue Seam Dn: Groove	Wall Thickness: 6" Floor Height: 0"	Height (Int): 72" Height (Ext): 72"	Weight (Net): 7516 lb Volume (Net): 1.92cu.yd

Job Name: 26-1394 - TMMI Ryder Lift Station Job Location: Princeton, IN Contractor: Koberstein Contracting, Inc.	Plant: 100 7/16/2026 2:29:00 PM	Tech: Jared - A PC: A. Chambers	

Structure ID: 5 MV (2)

P3 MH060LD13S MH FLAT TOP w/37"x36" Hatch F/G

P4) 37" x 36" - HATCH (CAST FLUSH) - 3"	0 lb
P3) 60" - MH FLAT TOP w/37"x36" Hatch F/G - 13"	2305 lb
P2) 60" - MH RISER T/G - 54"	5637 lb
P1) 60" - MH BASE w/FLANGE (08F/08EF) T/n - 41"	8287 lb
1) JOINT WRAP PRIMER - CONSEAL CS-75 (1 gal.)	0 lb
1) JOINT WRAP - 0.065"x6"x50' CONSEAL CS212	0 lb
1) This Structure Includes a Cast-in Item - 37" x 36" Hatch (Supplied by Others)	0 lb
1) SECONDARY POUR - Extended Base Flange	0 lb
2) 60" - Conseal CS-102 1.00" (Double)	0 lb
3) PSX - 8QRS-S NYLO	20 lb
Structure Total:	16249 lb

Structure Notes:

1. PER ASTM C-478 SPECIFICATIONS
2. CONCRETE: 4,000 PSI AT 28 DAYS
3. REINFORCEMENT: #5 BAR @ 6" C.C. E.W. (GRADE 60) - 2" MIN. REBAR CLEARANCE (TYP)
4. USF FABRICATION 37" X 36" (36" X 36" CLEAR OPENING) HATCH SUPPLIED BY OTHERS - TO BE CAST INTO FLAT LID
5. LIFTERS: 4 EA. 5CA14 CONAC A-ANCHORS FOR PLANT & FIELD HANDLING - INSTALLED AS SHOWN
6. TOP SURFACE TO RECEIVE LIGHT BRUSH FINISH

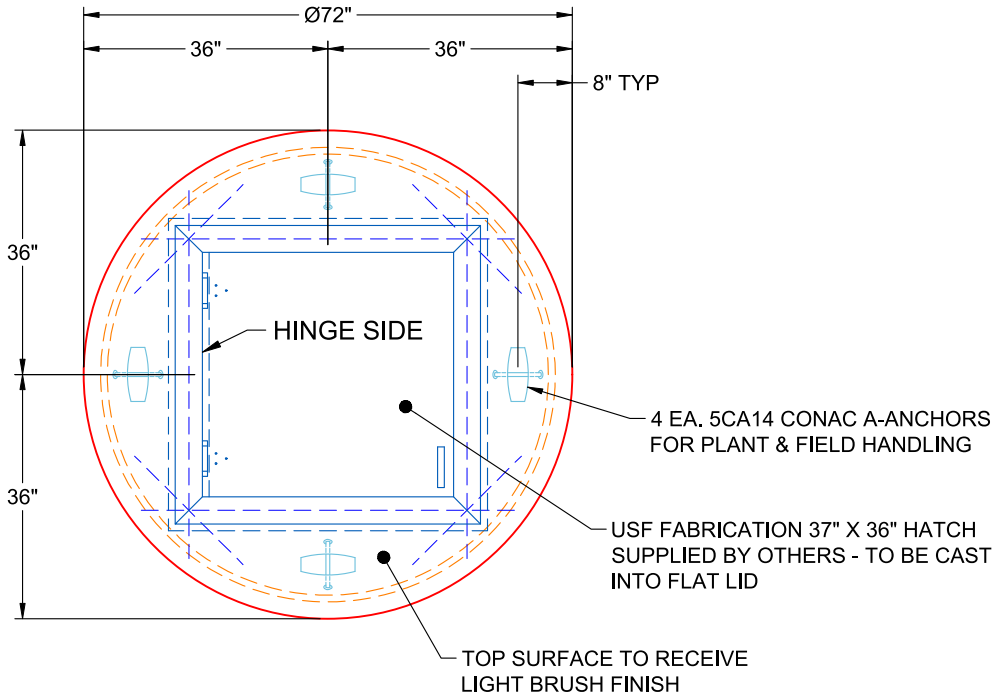

PLAN VIEW
(RIGHT SIDE UP)

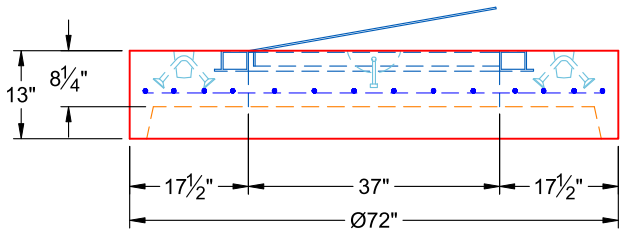

FRONT VIEW
(RIGHT SIDE UP)

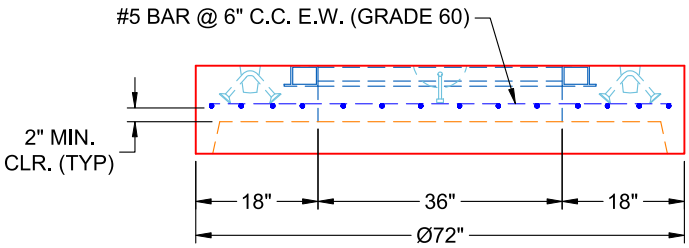

SIDE VIEW
(RIGHT SIDE UP)

Coating (Int): Coating (Ext):	Seam Up: Flat Seam Dn: Groove	Wall Thickness: 6"	Height (Ext): 13"	Weight (Net): 2305 lb Volume (Net): 0.59cu.yd

Job Number:

26-1394

Job Name:

TMMI Ryder Lift Station

Structure:

5 MV (2)

Note:

USF Fabrication 37” x 36” Hatch Supplied By Others To Be Cast Into Flat Lid

Job Name: 25-4547 - WWTP Improvements & Hydraulic Expansion Job Location: Shepherdsville, KY Contractor: Pace Contracting, LLC	Plant: 100 6/4/2026 5:54:53 PM	Tech: Jared - F PC: J Jarvis	

Structure ID: WAS VAULT 2

P2 MH060LD13S **MH FLAT TOP w/36"x36" Hatch F/G**

P3) 36" x 36" - CASTING HEIGHT - 0"	0 lb
P2) 60" - MH FLAT TOP w/36"x36" Hatch F/G - 13"	2132 lb
P1) 60" - MH BASE Custom Ht T/n - 59"	8842 lb
1) HATCH (Alum.) - HALLIDAY W1S 36"x36"	78 lb
1) 60" - Conseal CS-102 1.00" (Double)	0 lb
1) 36" x 36" - Conseal CS-102 1.00" (Double)	0 lb
2) PSX - 8QRS DD	13 lb
Structure Total:	11065 lb

Structure Notes: .
1. PER ASTM C478 SPECIFICATIONS.
2. CONCRETE = 4,000 PSI AT 28 DAYS.
3. HATCH SUPPLIED BY I-CAST (HALLIDAY W1S 36"X36")
.
REINFORCING PER ASTM A615 (GRADE 60).
- TOP SLAB (As .62) #5 BARS AT 6" C.C.E.W.
- RISER/WALLS (As .18)
- FLOOR (As .31) #5 BARS AT 12" C.C.E.W.

NOTES:
1. PER ASTM C-478 LATEST REVISION
2. CONCRETE: 4,000 PSI AT 28 DAYS.
3. REINFORCEMENT:
   TOP SLAB – #5 BAR @ 6" C.C.E.W.
   PER ASTM A615 (GRADE 60)
4. JOINT SEALANT – 1" CS-102-DOUBLE
5. HATCH: W1S 36"X36" HATCH IS PROVIDED BY ICAST.
6. HATCH TO BE CAST INTO TOP SLAB.

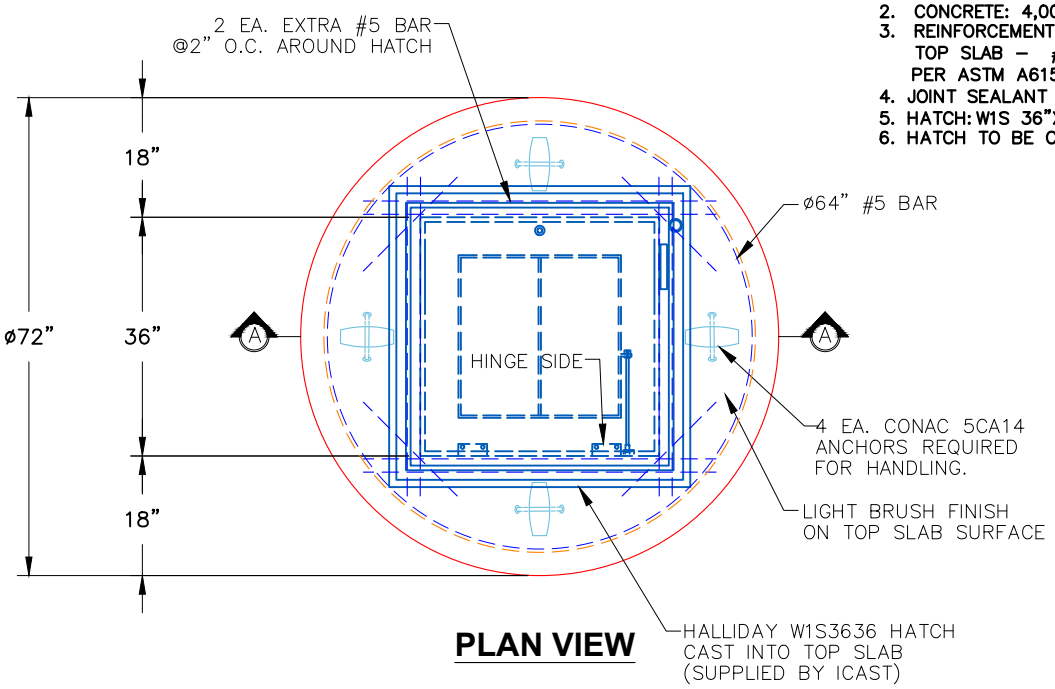

PLAN VIEW

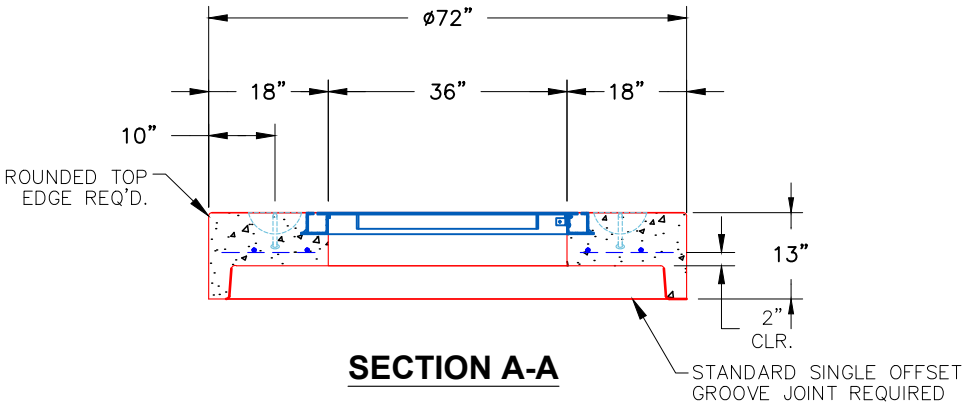

SECTION A-A

Coating (Int): Coating (Ext):	Seam Up: Flat Seam Dn: Groove	Wall Thickness: 6"	Height (Ext): 13"	Weight (Net): 2132 lb Volume (Net): 0.55cu.yd

Job Name: 25-3118 - W6 Ph 2-C Force Main Improvements Job Location: Fort Mitchell, KY 41017 Contractor: Lykins Contracting	Plant: 100 3/20/2026 1:22:18 PM	Tech: J. Horsley - A PC: Celina Goff	

Structure ID: 2301576

P1 MH060BAVF **MH BASE Custom Ht T/n**

P3) 24" - CASTING HEIGHT - 7"	0 lb
P2) 60" - MH FLAT TOP w/ 24" ECC Hole F/G - 13"	2869 lb
P1) 60" - MH BASE Custom Ht T/n - 58"	8601 lb
1) 60" - MH INVERT CHANNEL - FULL HEIGHT	2692 lb
1) 60" - Conseal CS-102 1.00" (Double)	0 lb
1) Kor-N-Seal2 - S206-18L	6 lb
1) PSX - 12-08 NYLO	8 lb
5) MH Step ML-10-TDS-NCR - 10"	0 lb
Structure Total:	14176 lb

Structure Notes:
1. PER ASTM C-478 SPECIFICATIONS
2. CONCRETE: 4,000 PSI AT 28 DAYS
3. REINFORCEMENT:
   - WALLS: PER ASTM A615 - DOUBLE MAT
   - FLOOR: #5 BAR @ 12" C.C. E.W. (GRADE 60) - 2" MIN. REBAR CLEARANCE (TYP)
4. INVERT CHANNEL REQUIRED
5. STEPS AT 270 DEGREES
6. 7" CASTING SUPPLIED BY OTHERS

Rim: 737.35' Rim to Invert: 6.46' Slack: 1.52" Sump: 2" Step Position: 270°

Position	Elev	Angle	Ext. (cw)	Pipe	Pipe OD	Connector	Hole	Horz Size	Up (_)	Offset
Invert 1	730.89'	0°	0"	15" PVC SDR35	15.3"	Kor-N-Seal2 S206-18L	18"	18.282"	0.5"	0"
Invert 2	731.03'	92°	57.75"	8" PVC SDR35	8.5"	PSX 12-08 NYLO	12"	12.081"	1.625"	0"
Invert 3										
Invert 4										
Invert 5										
Invert 6										
Invert 7										
Invert 8										

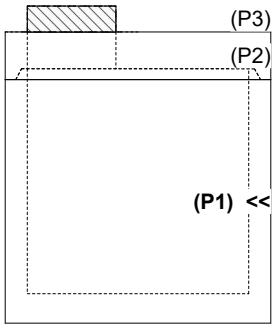

RIGHT-SIDE UP VIEW (int. dimensions)

UPSIDE-DOWN VIEW (int. dimenions)

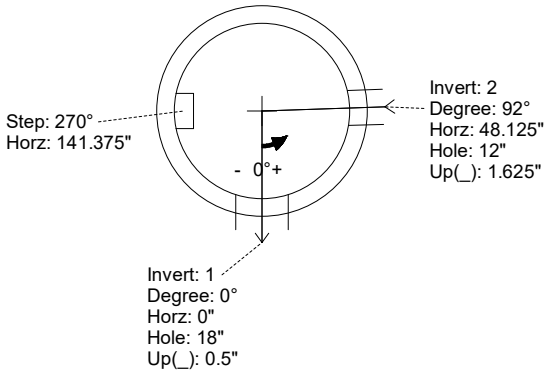

INSIDE WALL DIMENSIONS

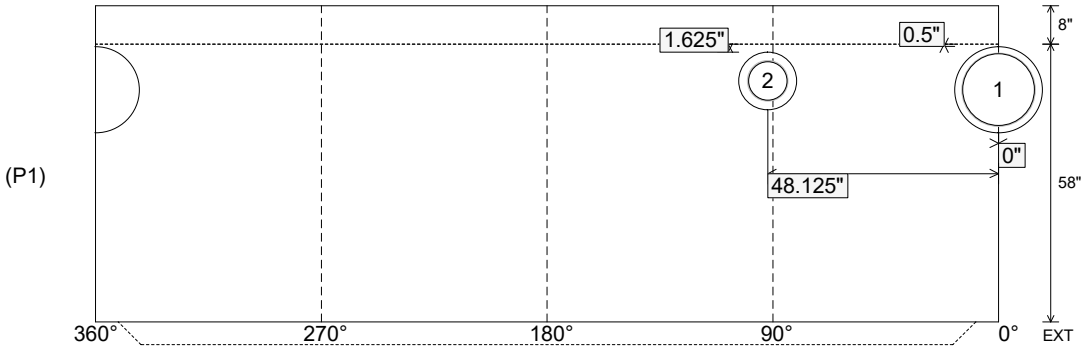

Coating (Int): Coating (Ext):	Seam Up: Tongue Seam Dn: n/a	Wall Thickness: 6" Floor Height: 8"	Height (Int): 58" Height (Ext): 66"	Weight (Net): 8601 lb Volume (Net): 2.2cu.yd

Job Name: 25-3118 - W6 Ph 2-C Force Main Improvements Job Location: Fort Mitchell, KY 41017 Contractor: Lykins Contracting	Plant: 100 3/20/2026 1:22:18 PM	Tech: J. Horsley - A PC: Celina Goff	

Structure ID: 2301576

P1 MH060BAVF **MH BASE Custom Ht T/n**

P3) 24" - CASTING HEIGHT - 7"	0 lb
P2) 60" - MH FLAT TOP w/ 24" ECC Hole F/G - 13"	2869 lb
P1) 60" - MH BASE Custom Ht T/n - 58"	8601 lb
1) 60" - MH INVERT CHANNEL - FULL HEIGHT	2692 lb
1) 60" - Conseal CS-102 1.00" (Double)	0 lb
1) Kor-N-Seal2 - S206-18L	6 lb
1) PSX - 12-08 NYLO	8 lb
5) MH Step ML-10-TDS-NCR - 10"	0 lb
Structure Total:	14176 lb

Structure Notes:
1. PER ASTM C-478 SPECIFICATIONS
2. CONCRETE: 4,000 PSI AT 28 DAYS
3. REINFORCEMENT:
   - WALLS: PER ASTM A615 - DOUBLE MAT
   - FLOOR: #5 BAR @ 12" C.C. E.W. (GRADE 60) - 2" MIN. REBAR CLEARANCE (TYP)
4. INVERT CHANNEL REQUIRED
5. STEPS AT 270 DEGREES
6. 7" CASTING SUPPLIED BY OTHERS

Rim: 737.35' Rim to Invert: 6.46' Slack: 1.52" Sump: 2" Step Position: 270°

Position	Elev	Angle	Ext. (cw)	Pipe	Pipe OD	Connector	Hole	Horz Size	Up (_)	Offset
Invert 1	730.89'	0°	0"	15" PVC SDR35	15.3"	Kor-N-Seal2 S206-18L	18"	18.282"	0.5"	0"
Invert 2	731.03'	92°	57.75"	8" PVC SDR35	8.5"	PSX 12-08 NYLO	12"	12.081"	1.625"	0"
Invert 3										
Invert 4										
Invert 5										
Invert 6										
Invert 7										
Invert 8										

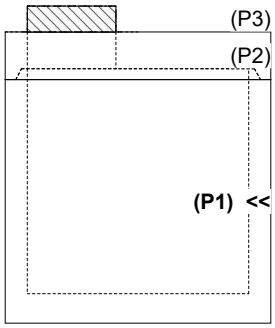

RIGHT-SIDE UP VIEW (int. dimensions)

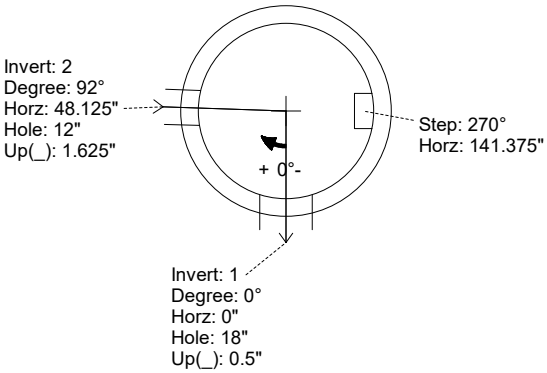

UPSIDE-DOWN VIEW (int. dimenions)

INVERT CHANNEL DRAWING

INSIDE WALL DIMENSIONS

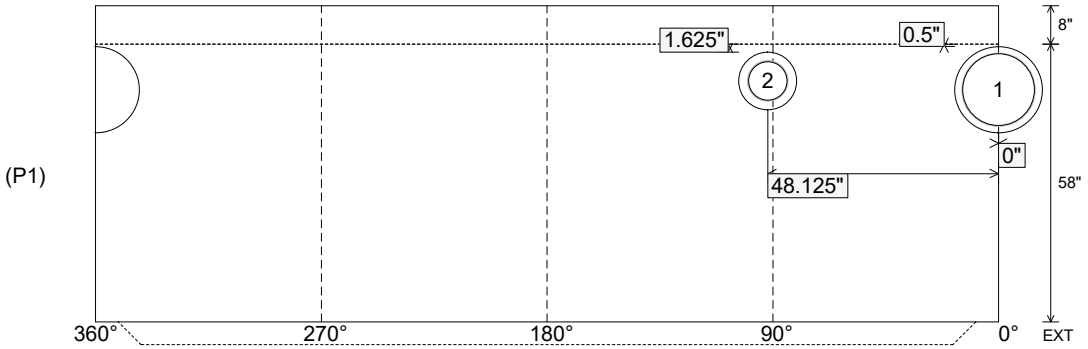

Coating (Int): Coating (Ext):	Seam Up: Tongue Seam Dn: n/a	Wall Thickness: 6" Floor Height: 8"	Height (Int): 58" Height (Ext): 66"	Weight (Net): 8601 lb Volume (Net): 2.2cu.yd

Job Name: 25-3118 - W6 Ph 2-C Force Main Improvements Job Location: Fort Mitchell, KY 41017 Contractor: Lykins Contracting	Plant: 100 3/20/2026 1:22:17 PM	Tech: J. Horsley - A PC: Celina Goff	

Structure ID: 2301575

P1 MH060BA48 MH BASE T/n

P4) 24" - CASTING HEIGHT - 7"	0 lb
P3) 60" - MH FLAT TOP w/ 24" ECC Hole F/G - 13"	2869 lb
P2) 60" - MH RISER T/G - 48"	5011 lb
P1) 60" - MH BASE T/n - 48"	7427 lb
1) 60" - MH INVERT CHANNEL - FULL HEIGHT	2692 lb
2) 60" - Conseal CS-102 1.00" (Double)	0 lb
2) Kor-N-Seal2 - S206-18L	12 lb
1) PSX - 12-08 NYLO	8 lb
8) MH Step ML-10-TDS-NCR - 10"	0 lb
Structure Total:	18019 lb

Structure Notes:
1. PER ASTM C-478 SPECIFICATIONS
2. CONCRETE: 4,000 PSI AT 28 DAYS
3. REINFORCEMENT:
   - WALLS: PER ASTM A615 - DOUBLE MAT
   - FLOOR: #5 BAR @ 12" C.C. E.W. (GRADE 60) - 2" MIN. REBAR CLEARANCE (TYP)
4. INVERT CHANNEL REQUIRED
5. STEPS AT 270 DEGREES
6. 7" CASTING SUPPLIED BY OTHERS

Rim: 738.89' Rim to Invert: 9.74' Slack: 2.88" Sump: 2" Step Position: 270°

Position	Elev	Angle	Ext. (cw)	Pipe	Pipe OD	Connector	Hole	Horz Size	Up (_)	Offset
Invert 1	729.15'	0°	0"	15" PVC SDR35	15.3"	Kor-N-Seal2 S206-18L	18"	18.282"	0.5"	0"
Invert 2	731.14'	103°	64.75"	8" PVC SDR35	8.5"	PSX 12-08 NYLO	12"	12.081"	23.875"	0"
Invert 3	729.29'	190°	119.375"	15" PVC SDR35	15.3"	Kor-N-Seal2 S206-18L	18"	18.282"	2.125"	0"
Invert 4										
Invert 5										
Invert 6										
Invert 7										
Invert 8										

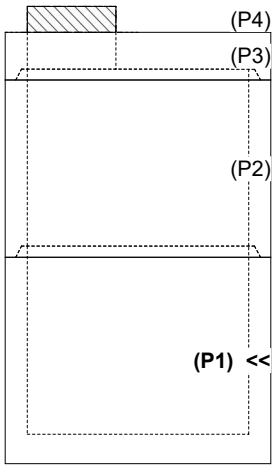

RIGHT-SIDE UP VIEW (int. dimensions)

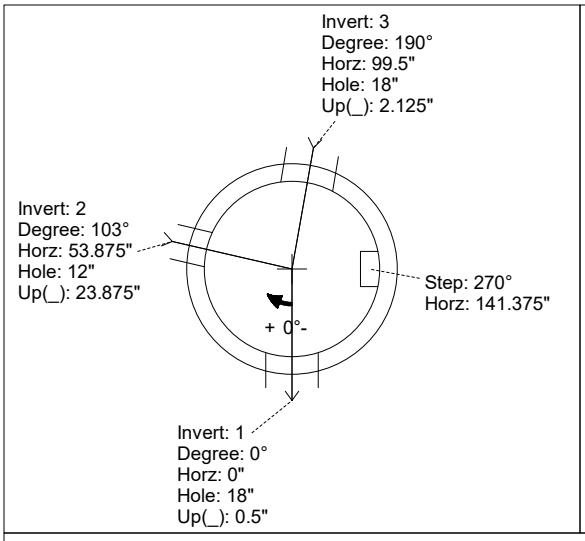

UPSIDE-DOWN VIEW (int. dimenions)

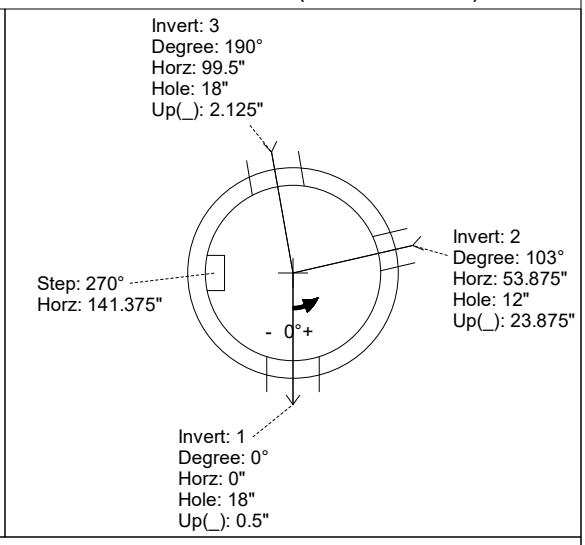

INSIDE WALL DIMENSIONS

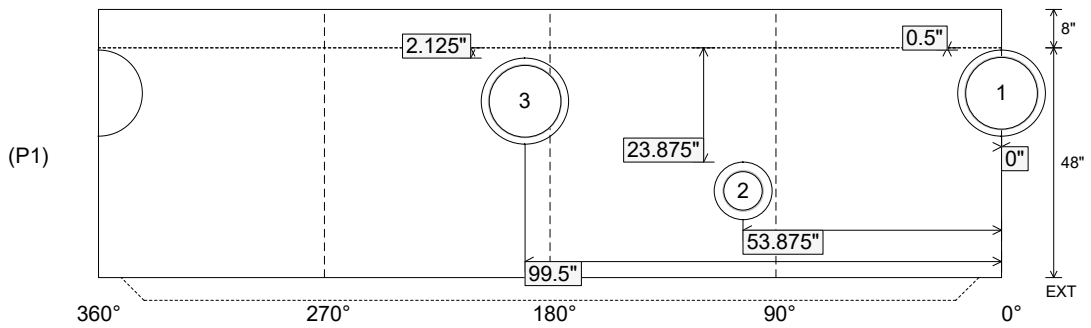

Coating (Int): Coating (Ext):	Seam Up: Tongue Seam Dn: n/a	Wall Thickness: 6" Floor Height: 8"	Height (Int): 48" Height (Ext): 56"	Weight (Net): 7427 lb Volume (Net): 1.9cu.yd

Job Name: 25-3118 - W6 Ph 2-C Force Main Improvements Job Location: Fort Mitchell, KY 41017 Contractor: Lykins Contracting	Plant: 100 3/20/2026 1:22:17 PM	Tech: J. Horsley - A PC: Celina Goff	

Structure ID: 2301575

P1 MH060BA48 MH BASE T/n

P4) 24" - CASTING HEIGHT - 7"	0 lb
P3) 60" - MH FLAT TOP w/ 24" ECC Hole F/G - 13"	2869 lb
P2) 60" - MH RISER T/G - 48"	5011 lb
P1) 60" - MH BASE T/n - 48"	7427 lb
1) 60" - MH INVERT CHANNEL - FULL HEIGHT	2692 lb
2) 60" - Conseal CS-102 1.00" (Double)	0 lb
2) Kor-N-Seal2 - S206-18L	12 lb
1) PSX - 12-08 NYLO	8 lb
8) MH Step ML-10-TDS-NCR - 10"	0 lb
Structure Total:	18019 lb

Structure Notes:
1. PER ASTM C-478 SPECIFICATIONS
2. CONCRETE: 4,000 PSI AT 28 DAYS
3. REINFORCEMENT:
   - WALLS: PER ASTM A615 - DOUBLE MAT
   - FLOOR: #5 BAR @ 12" C.C. E.W. (GRADE 60) - 2" MIN. REBAR CLEARANCE (TYP)
4. INVERT CHANNEL REQUIRED
5. STEPS AT 270 DEGREES
6. 7" CASTING SUPPLIED BY OTHERS

Rim: 738.89' Rim to Invert: 9.74' Slack: 2.88" Sump: 2" Step Position: 270°

Position	Elev	Angle	Ext. (cw)	Pipe	Pipe OD	Connector	Hole	Horz Size	Up (_)	Offset
Invert 1	729.15'	0°	0"	15" PVC SDR35	15.3"	Kor-N-Seal2 S206-18L	18"	18.282"	0.5"	0"
Invert 2	731.14'	103°	64.75"	8" PVC SDR35	8.5"	PSX 12-08 NYLO	12"	12.081"	23.875"	0"
Invert 3	729.29'	190°	119.375"	15" PVC SDR35	15.3"	Kor-N-Seal2 S206-18L	18"	18.282"	2.125"	0"
Invert 4										
Invert 5										
Invert 6										
Invert 7										
Invert 8										

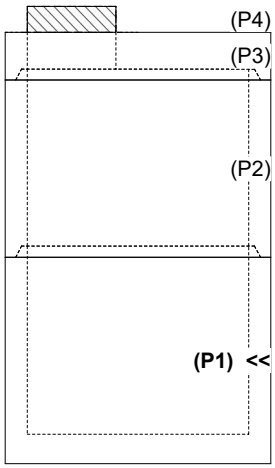

RIGHT-SIDE UP VIEW (int. dimensions)

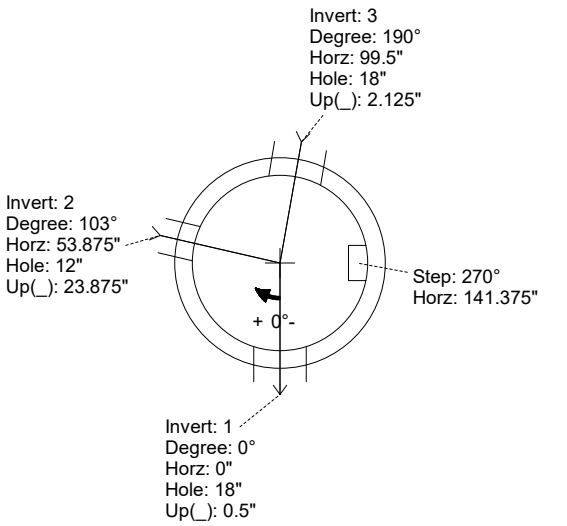

UPSIDE-DOWN VIEW (int. dimenions)

INVERT CHANNEL DRAWING

INSIDE WALL DIMENSIONS

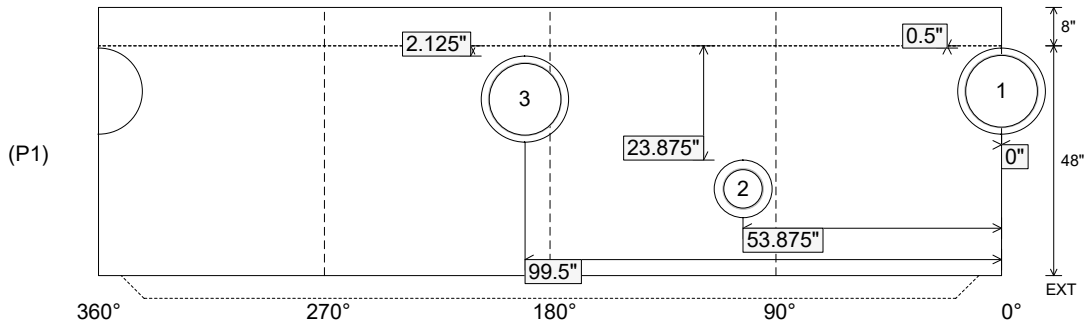

Coating (Int): Coating (Ext):	Seam Up: Tongue Seam Dn: n/a	Wall Thickness: 6" Floor Height: 8"	Height (Int): 48" Height (Ext): 56"	Weight (Net): 7427 lb Volume (Net): 1.9cu.yd

Job Name: 25-4279 - KYTC Christian Co (251031) Job Location: Hopkinsville, KY Contractor: CITCO Water	Plant: 100 5/20/2026 8:47:26 AM	Tech: Jared- F PC: C. Goff	

Structure ID: MM

P2 CTS-CDARED CB FLAT TOP 8"W w/2 HATCHES w/ConBlock-CDA Red

P3) 36" x 36" - HATCH (CAST FLUSH) - 0"	100 lb
P2) 72" x 192" - CB FLAT TOP 8"W w/2 HATCHES w/ConBlock-CDA Red - 8"	10813 lb
P1) 72" x 192" - BOX BASE 8inW, 8inF, Variable Ht w/ConBlock-CDA Red - 72"	39249 lb
1) JOINT WRAP - 0.065"x6"x50' CONSEAL CS212	0 lb
1) JOINT WRAP PRIMER - CONSEAL CS-75 (1 gal.)	0 lb
1) ADMIXTURE CONBLOCK CDA RED	0 lb
1) SECONDARY POUR - WALLS	0 lb
1) 36" x 36" - SGL 1"x14.5' Butyl (2x)	0 lb
2) Hole - 10	0 lb
Structure Total:	50162 lb

Structure Notes:
1. PER ASTM C913 SPECIFICATIONS.
2. CONCRETE = 4,000 PSI AT 28 DAYS.
3. ADMIXTURE = CONBLOCK CDA RED
4. 30"x30" & 36"x36" ALUMINUM HATCHES SUPPLIED BY OTHERS & CAST IN TOP SLAB BY ICAST.

REINFORCING PER ASTM A615 (GRADE 60).
- TOP SLAB (As .62) #5 BARS AT 6" C.C.E.W.
- WALLS (As .31) #5 BARS AT 8" C.C.E.W.
- FLOOR (As .31) #5 BARS AT 8" C.C.E.W.

GENERAL NOTES:
1. MANUFACTURED TO ASTM C-913 (LATEST REVISION).
2. CONCRETE: 4,000 PSI AT 28 DAYS.
3. REINFORCING: #5 BAR @ 6" E.W. O.C. (GRADE 60).
4. HATCH: 30"X30" & 36"X36" ALUMINUM HATCHES SUPPLIED BY OTHERS & CAST IN TOP SLAB BY ICAST
5. HATCH TO BE CAST INTO TOP OF LID.
6. ALL SECTION REQUIRE CONBLOCK CDA RED ADMIXTURE

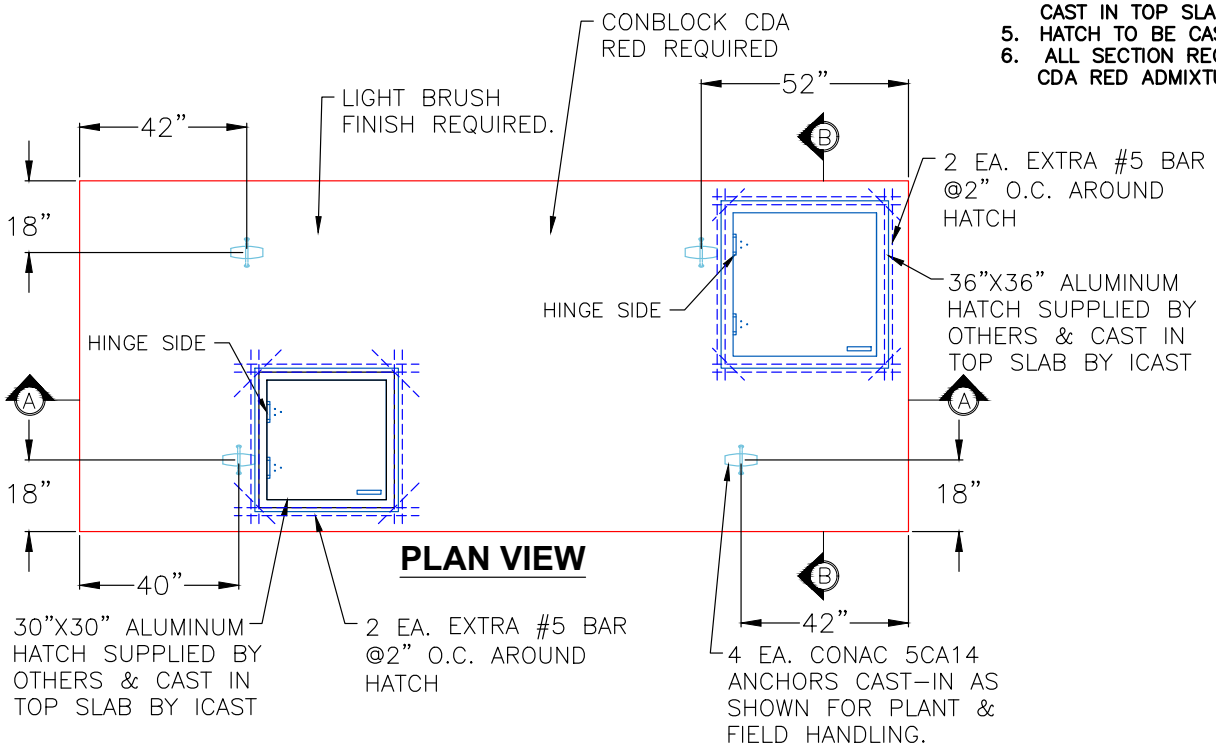

PLAN VIEW

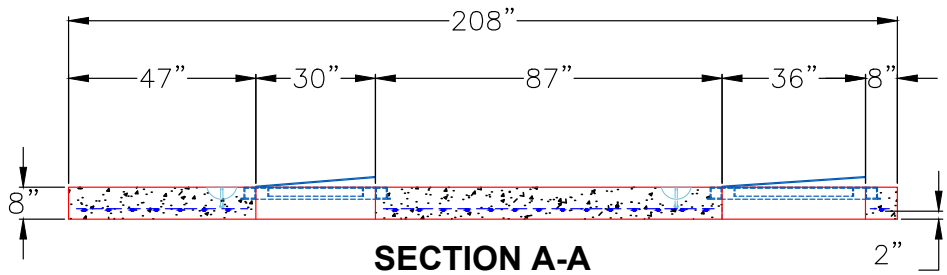

SECTION A-A
(RIGHT-SIDE-UP VIEW)

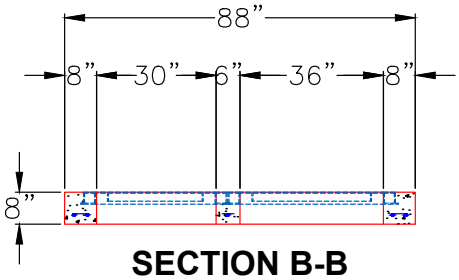

SECTION B-B
(RIGHT-SIDE-UP VIEW)

Coating (Int): Coating (Ext):	Seam Up: Flat Seam Dn: Flat	Wall Thickness: 8"	Height (Ext): 8"	Weight (Net): 10813 lb Volume (Net): 2.76cu.yd

Job Name: 25-4547 - WWTP Improvements & Hydraulic Expansion Job Location: Shepherdsville, KY Contractor: Pace Contracting, LLC	Plant: 100 7/31/2026 8:06:18 AM	Tech: Jared - F PC: J Jarvis	

Structure ID: MH-39-01A

P4 MH072TS15-48ECC **MH Transition Slab 48" Hole**

P7) 24" - CASTING HEIGHT - 7"	0 lb
P6) 48" - ECC CONE w/ 24" HOLE - 30"	2050 lb
P5) 48" - MH RISER - 24"	1677 lb
P4) 72" - MH Transition Slab 48" Hole - 15"	3864 lb
P3) 72" - MH RISER Custom Ht - 61"	8666 lb
P2) 72" - MH RISER - 72"	9541 lb
P1) 72" - P.I.P. BY OTHERS - BTM SLAB - 0"	0 lb
1) Chimney Seal - Cretex Chimney Seal	10 lb
1) JOINT WRAP - 0.065"x6"x50' CONSEAL CS212	0 lb
1) JOINT WRAP PRIMER - CONSEAL CS-75 (1 gal.)	0 lb
1) CASTING - HOE MC-375-WT F/C Sanitary	271 lb
3) 72" - Conseal CS-102 1.00" (Double)	0 lb
2) 48" - Conseal CS-102 1.00" (Double)	0 lb
1) 24" - Conseal CS-102 1.00" (Double)	0 lb
2) DOGHOUSE - 28"x30"	0 lb
1) Kor-N-Seal2 - S206-22	6 lb
12) MH Step ML-10-TDS-NCR - 10"	0 lb
Structure Total:	26086 lb

Structure Notes: .
1. PER ASTM C478 SPECIFICATIONS.
2. CONCRETE = 4,000 PSI AT 28 DAYS.
3. CASTING SUPPLIED BY I-CAST (HOE MC-375-WT F/C SANITARY).
4. INTERNAL DROP INLET SUPPLIED BY OTHERS.
.
REINFORCING PER ASTM A615 (GRADE 60).
- CONE (As .12)
- RISER/WALLS (As .12)
- TRANS.SLAB AS SHOWN BELOW.
- RISER/WALLS (As .18)

NOTES:
1. MANUFACTURED TO ASTM C-478 (LATEST REVISION).
2. CONCRETE: 4,000 PSI AT 28 DAYS.
3. REINFORCING: #4 & #5 BAR AS SHOWN (GRADE 60).
4. TONGUE REQUIRED OFFSET FOR 48"ø COMPONENTS.

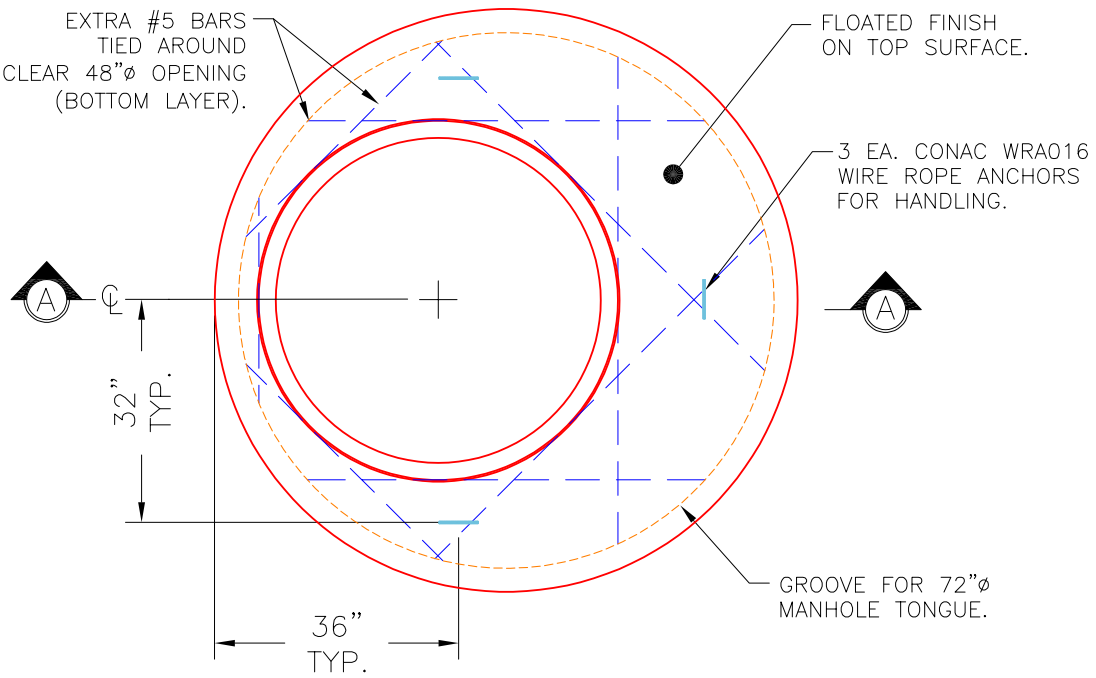

PLAN VIEW

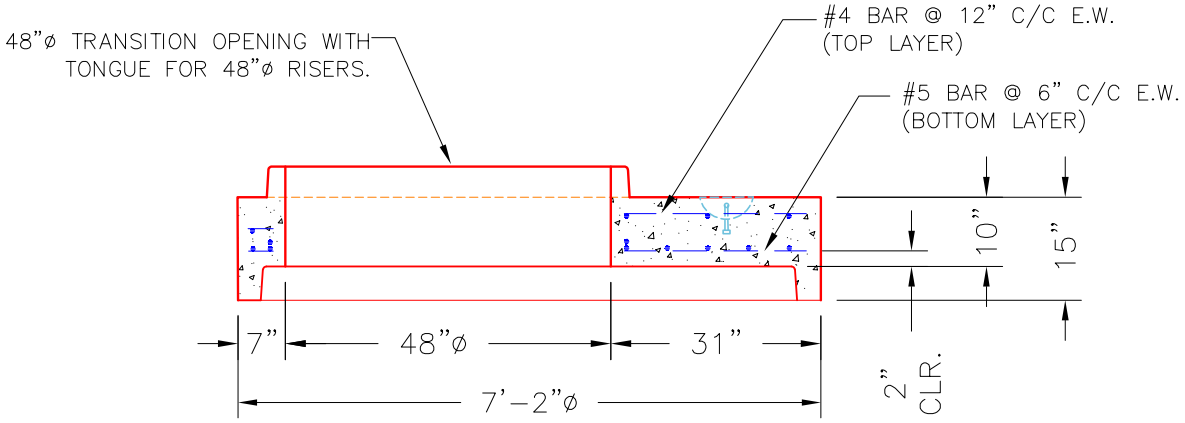

SECTION A-A

Coating (Int): Coating (Ext):	Seam Up: Tongue Seam Dn: Groove	Wall Thickness: 7"	Height (Ext): 15"	Weight (Net): 3864 lb Volume (Net): 0.99cu.yd

Job Name: 26-2254 - Wilder Box Culvert Job Location: Wilder, KY Contractor: Eaton Asphalt	Plant: 100 7/6/2026 1:23:16 PM	Tech: Jared - A PC: E. Bradley	

Structure ID: Box Culvert

P11 BC168144-12W12T12F-12H BOX CULVERT (12W/12F/12T) T/G

NOTES:

1. BOX CULVERT IS DESIGNED PER ATTACHED PE STAMPED DRAWINGS & CALCULATIONS.
2. LOAD REQUIREMENTS PER KY-HL93 (KY TABLE 1)
3. COVER DEPTH = 15" - 0"
4. CONCRETE: 5,000 PSI AT 28 DAYS.
5. REINFORCING: AS SHOWN BY MATT CHILDS ENGINEERING.
6. BOX CULVERT TO BE SEALED WITH CS-102 ROLL BUTYL MASTIC & CS-212 12" WRAP. (SUPPLIED BY ICAST).
7. WEIGHT: 48,363 LBS.

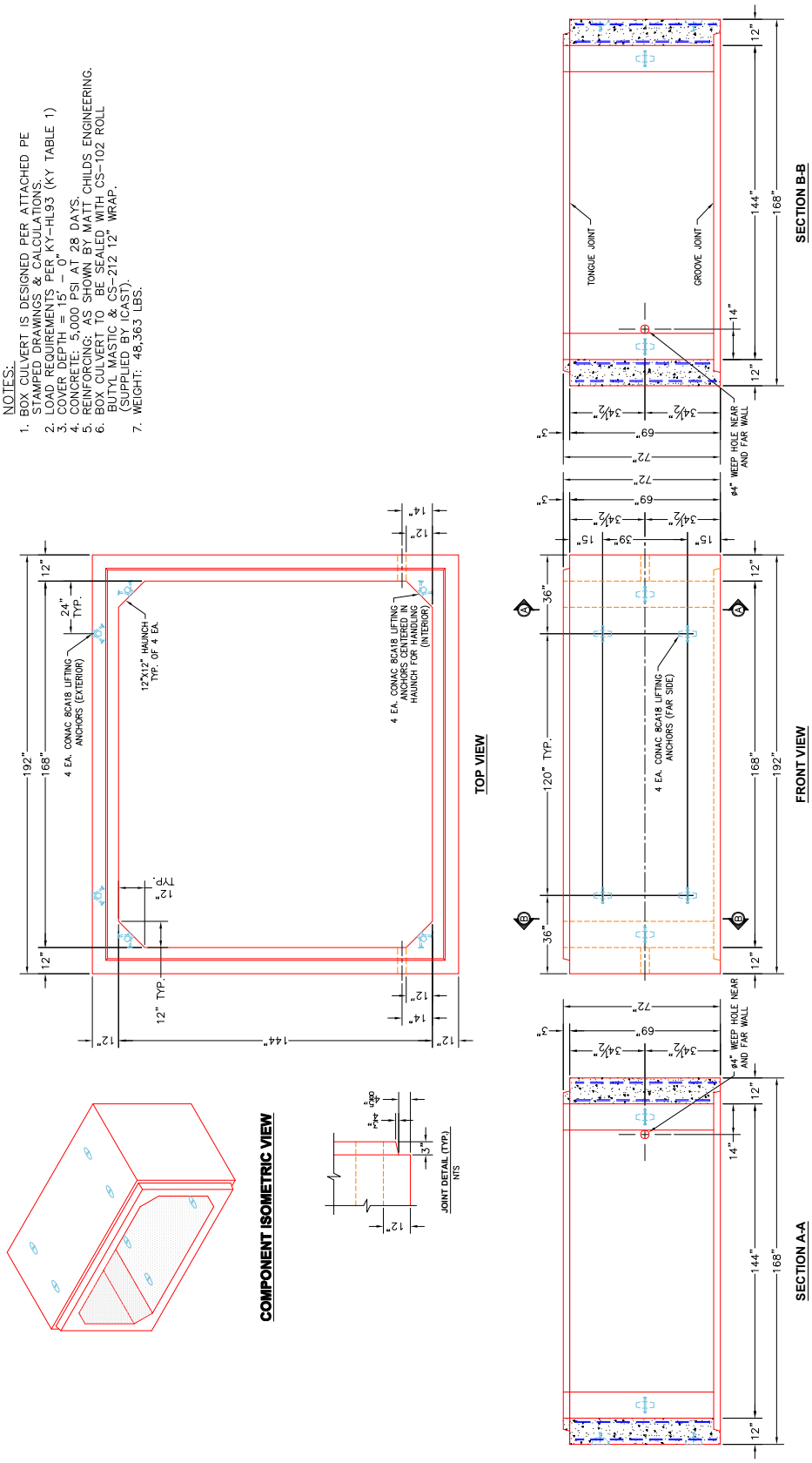

Coating (Int): Coating (Ext):	Seam Up: Tongue Seam Dn: Groove	Wall Thickness: 12" Floor Height: 0"	Height (Int): 69" Height (Ext): 69"	Weight (Net): 48363 lb Volume (Net): 12.35cu.yd

Project:	Mooch Road
Product:	14' x 12' Box Culvert
Job:	26-2254
Design No.:	
Location:	Wilder, KY
Reference #:	

MATT CHILDS ENGINEERING

www.mattchildsengineering.com

MATT CHILDS ENGINEERING PLLC.

DESIGN ENGINEERING CONSULTANT

STATE OF KENTUCKY
MATTHEW S. CHILDS
39653
LICENSED
PROFESSIONAL ENGINEER

06/08/2026

Spec.: LRFD 9th ed.
Type of Culvert: Precast

Physical Dimensions

Clear Span:	14'-0"
Clear Height:	12'-0"
Top Slab:	1'-0"
Bottom Slab:	1'-0"
Ext. Wall:	1'-0"
Fill Depth:	15.00 ft
Length:	4'-0"
Skew Angle:	0.00 deg
Bottom Slab Support:	Full Slab
Top Haunch, Width:	1'-0"
Top Haunch, Height:	1'-0"
Bottom Haunch, Width:	1'-0"
Bottom Haunch, Height:	1'-0"

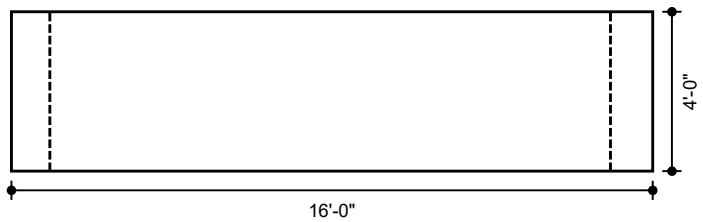

Plan View

Material Properties

Concrete	
Strength, f'c:	5.000 ksi
Density:	0.150 kcf
Elasticity, Ec:	3834 ksi
Type:	Normal wt
Steel	
Yield, fy:	65 ksi
Allow Stress:	39 ksi
Elasticity, Es:	29000 ksi
Soil	
Density:	0.120 kcf
Exposure Factor	
Class 2 Exposure	
Reinforcement Covers	
Ext. Cover Top Slab:	1"
Ext. Cover Bottom Slab	1"
Ext. Cover Walls	1"
Int. Cover Walls	1"
Int. Cover Top Slab	1"
Int. Cover Bottom Slab	1"

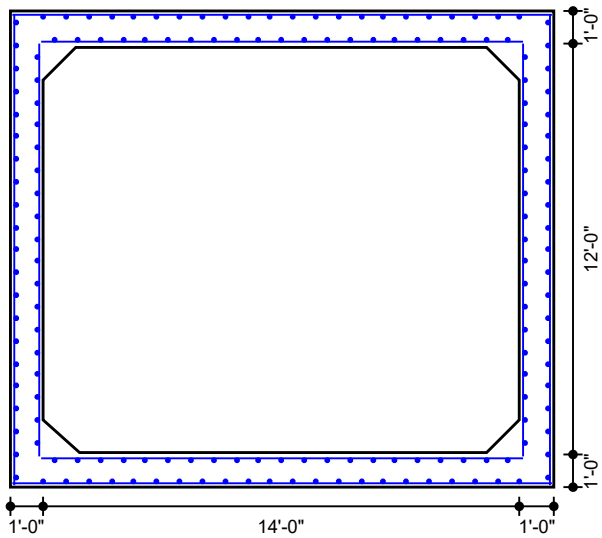

Typical Section

Controlling Ratings

Inventory Rating: 5.85
Operating Rating: 7.59

Loads

Live Load	
Vehicle Names:	HL-93
Traffic Direction:	Parallel
Eq. Height of Soil:	2.00 ft (Calc'd)
Dead Load	
Future Wearing Surface:	0.000 klf
Additional Dead Load:	0.000 klf
Concentrated Loads:	none

Lateral Soil Loads

Eq. Fluid Press. Max:	60.00 pcf
Eq. Fluid Press. Min:	30.00 pcf

Interior Water Pressure:	yes, head pressure = 0 ft
Exterior Water Pressure:	no

Copyright © 2010-2025 Eriksson Software, Inc.(eriktech.com)

Concrete Summary
Volume of Concrete: 2.148 cy/ft Total Volume of Concrete: 8.593 cy

Reinforcing Steel Bar Schedule (lb)

Location	Mark	Sheets Included	As Provided
Top Slab(Int)	A100 (AS2)	Top	1.200
Bot Slab(Int)	A200 (AS3)	Bot	1.290
Top Slab(Ext)	A300 (AS7)	Top	0.300
Bot Slab(Ext)	A400 (AS8)	Bot	0.300
Corner(Top)	A1 (AS1)	Top	0.780
Corner(Bot)	A2 (AS1)	Bot	0.780
Wall(Int)	B1 (AS4)	L&R	0.300
Wall(Ext)	B2 (AS1)	L&R	0.780
Longit. Top (Int)	C100 (AS5)	Top	0.150
Longit. Bot (Int)	C200	Bot	0.150
Longit. Top (Ext)	C1 (AS6)	Top	0.150
Longit. Bot (Ext)	C1 (AS6)	Bot	0.150
Longit. Wall (Ext)	C1 (AS6)	L&R	0.150
Longit. Wall (Int)	C1 (AS6)	L&R	0.150

Copyright © 2010-2025 Eriksson Software, Inc.(eriktech.com)

Job Name: 26-1899 - Gateway 65 Industrial Road Job Location: Franklin, KY Contractor: RD Sitework LLC	Plant: 100 7/10/2026 10:21:02 AM	Tech: Jared - F PC: E. Bardley	

Structure ID: QL70-3 POND3

P1 BX4848-08BAVF BOX BASE 8inW, 8inF, Variable Ht

P3) 24" x 24" - CASTING HEIGHT - 4"	0 lb
P2) 48" x 48" - BX FLAT LID 8inW w/CC 24"x24" HOLE - 8"	2363 lb
P1) 48" x 48" - BOX BASE 8inW, 8inF, Variable Ht - 36"	8163 lb
1) CASTING - HOE-326-BH F/G	289 lb
1) 48" x 48" - Conseal CS-102 1.00"	0 lb
1) 24" x 24" - Conseal CS-102 1.00"	0 lb
1) Hole - 0	0 lb

Structure Total:	10815 lb

Structure Notes: .
1. PER ASTM C913 SPECIFICATIONS.
2. CONCRETE = 4,000 PSI AT 28 DAYS.
3. NO STEPS AND NO INVERT CHANNEL.
4. CASTING BY ICAST (HOE-326-BH F/G OR EJ 6626).
.
REINFORCING PER ASTM A615 (GRADE 60).
- TOP SLAB (As .62) #5 BARS AT 6" C.C.E.W.
- WALLS (As .12) #5 BARS AT 12" C.C.E.W.
- FLOOR (As .12) #5 BARS AT 12" C.C.E.W.

Rim: 683' Rim to Invert: 4' Slack: 0" Sump: 0" Step Position:

Position	Elev	Angle	Ext. (cw)	Pipe	Pipe OD	Connector	Hole	Horz Size	Up (_)	Offset
Invert 1	679'	0°	32"	0" No Hole	0.01"	Hole 0	0"	0"	0"	0"
Invert 2										
Invert 3										
Invert 4										
Invert 5										
Invert 6										
Invert 7										
Invert 8										

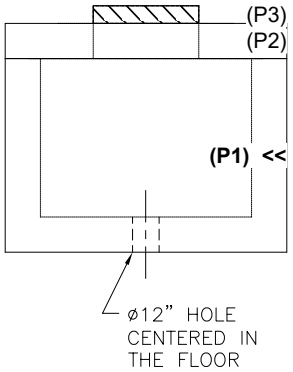

RIGHT-SIDE UP VIEW (int. dimensions)

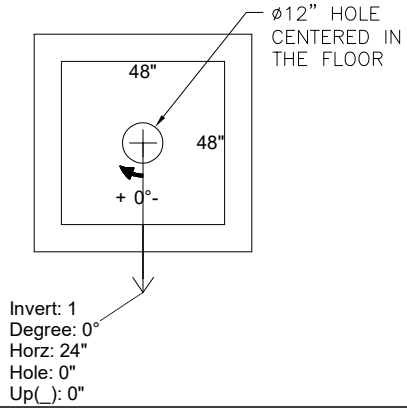

UPSIDE-DOWN VIEW (int. dimenions)

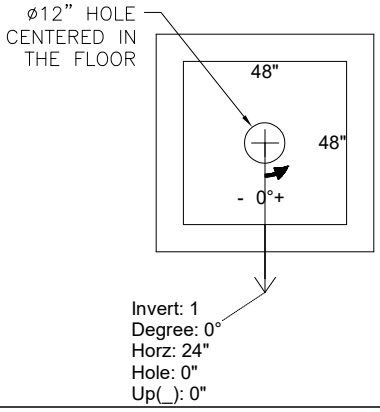

INSIDE WALL DIMENSIONS

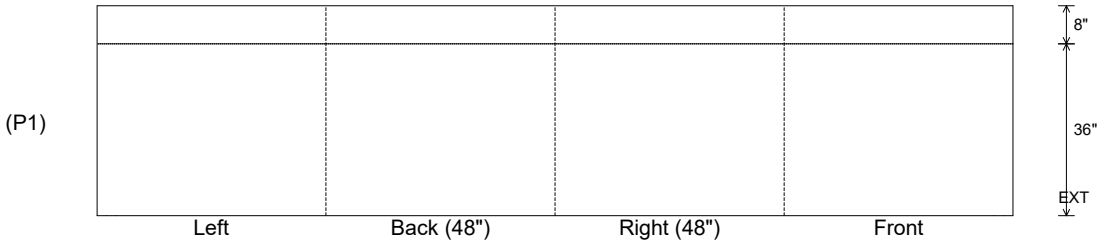

Coating (Int): Coating (Ext):	Seam Up: Flat Seam Dn: n/a	Wall Thickness: 8" Floor Height: 8"	Height (Int): 36" Height (Ext): 44"	Weight (Net): 8163 lb Volume (Net): 2.08cu.yd

Job Name: 26-1899 - Gateway 65 Industrial Road Job Location: Franklin, KY Contractor: RD Sitework LLC	Plant: 100 7/10/2026 10:21:01 AM	Tech: Jared - F PC: E. Bardley	

Structure ID: QL70-2 POND1

P1 BX4848-08BAVF BOX BASE 8inW, 8inF, Variable Ht

P3) 24" x 24" - CASTING HEIGHT - 4"	0 lb
P2) 48" x 48" - BX FLAT LID 8inW w/CC 24"x24" HOLE - 8"	2363 lb
P1) 48" x 48" - BOX BASE 8inW, 8inF, Variable Ht - 36"	8163 lb
1) CASTING - HOE-326-BH F/G	289 lb
1) 48" x 48" - Conseal CS-102 1.00"	0 lb
1) 24" x 24" - Conseal CS-102 1.00"	0 lb
1) Hole - 0	0 lb

Structure Total:	10815 lb

Structure Notes: .
1. PER ASTM C913 SPECIFICATIONS.
2. CONCRETE = 4,000 PSI AT 28 DAYS.
3. NO STEPS AND NO INVERT CHANNEL.
4. CASTING BY ICAST (HOE-326-BH F/G OR EJ 6626).
.
REINFORCING PER ASTM A615 (GRADE 60).
- TOP SLAB (As .62) #5 BARS AT 6" C.C.E.W.
- WALLS (As .12) #5 BARS AT 12" C.C.E.W.
- FLOOR (As .12) #5 BARS AT 12" C.C.E.W.

Rim: 652' Rim to Invert: 4' Slack: 0" Sump: 0" Step Position:

Position	Elev	Angle	Ext. (cw)	Pipe	Pipe OD	Connector	Hole	Horz Size	Up (_)	Offset
Invert 1	648'	0°	32"	0" No Hole	0.01"	Hole 0	0"	0"	0"	0"
Invert 2										
Invert 3										
Invert 4										
Invert 5										
Invert 6										
Invert 7										
Invert 8										

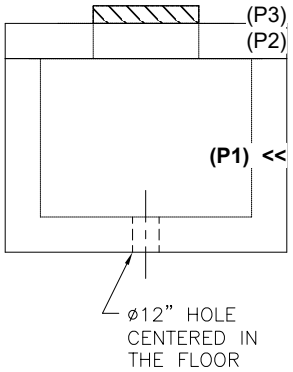

RIGHT-SIDE UP VIEW (int. dimensions)

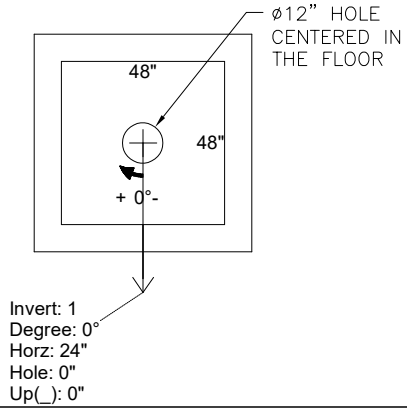

UPSIDE-DOWN VIEW (int. dimenions)

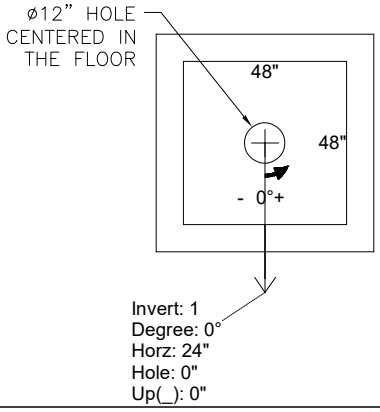

INSIDE WALL DIMENSIONS

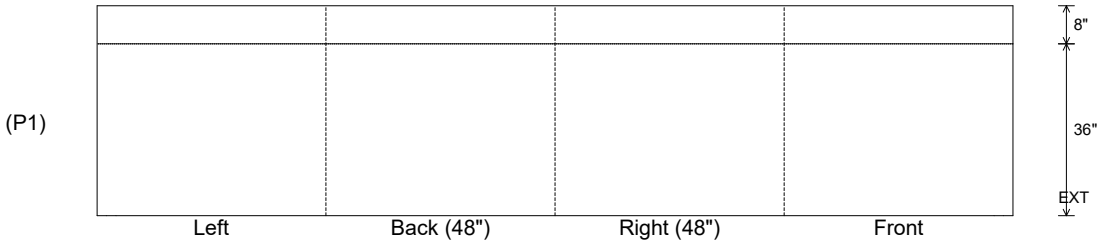

Coating (Int): Coating (Ext):	Seam Up: Flat Seam Dn: n/a	Wall Thickness: 8" Floor Height: 8"	Height (Int): 36" Height (Ext): 44"	Weight (Net): 8163 lb Volume (Net): 2.08cu.yd

Job Name: 26-2146 - Fairview Apartments Job Location: Russell Springs, KY 42642 Contractor: Dirt Design Construction LLC	Plant: 100 8/3/2026 11:45:28 AM	Tech: J. Horsley PC: M. Sullivan	

Structure ID: 07 ST-SCB

P1 BX2436-08BA36 BOX BASE 8inW, 8inF

P3) 18" x 36" - CASTING HEIGHT - 5.5"	0 lb
P2) 24" x 36" - CB FLAT TOP 8"W (18"x36" HOLE) - 8"	961 lb
P1) 24" x 36" - BOX BASE 8inW, 8inF - 36"	4739 lb
1) 24" x 36" - Conseal CS-102 1.00"	0 lb
2) Hole - 16	0 lb
1) Hole - 10	0 lb

Structure Total:	5700 lb

Structure Notes: .
1. PER ASTM C913 SPECIFICATIONS.
2. CONCRETE = 4,000 PSI AT 28 DAYS.
3. CASTING BY OTHERS (HOE 580 F/G)
.
REINFORCING PER ASTM A615 (GRADE 60).
- TOP SLAB = H20 LOADING.
- WALLS (As .31) #5 BARS AT 12" C.C.E.W.
- FLOOR (As .31) #5 BARS AT 12" C.C.E.W.

Rim: 1069.65' Rim to Invert: 4.16' Slack: 0.42" Sump: 0" Step Position:

Position	Elev	Angle	Ext. (cw)	Pipe	Pipe OD	Connector	Hole	Horz Size	Up (_)	Offset
Invert 1	1065.49'	90°	17"	12" HDPE	14.5"	Hole 16	16"	16"	-1.25"	-9"
Invert 2	1065.49'	240°	12.144"	6" HDPE	6.9"	Hole 10	10"	11.547"	-0.45"	-2"
Invert 3	1065.49'	270°	35"	12" HDPE	14.5"	Hole 16	16"	16"	-1.25"	9"
Invert 4										
Invert 5										
Invert 6										
Invert 7										
Invert 8										

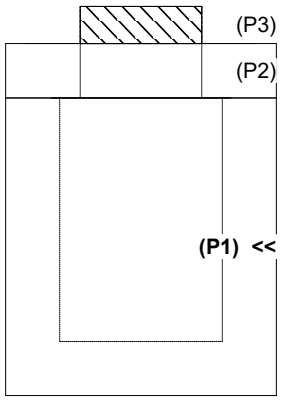

RIGHT-SIDE UP VIEW (int. dimensions)

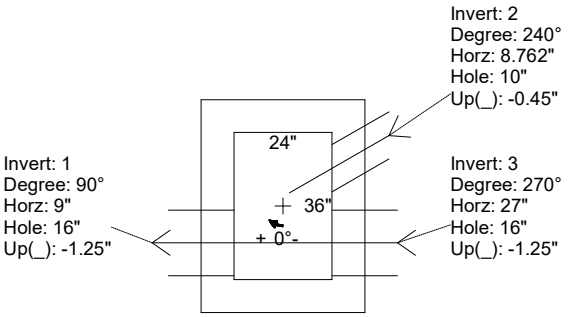

UPSIDE-DOWN VIEW (int. dimenions)

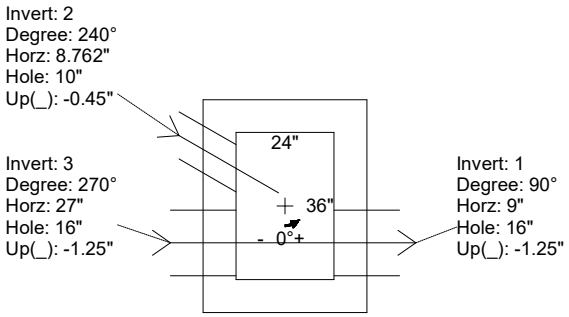

INSIDE WALL DIMENSIONS

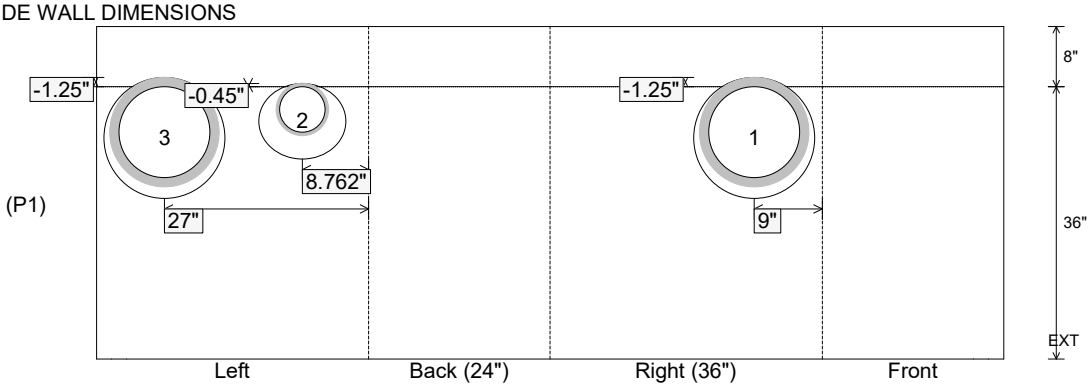

Coating (Int): Coating (Ext):	Seam Up: Flat Seam Dn: n/a	Wall Thickness: 8" Floor Height: 8"	Height (Int): 36" Height (Ext): 44"	Weight (Net): 4739 lb Volume (Net): 1.21cu.yd

Job Name: 26-2146 - Fairview Apartments Job Location: Russell Springs, KY 42642 Contractor: Dirt Design Construction LLC	Plant: 100 8/3/2026 11:45:25 AM	Tech: J. Horsley PC: M. Sullivan	

Structure ID: 04 ST-CB1

P1 BX2436-08BVF **BOX BASE 8inW, 8inF, Variable Ht**

P3) 18" x 36" - CASTING HEIGHT - 5.5"	0 lb
P2) 24" x 36" - CB FLAT TOP 8"W (18"x36" HOLE) - 8"	961 lb
P1) 24" x 36" - BOX BASE 8inW, 8inF, Variable Ht - 20"	3069 lb
1) 24" x 36" - Conseal CS-102 1.00"	0 lb
1) Hole - 20	0 lb
1) Hole - 16	0 lb
Structure Total:	4030 lb

Structure Notes: .
1. PER ASTM C913 SPECIFICATIONS.
2. CONCRETE = 4,000 PSI AT 28 DAYS.
3. CASTING BY OTHERS (HOE 580 F/G)
.
REINFORCING PER ASTM A615 (GRADE 60).
- WALLS (As .31) #5 BARS AT 12" C.C.E.W.
- FLOOR (As .31) #5 BARS AT 12" C.C.E.W.

Rim: 1057.95' Rim to Invert: 2.8' Slack: 0.1" Sump: 0" Step Position:

Position	Elev	Angle	Ext. (cw)	Pipe	Pipe OD	Connector	Hole	Horz Size	Up (_)	Offset
Invert 1	1055.15'	20°	23.078"	15" HDPE	17.6"	Hole 20	20"	21.284"	-1.3"	-6"
Invert 2	1055.15'	160°	16.922"	12" HDPE	14.5"	Hole 16	16"	17.027"	-1.25"	6"
Invert 3										
Invert 4										
Invert 5										
Invert 6										
Invert 7										
Invert 8										

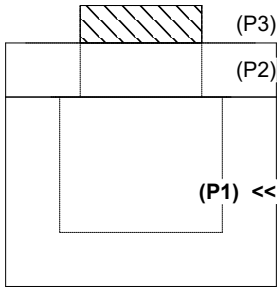

RIGHT-SIDE UP VIEW (int. dimensions)

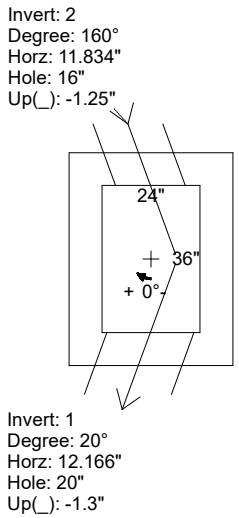

UPSIDE-DOWN VIEW (int. dimenions)

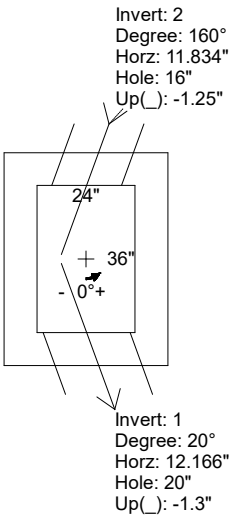

INSIDE WALL DIMENSIONS

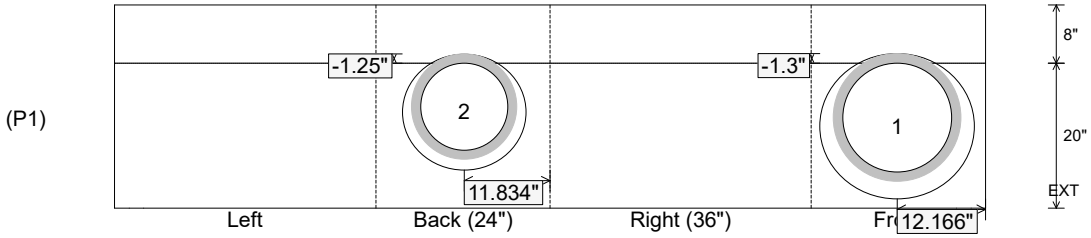

Coating (Int): Coating (Ext):	Seam Up: Flat Seam Dn: n/a	Wall Thickness: 8" Floor Height: 8"	Height (Int): 20" Height (Ext): 28"	Weight (Net): 3069 lb Volume (Net): 0.78cu.yd

Job Name: 26-2146 - Fairview Apartments Job Location: Russell Springs, KY 42642 Contractor: Dirt Design Construction LLC	Plant: 100 8/3/2026 11:45:38 AM	Tech: J. Horsley PC: M. Sullivan	

Structure ID: 22 ST-DCB

P1 BX3636-08BAVF BOX BASE 8inW, 8inF, Variable Ht

P2) 36" x 36" - CASTING HEIGHT - 3"	0 lb
P1) 36" x 36" - BOX BASE 8inW, 8inF, Variable Ht - 35"	5597 lb
1) 36" x 36" - Conseal CS-102 1.00"	0 lb
1) Hole - 20	0 lb
1) Hole - 16	0 lb
Structure Total:	5597 lb

Structure Notes: .
1. PER ASTM C478 SPECIFICATIONS.
2. CONCRETE = 4,000 PSI AT 28 DAYS.
3. CASTING BY OTHERS (HOE 595 F/G)
.
REINFORCING PER ASTM A615 (GRADE 60).
- TOP SLAB (As .62) #5 BARS AT 6" C.C.E.W.
- RISER (As .12)
- FLOOR (As .31) #5 BARS AT 12" C.C.E.W.

Rim: 1067.95' Rim to Invert: 3.24' Slack: 0.88" Sump: 0" Step Position:

Position	Elev	Angle	Ext. (cw)	Pipe	Pipe OD	Connector	Hole	Horz Size	Up (_)	Offset
Invert 1	1064.71'	15°	29.861"	15" HDPE	17.6"	Hole 20	20"	20.706"	-1.3"	-3"
Invert 2	1064.71'	270°	26"	12" HDPE	14.5"	Hole 16	16"	16"	-1.25"	0"
Invert 3										
Invert 4										
Invert 5										
Invert 6										
Invert 7										
Invert 8										

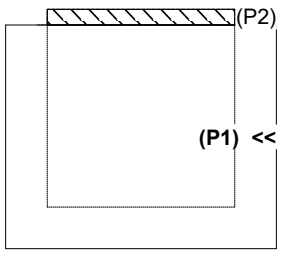

RIGHT-SIDE UP VIEW (int. dimensions)

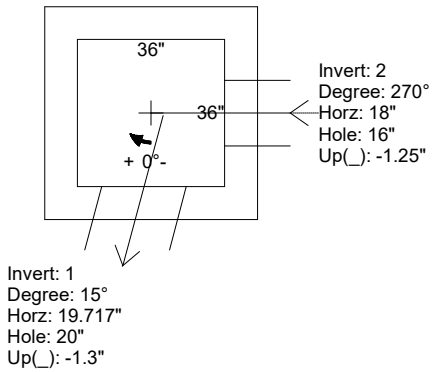

UPSIDE-DOWN VIEW (int. dimenions)

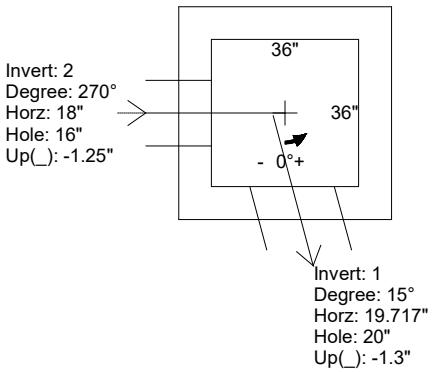

INSIDE WALL DIMENSIONS

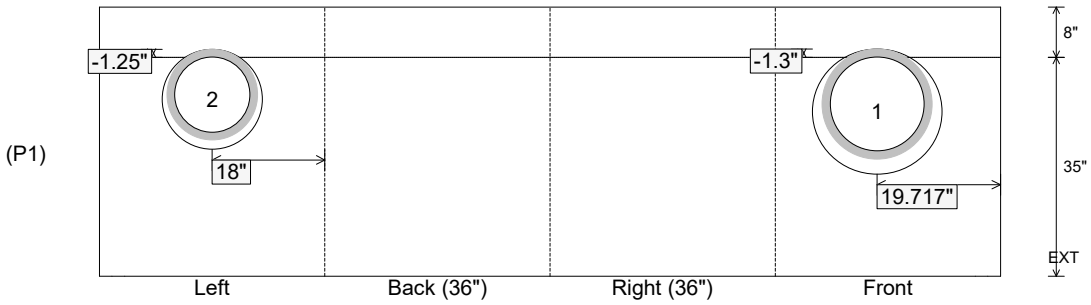

Coating (Int): Coating (Ext):	Seam Up: Flat Seam Dn: n/a	Wall Thickness: 8" Floor Height: 8"	Height (Int): 35" Height (Ext): 43"	Weight (Net): 5597 lb Volume (Net): 1.43cu.yd

Job Name: 26-2146 - Fairview Apartments Job Location: Russell Springs, KY 42642 Contractor: Dirt Design Construction LLC	Plant: 100 8/3/2026 11:45:32 AM	Tech: J. Horsley PC: M. Sullivan	

Structure ID: 12 ST-SCB

P1 BX3636-08BA30 BOX BASE 8inW, 8inF

P2) 36" x 36" - CASTING HEIGHT - 3"	0 lb
P1) 36" x 36" - BOX BASE 8inW, 8inF - 30"	5191 lb
1) 36" x 36" - Conseal CS-102 1.00"	0 lb
1) Hole - 16	0 lb
1) Hole - 8	0 lb
Structure Total:	5191 lb

Structure Notes: .
1. PER ASTM C913 SPECIFICATIONS.
2. CONCRETE = 4,000 PSI AT 28 DAYS.
3. CASTING BY OTHERS (HOE 595 F/G)
.
REINFORCING PER ASTM A615 (GRADE 60).
- WALLS (As .31) #5 BARS AT 12" C.C.E.W.
- FLOOR (As .31) #5 BARS AT 12" C.C.E.W.

Rim: 1063.2' Rim to Invert: 2.8' Slack: 0.6" Sump: 0" Step Position:

Position	Elev	Angle	Ext. (cw)	Pipe	Pipe OD	Connector	Hole	Horz Size	Up (_)	Offset
Invert 1	1060.4'	90°	26"	12" HDPE	14.5"	Hole 16	16"	16"	-1.25"	0"
Invert 2	1061'	270°	26"	8" Hole	8"	Hole 8	8"	8"	7.2"	0"
Invert 3										
Invert 4										
Invert 5										
Invert 6										
Invert 7										
Invert 8										

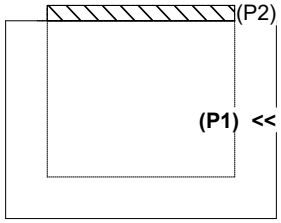

RIGHT-SIDE UP VIEW (int. dimensions)

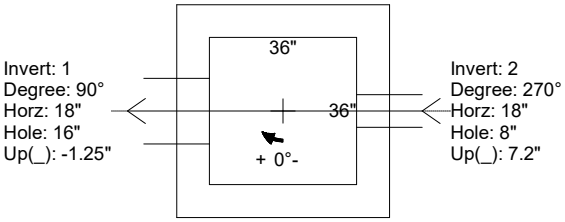

UPSIDE-DOWN VIEW (int. dimenions)

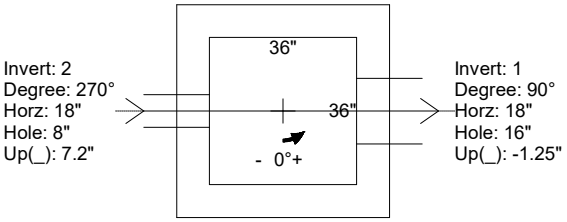

INSIDE WALL DIMENSIONS

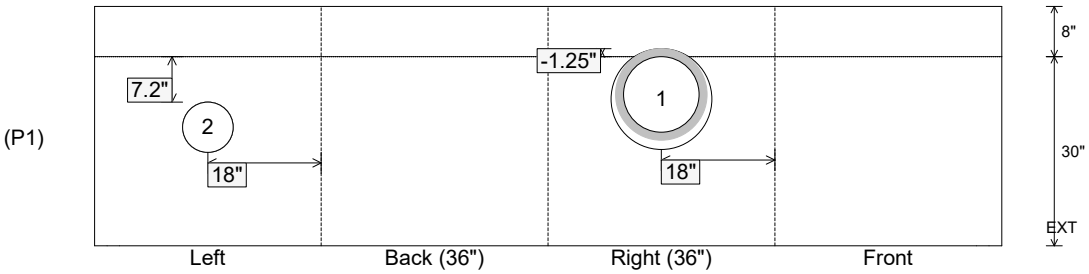

Coating (Int): Coating (Ext):	Seam Up: Flat Seam Dn: n/a	Wall Thickness: 8" Floor Height: 8"	Height (Int): 30" Height (Ext): 38"	Weight (Net): 5191 lb Volume (Net): 1.33cu.yd

Job Name: 26-1394 - TMMI Ryder Lift Station Job Location: Princeton, IN Contractor: Koberstein Contracting, Inc.	Plant: 100 7/16/2026 2:28:59 PM	Tech: Jared - A PC: A. Chambers	

Structure ID: 4 VV

P2 BX060096-08LD08SP BX FLAT LID 8"W w/37"x36" HATCH F/F

P3) 37" x 36" - HATCH (CAST FLUSH) - 3"	0 lb
P2) 60" x 96" - BX FLAT LID 8"W w/37"x36" HATCH F/F - 8"	4820 lb
P1) 60" x 96" - BX BASE w/FLANGE 08W/08F/06EF F/n - 85"	26684 lb
1) JOINT WRAP PRIMER - CONSEAL CS-75 (1 gal.)	0 lb
1) JOINT WRAP - 0.065"x6"x50' CONSEAL CS212	0 lb
1) This Structure Includes a Cast-in Item - 37" x 36" Hatch (Supplied by Others)	0 lb
1) SECONDARY POUR	0 lb
1) LADDER (Alum.) - HALLIDAY L1D 84in Floor-Ceiling Mount Ladder	65 lb
1) 60" x 96" - Conseal CS-102 1.00" (Double)	0 lb
8) PSX - 8QRS-S NYLO	52 lb
Structure Total:	31621 lb

Structure Notes:

1. PER ASTM C-913 SPECIFICATIONS
2. CONCRETE: 4,000 PSI AT 28 DAYS
3. REINFORCEMENT: #5 BAR @ 6" C.C. E.W. (GRADE 60) - 2" MIN. REBAR CLEARANCE (TYP)
4. USF FABRICATION 37" X 36" (36" X 36" CLEAR OPENING) HATCH SUPPLIED BY OTHERS - TO BE CAST INTO FLAT LID
5. LIFTERS: 4 EA. 5CA14 CONAC A-ANCHORS FOR PLANT & FIELD HANDLING - INSTALLED AS SHOWN
6. TOP SURFACE TO RECEIVE LIGHT BRUSH FINISH

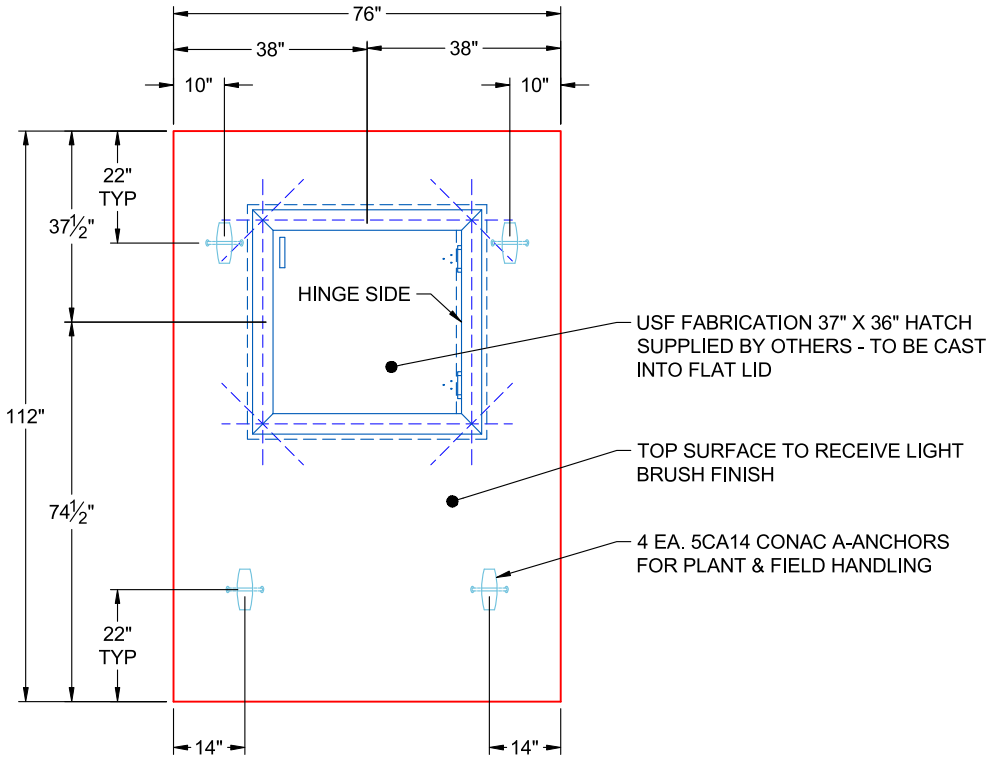

PLAN VIEW
(RIGHT SIDE UP)

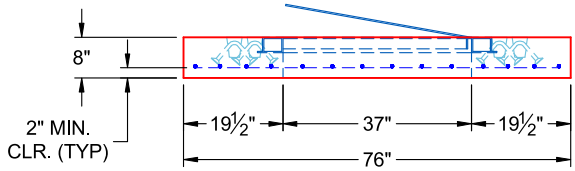

FRONT VIEW
(RIGHT SIDE UP)

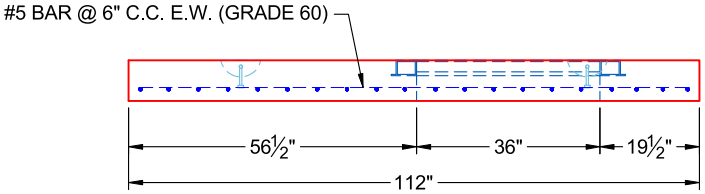

SIDE VIEW
(RIGHT SIDE UP)

Coating (Int): Coating (Ext):	Seam Up: Flat Seam Dn: Flat	Wall Thickness: 8"	Height (Ext): 8"	Weight (Net): 4820 lb Volume (Net): 1.23cu.yd

Job Number:

26-1394

Job Name:

TMMI Ryder Lift Station

Structure:

4 VV

Note:

USF Fabrication 37” x 36” Hatch Supplied By Others To Be Cast Into Flat Lid

Job Name: 26-2038 - Sturgis Municipal Airport-Ph2 Job Location: Sturgis, KY Contractor: M. Bowling, Inc.	Plant: 100 8/3/2026 12:43:26 PM	Tech: Jared - F PC: A. Chambers	

Structure ID: D1 DBI2

P1 BX3648-08BA60 BOX BASE 8inW, 8inF F/n

P2) 36" x 48" - P.I.P. - BY OTHERS - 8"	0 lb
P1) 36" x 48" - BOX BASE 8inW, 8inF F/n - 60"	9393 lb
1) CASTING - HOE KY-398 SET (DBI 2)	398 lb
1) 36" x 48" - Conseal CS-102 1.00"	0 lb
1) Hole - 40	0 lb
1) Hole - 10	0 lb
Structure Total:	9791 lb

Structure Notes: .
1. KYTC DBI TYPE 2 / ASTM C913 SPECIFICATIONS.
2. CONCRETE = 4,000 PSI AT 28 DAYS.
3. STUB #5 BARS 20" OUT TOP OF WALLS (SPA@12"C/C)
4. CASTING SUPPLIED BY ICAST (HOE KY-398 SET (DBI 2)).

.
REINFORCING PER ASTM A615 (GRADE 60).
- WALLS (As .31) #5 BARS AT 12" C.C.E.W.
- FLOOR (As .31) #5 BARS AT 12" C.C.E.W.

Rim: 367.57' Rim to Invert: 5.36' Slack: 1.32" Sump: 5" Step Position:

Position	Elev	Angle	Ext. (cw)	Pipe	Pipe OD	Connector	Hole	Horz Size	Up (_)	Offset
Invert 1	362.21'	90°	32"	30" RCP B WALL	37"	Hole 40	40"	40"	0"	0"
Invert 2	364.7'	180°	26"	6" HDPE	6.9"	Hole 10	10"	10"	32.875"	0"
Invert 3										
Invert 4										
Invert 5										
Invert 6										
Invert 7										
Invert 8										

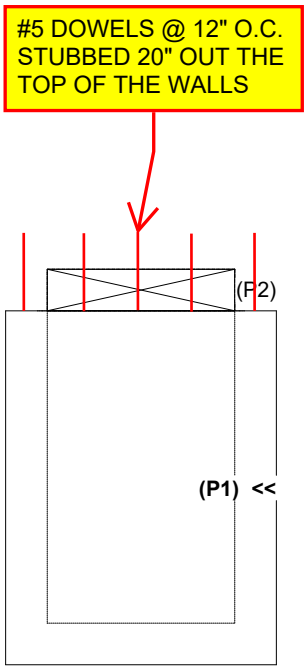

RIGHT-SIDE UP VIEW (int. dimensions)

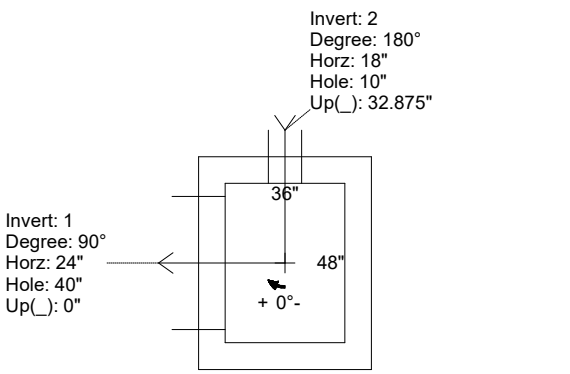

UPSIDE-DOWN VIEW (int. dimenions)

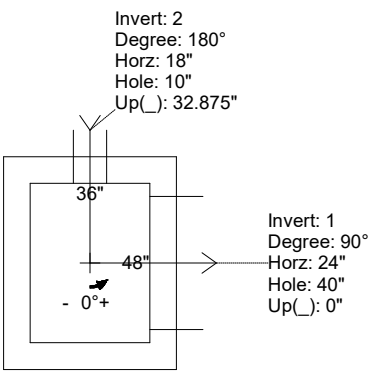

INSIDE WALL DIMENSIONS

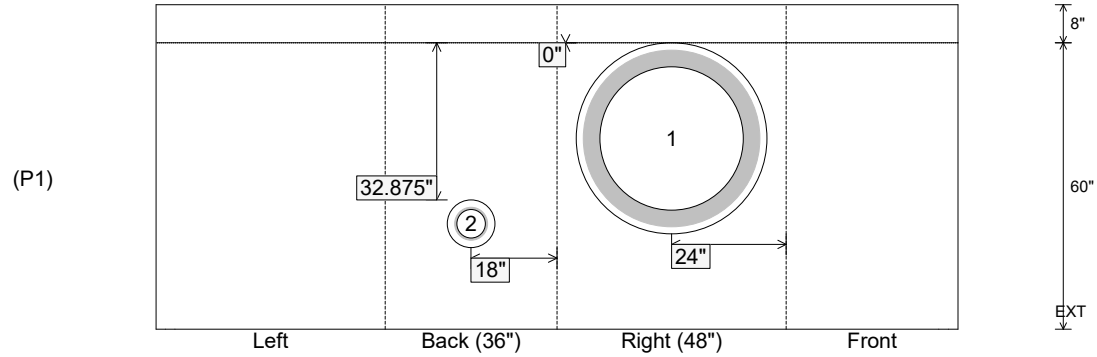

Coating (Int): Coating (Ext):	Seam Up: Flat Seam Dn: n/a	Wall Thickness: 8" Floor Height: 8"	Height (Int): 60" Height (Ext): 68"	Weight (Net): 9393 lb Volume (Net): 2.4cu.yd

Job Name: 25-3193 - KYTC Kenton Co Call 328 (251320) Job Location: Independence, KY Contractor: Eaton Asphalt	Plant: 100 6/4/2026 4:51:20 PM	Tech: Jared - A PC: J. Jarvis	

Structure ID: 588

P1 BX2436-08BVF BOX BASE 8inW, 8inF, Variable Ht T/n

P3) 24" x 120" - CB INLET KY A 10' TOP LEFT F/G - 10"	3400 lb
P2) 24" x 120" - CB INLET KY A 10' BOTTOM LEFT T/G - 18"	5270 lb
P1) 24" x 36" - BOX BASE 8inW, 8inF, Variable Ht T/n - 29"	4100 lb
1) CASTING - HOE KY-206 F/C (KY TY1)	206 lb
1) This Structure Includes a Cast-in Item - KY-206 Frame (Supplied by iCast)	0 lb
1) 24" x 36" - Conseal CS-102 1.00"	0 lb
1) Hole - 22	0 lb
2) Hole - 8	0 lb
Structure Total:	12976 lb

Structure Notes:

** KYTC STATE PROJECT **

1. PER KYTC CBI TY A / ASTM C-913 SPECS
2. CONCRETE: 4,000 PSI AT 28 DAYS
3. REINFORCEMENT: #5 BAR @ 12" C.C. E.W. (GRADE 60) - 2" MIN. REBAR CLEARANCE (TYP)
4. NO STORM INVERT
5. NO STEPS
6. KY-206 FRAME & COVER "STORM" SUPPLIED BY ICAST - FRAME TO BE CAST INTO TOP PHASE TOP FLANGE SIDE UP
7. INVERT 2 OFFSET 14" FROM CENTER OF WALL

Rim: 910.45' Rim to Invert: 4.75' Slack: 0" Sump: 0" Step Position:

Position	Elev	Angle	Ext. (cw)	Pipe	Pipe OD	Connector	Hole	Horz Size	Up (_)	Offset
Invert 1	905.7'	0°	20"	15" ADS N-12	18"	Hole 22	22"	22"	-3.5"	0"
Invert 2	907.28'	90°	12"	4" HDPE (perf pipe)	4.8"	Hole 8	8"	8"	17"	-14"
Invert 3	907.28'	180°	20"	4" HDPE (perf pipe)	4.8"	Hole 8	8"	8"	17"	0"
Invert 4										
Invert 5										
Invert 6										
Invert 7										
Invert 8										

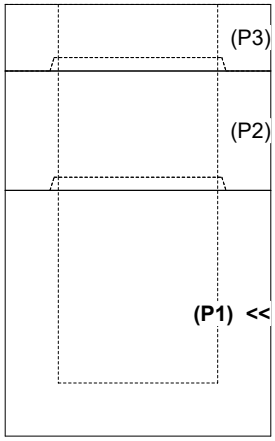

RIGHT-SIDE UP VIEW (int. dimensions)

UPSIDE-DOWN VIEW (int. dimenions)

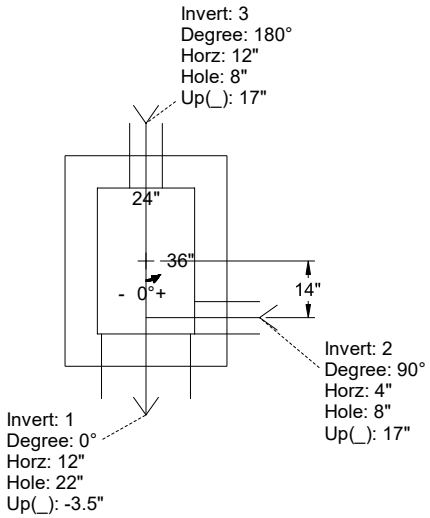

INSIDE WALL DIMENSIONS

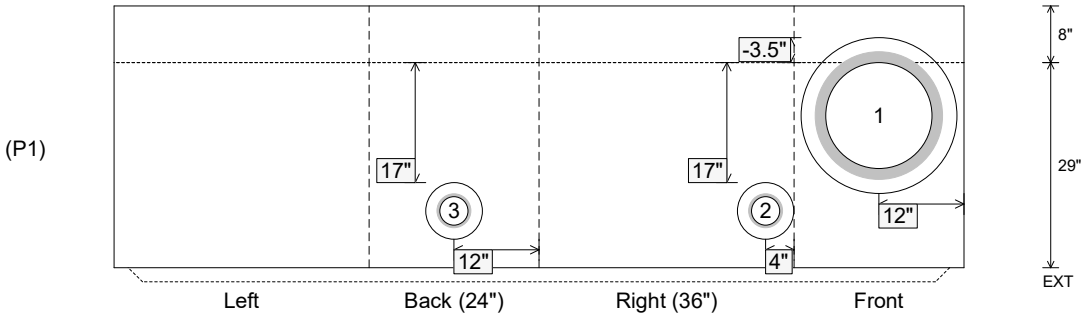

Coating (Int): Coating (Ext):	Seam Up: Tongue Seam Dn: n/a	Wall Thickness: 8" Floor Height: 8"	Height (Int): 29" Height (Ext): 37"	Weight (Net): 4100 lb Volume (Net): 1.05cu.yd

Job Name: 25-3193 - KYTC Kenton Co Call 328 (251320) Job Location: Independence, KY Contractor: Eaton Asphalt	Plant: 100 6/4/2026 4:51:19 PM	Tech: Jared - A PC: J. Jarvis	

Structure ID: 584

P1 BX2436-08BVF BOX BASE 8inW, 8inF, Variable Ht T/n

P3) 24" x 120" - CB INLET KY A 10' TOP LEFT F/G - 10"	3400 lb
P2) 24" x 120" - CB INLET KY A 10' BOTTOM LEFT T/G - 18"	5270 lb
P1) 24" x 36" - BOX BASE 8inW, 8inF, Variable Ht T/n - 27"	3552 lb
1) CASTING - HOE KY-206 F/C (KY TY1)	206 lb
1) This Structure Includes a Cast-in Item - KY-206 Frame (Supplied by iCast)	0 lb
1) 24" x 36" - Conseal CS-102 1.00"	0 lb
2) Hole - 24	0 lb
1) Hole - 20	0 lb
2) Hole - 8	0 lb
Structure Total:	12428 lb

Structure Notes:

** KYTC STATE PROJECT **

1. PER KYTC CBI TY A / ASTM C-913 SPECS
2. CONCRETE: 4,000 PSI AT 28 DAYS
3. REINFORCEMENT: #5 BAR @ 12" C.C. E.W. (GRADE 60) - 2" MIN. REBAR CLEARANCE (TYP)
4. NO STORM INVERT
5. NO STEPS
6. KY-206 FRAME & COVER "STORM" SUPPLIED BY ICAST - FRAME TO BE CAST INTO TOP PHASE TOP FLANGE SIDE UP
7. INVERTS 4 & 5 OFFSET 14" FROM CENTER OF WALL

Rim: 893.72' Rim to Invert: 4.64' Slack: 0.68" Sump: 0" Step Position:

Position	Elev	Angle	Ext. (cw)	Pipe	Pipe OD	Connector	Hole	Horz Size	Up (_)	Offset
Invert 1	889.08'	0°	20"	18" ADS N-12	22"	Hole 24	24"	24"	-3"	0"
Invert 2	889.08'	180°	20"	18" ADS N-12	22"	Hole 24	24"	24"	-3"	0"
Invert 3	889.08'	270°	26"	15" ADS N-12	18"	Hole 20	20"	20"	-2.5"	0"
Invert 4	890.5'	90°	12"	4" HDPE (perf pipe)	4.8"	Hole 8	8"	8"	15"	-14"
Invert 5	890.5'	270°	12"	4" HDPE (perf pipe)	4.8"	Hole 8	8"	8"	15"	-14"
Invert 6										
Invert 7										
Invert 8										

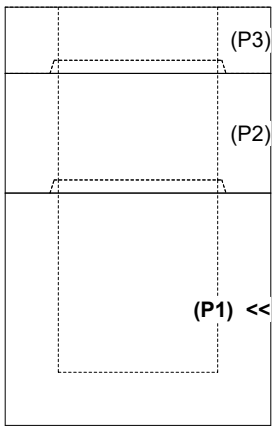

RIGHT-SIDE UP VIEW (int. dimensions)

UPSIDE-DOWN VIEW (int. dimenions)

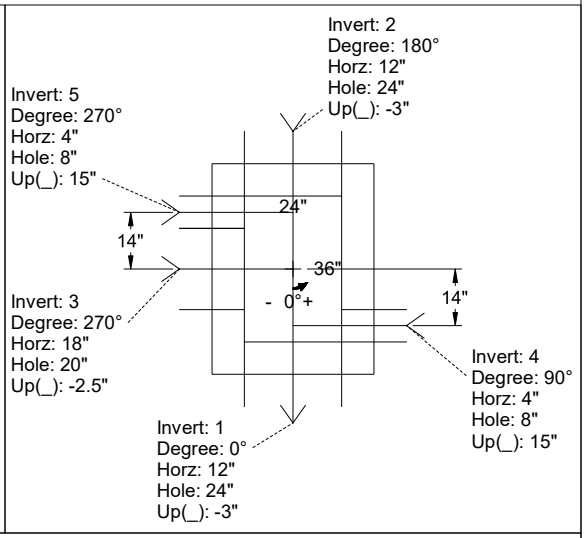

INSIDE WALL DIMENSIONS

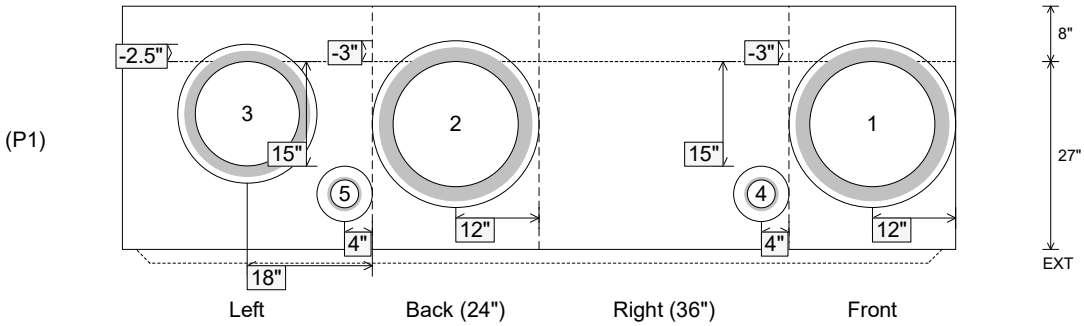

Coating (Int): Coating (Ext):	Seam Up: Tongue Seam Dn: n/a	Wall Thickness: 8" Floor Height: 8"	Height (Int): 27" Height (Ext): 35"	Weight (Net): 3552 lb Volume (Net): 0.91cu.yd

Job Name: 26-2146 - Fairview Apartments Job Location: Russell Springs, KY 42642 Contractor: Dirt Design Construction LLC	Plant: 100 8/3/2026 11:47:15 AM	Tech: J. Horsley PC: M. Sullivan	

Structure ID: 09 ST-DCB

P2 BX2436_08LD08 CB FLAT TOP 8"W (18"x36" HOLE)

P3) 18" x 36" - CASTING HEIGHT - 5.5"	0 lb
P2) 24" x 36" - CB FLAT TOP 8"W (18"x36" HOLE) - 8"	961 lb
P1) 24" x 36" - BOX BASE 8inW, 8inF, Variable Ht - 22"	3371 lb
1) 24" x 36" - Conseal CS-102 1.00"	0 lb
2) Hole - 16	0 lb
Structure Total:	4332 lb

Structure Notes: .
1. PER ASTM C913 SPECIFICATIONS.
2. CONCRETE = 4,000 PSI AT 28 DAYS.
3. CASTING BY OTHERS (HOE 580 F/G)
.
REINFORCING PER ASTM A615 (GRADE 60).
- TOP SLAB (As .62) #5 BARS AT 6" C.C.E.W.
- WALLS (As .31) #5 BARS AT 12" C.C.E.W.
- FLOOR (As .31) #5 BARS AT 12" C.C.E.W.

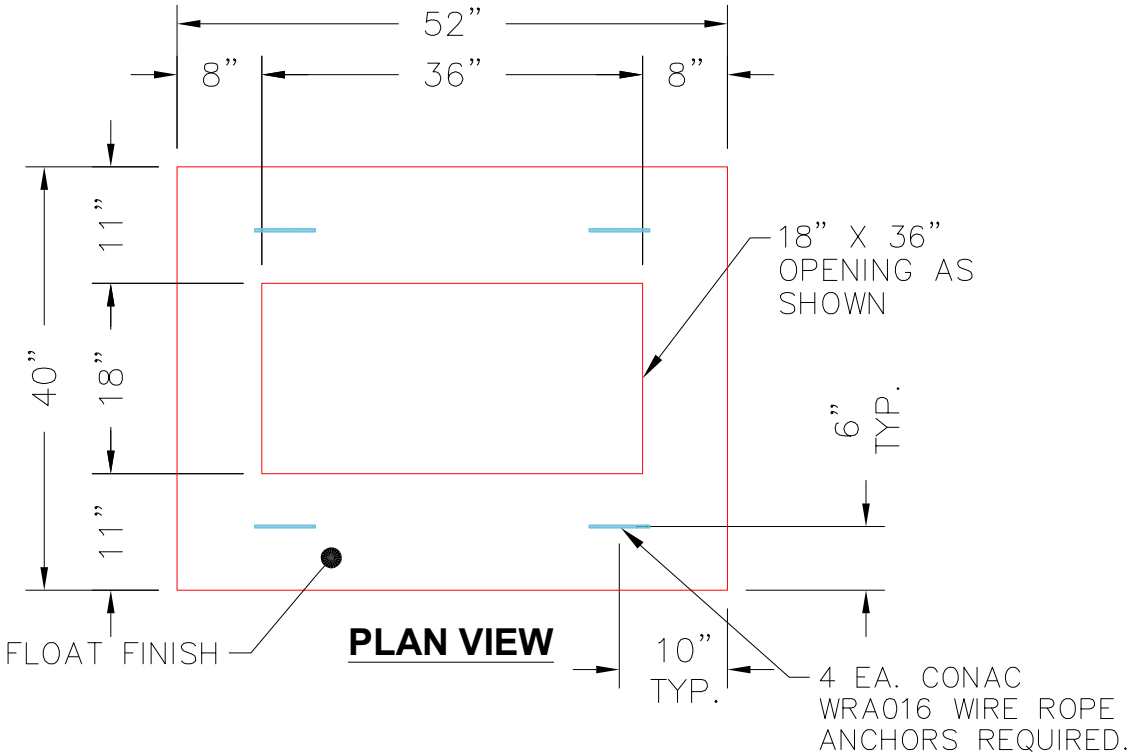

PLAN VIEW

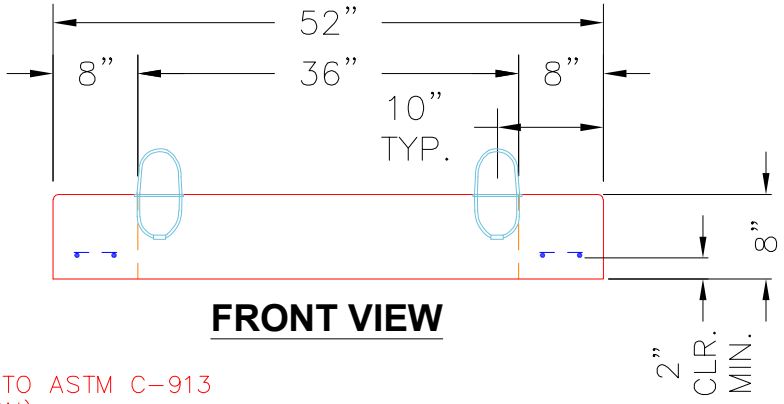

FRONT VIEW

NOTES:
1. MANUFACTURED TO ASTM C-913 (LATEST REVISION).
2. CONCRETE: 4,000 PSI AT 28 DAYS.
3. REINFORCING: H20 LOADING #5 BAR @ 6" O.C. E.W. (GRADE 60).

Coating (Int): Coating (Ext):	Seam Up: Flat Seam Dn: Flat	Wall Thickness: 8"	Height (Ext): 8"	Weight (Net): 961 lb Volume (Net): 0.25cu.yd

Job Name: 26-2038 - Sturgis Municipal Airport-Ph2 Job Location: Sturgis, KY Contractor: M. Bowling, Inc.	Plant: 100 7/31/2026 11:12:13 AM	Tech: Jared - F PC: A. Chambers	

Structure ID: C4 DBI7

P1 BX6072-08W08F-BAVF BOX BASE 8inW, 8inF, Variable Ht T/n

P3) 36" x 36" - P.I.P. - BY OTHERS - 8"	0 lb
P2) 60" x 72" - BOX RISER 8inW, Variable Ht F/G - 55"	10876 lb
P1) 60" x 72" - BOX BASE 8inW, 8inF, Variable Ht T/n - 82"	15713 lb
1) CASTING - HOE KY-328 SET (DBI 7)	328 lb
2) 60" x 72" - Conseal CS-102 1.00"	0 lb
1) Hole - 62	0 lb
1) Hole - 40	0 lb
1) Hole - 54	0 lb
1) Hole - 10	0 lb
Structure Total:	26917 lb

Structure Notes: .
1. KYTC DBI TYPE 7 / PER ASTM C913 SPEC'S.
2. CONCRETE = 4,000 PSI AT 28 DAYS.
3. STUB #5 BARS 20" OUT TOP OF WALLS (SPA@12"C/C)
4. CASTING SUPPLIED BY ICAST (HOE KY-328 SET (DBI 7)).
.
REINFORCING PER ASTM A615 (GRADE 60).
- WALLS (As .31) #5 BARS AT 12" C.C.E.W..
- FLOOR (As .31) #5 BARS AT 12" C.C.E.W.

Rim: 368.36' Rim to Invert: 11.55' Slack: 0.6" Sump: 7" Step Position:

Position	Elev	Angle	Ext. (cw)	Pipe	Pipe OD	Connector	Hole	Horz Size	Up (_)	Offset
Invert 1	356.81'	60°	39.375"	48" RCP B WALL	58"	Hole 62	62"	71.591"	0"	15"
Invert 2	358.7'	315°	29.375"	30" RCP B WALL	37"	Hole 40	40"	56.569"	24.625"	25"
Invert 3	357.01'	270°	44"	42" RCP B WALL	51"	Hole 54	54"	54"	3.375"	0"
Invert 4										
Invert 5										
Invert 6										
Invert 7										
Invert 8										

RIGHT-SIDE UP VIEW (int. dimensions) UPSIDE-DOWN VIEW (int. dimenions)

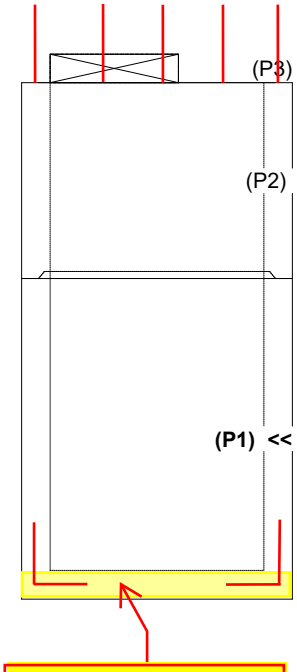

1ST POUR (FLOOR) STUB #5 L BARS OUT TOP FLOOR, SPA AT 12" C/C FOR CONNECTING WALLS

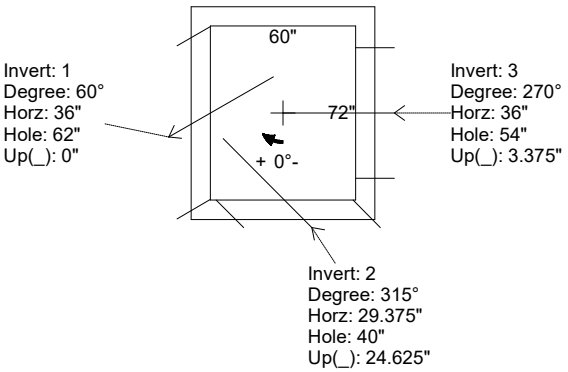

WEIGHTS
FIRST POUR - 4,489 LBS
SECOND POUR - 11,224 LBS
TOTAL - 15,713 LBS

INSIDE WALL DIMENSIONS

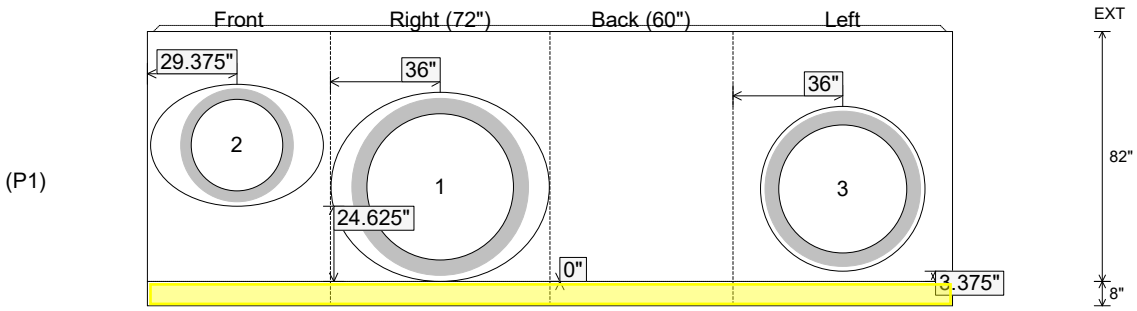

Coating (Int): Coating (Ext):	Seam Up: Tongue Seam Dn: n/a	Wall Thickness: 8" Floor Height: 8"	Height (Int): 82" Height (Ext): 90"	Weight (Net): 15713 lb Volume (Net): 4.01cu.yd

Job Name: 26-2038 - Sturgis Municipal Airport-Ph2 Job Location: Sturgis, KY Contractor: M. Bowling, Inc.	Plant: 100 7/31/2026 11:12:13 AM	Tech: Jared - F PC: A. Chambers	

Structure ID: C4 DBI7

P1 BX6072-08W08F-BAVF BOX BASE 8inW, 8inF, Variable Ht T/n

P3) 36" x 36" - P.I.P. - BY OTHERS - 8"	0 lb
P2) 60" x 72" - BOX RISER 8inW, Variable Ht F/G - 55"	10876 lb
P1) 60" x 72" - BOX BASE 8inW, 8inF, Variable Ht T/n - 82"	15713 lb
1) CASTING - HOE KY-328 SET (DBI 7)	328 lb
2) 60" x 72" - Conseal CS-102 1.00"	0 lb
1) Hole - 62	0 lb
1) Hole - 40	0 lb
1) Hole - 54	0 lb
1) Hole - 10	0 lb
Structure Total:	26917 lb

Structure Notes: .
1. KYTC DBI TYPE 7 / PER ASTM C913 SPEC'S.
2. CONCRETE = 4,000 PSI AT 28 DAYS.
3. STUB #5 BARS 20" OUT TOP OF WALLS (SPA@12"C/C)
4. CASTING SUPPLIED BY ICAST (HOE KY-328 SET (DBI 7)).
.
REINFORCING PER ASTM A615 (GRADE 60).
- WALLS (As .31) #5 BARS AT 12" C.C.E.W..
- FLOOR (As .31) #5 BARS AT 12" C.C.E.W.

Rim: 368.36' Rim to Invert: 11.55' Slack: 0.6" Sump: 7" Step Position:

Position	Elev	Angle	Ext. (cw)	Pipe	Pipe OD	Connector	Hole	Horz Size	Up (_)	Offset
Invert 1	356.81'	60°	39.375"	48" RCP B WALL	58"	Hole 62	62"	71.591"	0"	15"
Invert 2	358.7'	315°	29.375"	30" RCP B WALL	37"	Hole 40	40"	56.569"	24.625"	25"
Invert 3	357.01'	270°	44"	42" RCP B WALL	51"	Hole 54	54"	54"	3.375"	0"
Invert 4										
Invert 5										
Invert 6										
Invert 7										
Invert 8										

RIGHT-SIDE UP VIEW (int. dimensions) UPSIDE-DOWN VIEW (int. dimenions)

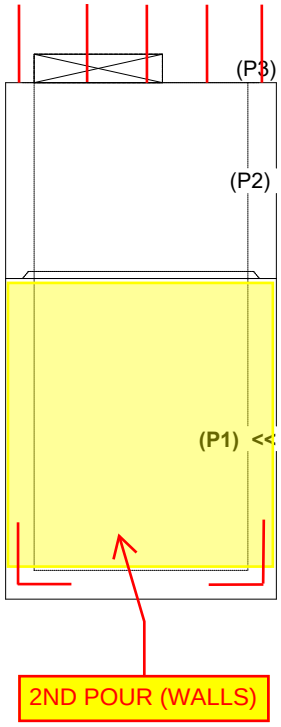

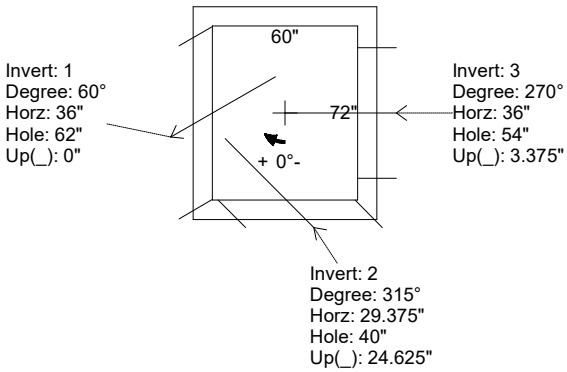

WEIGHTS
FIRST POUR - 4,489 LBS
SECOND POUR - 11,224 LBS
TOTAL - 15,713 LBS

INSIDE WALL DIMENSIONS

(P1)

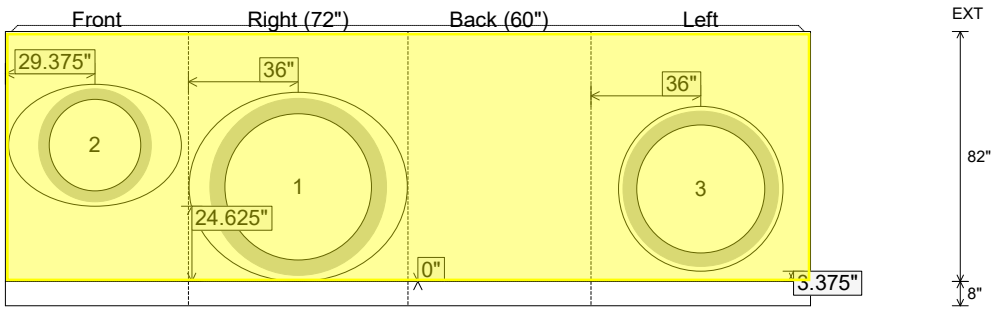

Coating (Int): Coating (Ext):	Seam Up: Tongue Seam Dn: n/a	Wall Thickness: 8" Floor Height: 8"	Height (Int): 82" Height (Ext): 90"	Weight (Net): 15713 lb Volume (Net): 4.01cu.yd

Job Name: 26-2038 - Sturgis Municipal Airport-Ph2 Job Location: Sturgis, KY Contractor: M. Bowling, Inc.	Plant: 100 7/31/2026 11:12:12 AM	Tech: Jared - F PC: A. Chambers	

Structure ID: C3 DBI7

P1 BX3654-08BAVF BOX BASE 8inW, 8inF, Variable Ht T/n

P3) 36" x 36" - P.I.P. - BY OTHERS - 8"	0 lb
P2) 36" x 54" - BOX RISER 8inW, Variable Ht F/G - 50"	7055 lb
P1) 36" x 54" - BOX BASE 8inW, 8inF, Variable Ht T/n - 70"	10099 lb
1) CASTING - HOE KY-328 SET (DBI 7)	328 lb
2) 36" x 54" - Conseal CS-102 1.00"	0 lb
2) Hole - 54	0 lb
1) Hole - 10	0 lb
Structure Total:	17482 lb

Structure Notes: .
1. KYTC DBI TYPE 7 / PER ASTM C913 SPEC'S.
2. CONCRETE = 4,000 PSI AT 28 DAYS.
3. STUB #5 BARS 20" OUT TOP OF WALLS (SPA@12"C/C)
4. CASTING SUPPLIED BY ICAST (HOE KY-328 SET (DBI 7)).
.
REINFORCING PER ASTM A615 (GRADE 60).
- WALLS (As .31) #5 BARS AT 12" C.C.E.W..
- FLOOR (As .31) #5 BARS AT 12" C.C.E.W.

Rim: 367.96' Rim to Invert: 10.2' Slack: 0.4" Sump: 6" Step Position:

Position	Elev	Angle	Ext. (cw)	Pipe	Pipe OD	Connector	Hole	Horz Size	Up (_)	Offset
Invert 1	357.76'	90°	35"	42" RCP B WALL	51"	Hole 54	54"	54"	0"	0"
Invert 2	357.96'	270°	35"	42" RCP B WALL	51"	Hole 54	54"	54"	2.375"	0"
Invert 3										
Invert 4										
Invert 5										
Invert 6										
Invert 7										
Invert 8										

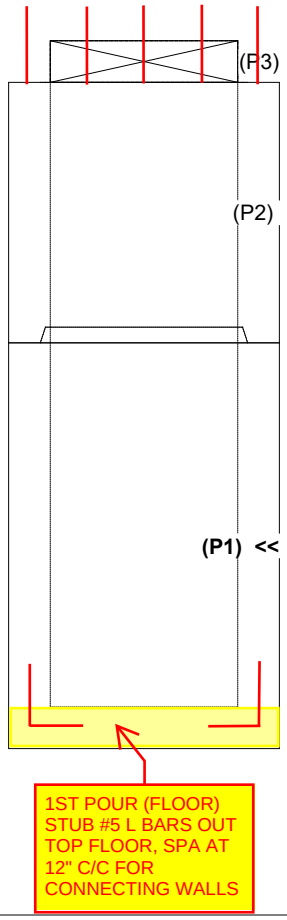

RIGHT-SIDE UP VIEW (int. dimensions)

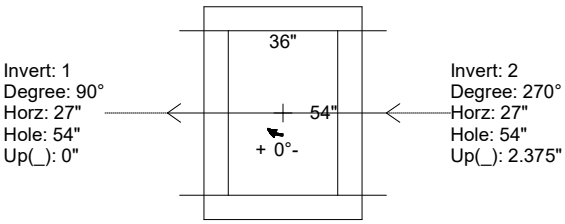

UPSIDE-DOWN VIEW (int. dimenions)

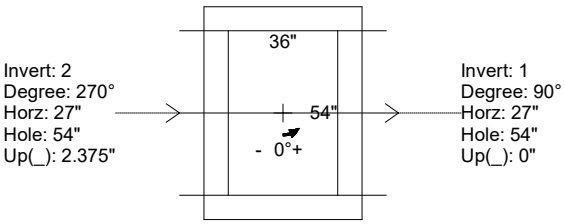

WEIGHTS
FIRST POUR - 2,443 LBS
SECOND POUR - 7,656 LBS
TOTAL - 10,099 LBS

INSIDE WALL DIMENSIONS

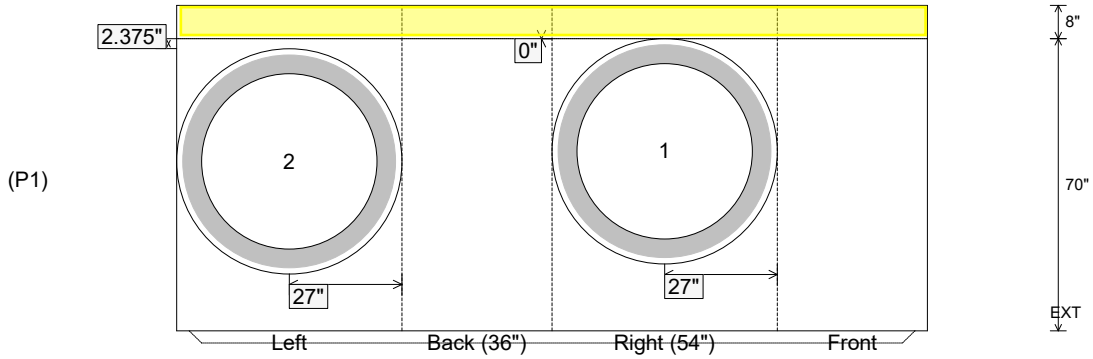

Coating (Int): Coating (Ext):	Seam Up: Tongue Seam Dn: n/a	Wall Thickness: 8" Floor Height: 8"	Height (Int): 70" Height (Ext): 78"	Weight (Net): 10099 lb Volume (Net): 2.58cu.yd

Job Name: 26-2038 - Sturgis Municipal Airport-Ph2 Job Location: Sturgis, KY Contractor: M. Bowling, Inc.	Plant: 100 7/31/2026 11:12:12 AM	Tech: Jared - F PC: A. Chambers	

Structure ID: C3 DBI7

P1 BX3654-08BAVF BOX BASE 8inW, 8inF, Variable Ht T/n

P3) 36" x 36" - P.I.P. - BY OTHERS - 8"	0 lb
P2) 36" x 54" - BOX RISER 8inW, Variable Ht F/G - 50"	7055 lb
P1) 36" x 54" - BOX BASE 8inW, 8inF, Variable Ht T/n - 70"	10099 lb
1) CASTING - HOE KY-328 SET (DBI 7)	328 lb
2) 36" x 54" - Conseal CS-102 1.00"	0 lb
2) Hole - 54	0 lb
1) Hole - 10	0 lb

Structure Total:	17482 lb

Structure Notes: .
1. KYTC DBI TYPE 7 / PER ASTM C913 SPEC'S.
2. CONCRETE = 4,000 PSI AT 28 DAYS.
3. STUB #5 BARS 20" OUT TOP OF WALLS (SPA@12"C/C)
4. CASTING SUPPLIED BY ICAST (HOE KY-328 SET (DBI 7)).
.
REINFORCING PER ASTM A615 (GRADE 60).
- WALLS (As .31) #5 BARS AT 12" C.C.E.W..
- FLOOR (As .31) #5 BARS AT 12" C.C.E.W.

Rim: 367.96' Rim to Invert: 10.2' Slack: 0.4" Sump: 6" Step Position:

Position	Elev	Angle	Ext. (cw)	Pipe	Pipe OD	Connector	Hole	Horz Size	Up (_)	Offset
Invert 1	357.76'	90°	35"	42" RCP B WALL	51"	Hole 54	54"	54"	0"	0"
Invert 2	357.96'	270°	35"	42" RCP B WALL	51"	Hole 54	54"	54"	2.375"	0"
Invert 3										
Invert 4										
Invert 5										
Invert 6										
Invert 7										
Invert 8										

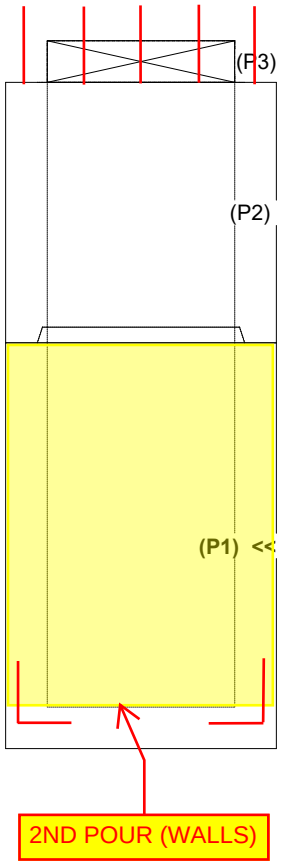

RIGHT-SIDE UP VIEW (int. dimensions)

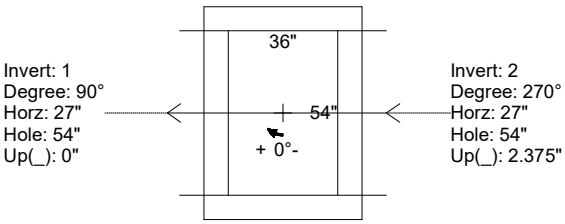

UPSIDE-DOWN VIEW (int. dimenions)

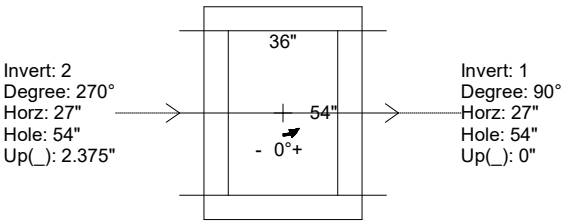

WEIGHTS
FIRST POUR - 2,443 LBS
SECOND POUR - 7,656 LBS
TOTAL - 10,099 LBS

INSIDE WALL DIMENSIONS

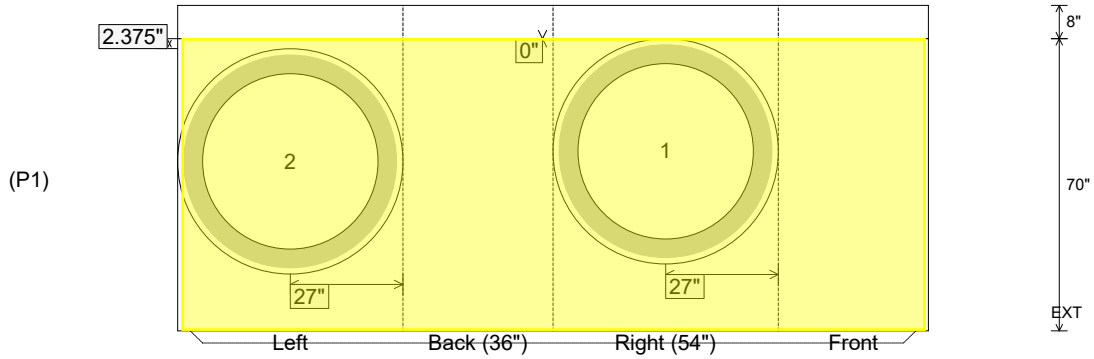

Coating (Int): Coating (Ext):	Seam Up: Tongue Seam Dn: n/a	Wall Thickness: 8" Floor Height: 8"	Height (Int): 70" Height (Ext): 78"	Weight (Net): 10099 lb Volume (Net): 2.58cu.yd

Job Name: 26-2038 - Sturgis Municipal Airport-Ph2 Job Location: Sturgis, KY Contractor: M. Bowling, Inc.	Plant: 100 7/31/2026 11:12:11 AM	Tech: Jared - F PC: A. Chambers	

Structure ID: C2 DBI7

P1 BX3654-08BAVF BOX BASE 8inW, 8inF, Variable Ht T/n

P3) 36" x 36" - P.I.P. - BY OTHERS - 8"	0 lb
P2) 36" x 54" - BOX RISER 8inW, Variable Ht F/G - 42"	5916 lb
P1) 36" x 54" - BOX BASE 8inW, 8inF, Variable Ht T/n - 70"	10038 lb
1) CASTING - HOE KY-328 SET (DBI 7)	328 lb
2) 36" x 54" - Conseal CS-102 1.00"	0 lb
1) Hole - 54	0 lb
1) Hole - 48	0 lb
1) Hole - 10	0 lb
Structure Total:	16282 lb

Structure Notes: .
1. KYTC DBI TYPE 7 / PER ASTM C913 SPEC'S.
2. CONCRETE = 4,000 PSI AT 28 DAYS.
3. STUB #5 BARS 20" OUT TOP OF WALLS (SPA@12"C/C)
4. CASTING SUPPLIED BY ICAST (HOE KY-328 SET (DBI 7)).
.
REINFORCING PER ASTM A615 (GRADE 60).
- WALLS (As .31) #5 BARS AT 12" C.C.E.W..
- FLOOR (As .31) #5 BARS AT 12" C.C.E.W.

Rim: 368.27' Rim to Invert: 9.56' Slack: 0.72" Sump: 6" Step Position:

Position	Elev	Angle	Ext. (cw)	Pipe	Pipe OD	Connector	Hole	Horz Size	Up (_)	Offset
Invert 1	358.71'	90°	35"	42" RCP B WALL	51"	Hole 54	54"	54"	0"	0"
Invert 2	358.91'	270°	35"	36" RCP B WALL	44"	Hole 48	48"	48"	2.375"	0"
Invert 3										
Invert 4										
Invert 5										
Invert 6										
Invert 7										
Invert 8										

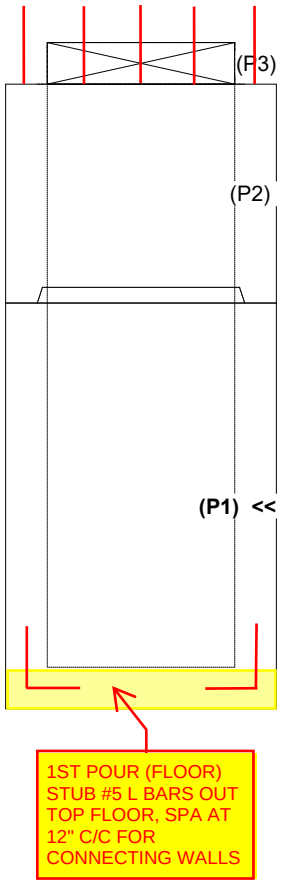

RIGHT-SIDE UP VIEW (int. dimensions)

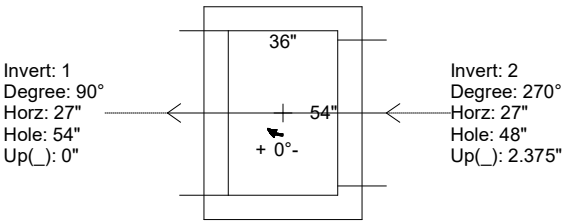

UPSIDE-DOWN VIEW (int. dimenions)

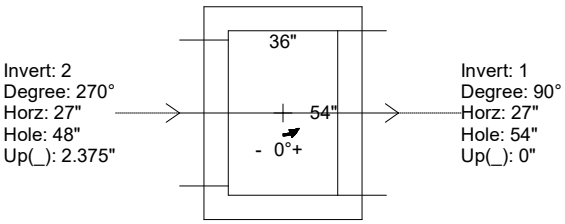

WEIGHTS
FIRST POUR - 2,443 LBS
SECOND POUR - 7,595 LBS
TOTAL - 10,038 LBS

INSIDE WALL DIMENSIONS

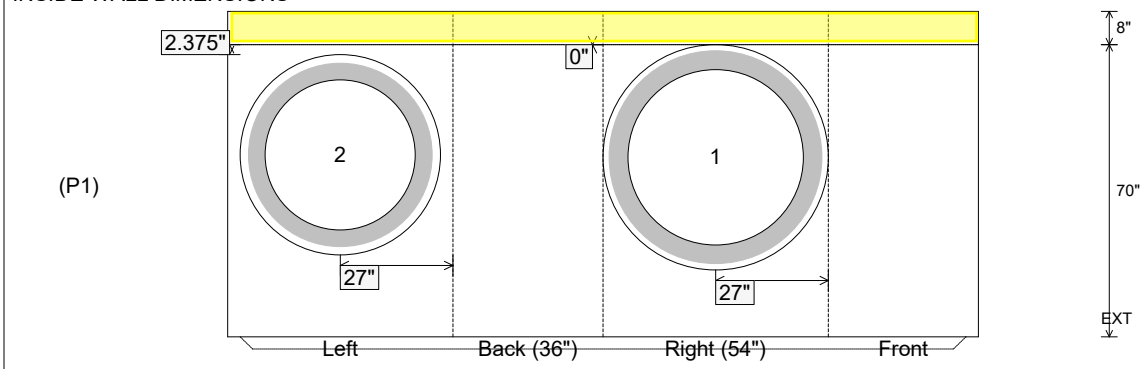

Coating (Int): Coating (Ext):	Seam Up: Tongue Seam Dn: n/a	Wall Thickness: 8" Floor Height: 8"	Height (Int): 70" Height (Ext): 78"	Weight (Net): 10038 lb Volume (Net): 2.56cu.yd

Job Name: 26-2038 - Sturgis Municipal Airport-Ph2 Job Location: Sturgis, KY Contractor: M. Bowling, Inc.	Plant: 100 7/31/2026 11:12:11 AM	Tech: Jared - F PC: A. Chambers	

Structure ID: C2 DBI7

P1 BX3654-08BAVF BOX BASE 8inW, 8inF, Variable Ht T/n

P3) 36" x 36" - P.I.P. - BY OTHERS - 8"	0 lb
P2) 36" x 54" - BOX RISER 8inW, Variable Ht F/G - 42"	5916 lb
P1) 36" x 54" - BOX BASE 8inW, 8inF, Variable Ht T/n - 70"	10038 lb
1) CASTING - HOE KY-328 SET (DBI 7)	328 lb
2) 36" x 54" - Conseal CS-102 1.00"	0 lb
1) Hole - 54	0 lb
1) Hole - 48	0 lb
1) Hole - 10	0 lb
Structure Total:	16282 lb

Structure Notes: .
1. KYTC DBI TYPE 7 / PER ASTM C913 SPEC'S.
2. CONCRETE = 4,000 PSI AT 28 DAYS.
3. STUB #5 BARS 20" OUT TOP OF WALLS (SPA@12"C/C)
4. CASTING SUPPLIED BY ICAST (HOE KY-328 SET (DBI 7)).
.
REINFORCING PER ASTM A615 (GRADE 60).
- WALLS (As .31) #5 BARS AT 12" C.C.E.W..
- FLOOR (As .31) #5 BARS AT 12" C.C.E.W.

Rim: 368.27' Rim to Invert: 9.56' Slack: 0.72" Sump: 6" Step Position:

Position	Elev	Angle	Ext. (cw)	Pipe	Pipe OD	Connector	Hole	Horz Size	Up (_)	Offset
Invert 1	358.71'	90°	35"	42" RCP B WALL	51"	Hole 54	54"	54"	0"	0"
Invert 2	358.91'	270°	35"	36" RCP B WALL	44"	Hole 48	48"	48"	2.375"	0"
Invert 3										
Invert 4										
Invert 5										
Invert 6										
Invert 7										
Invert 8										

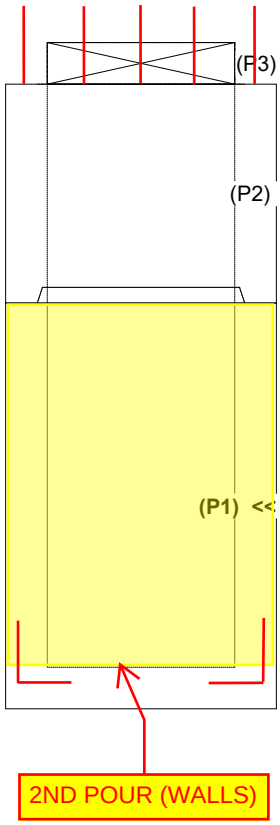

RIGHT-SIDE UP VIEW (int. dimensions)

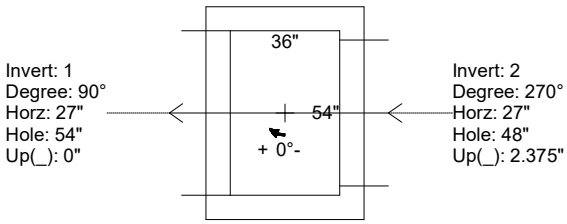

UPSIDE-DOWN VIEW (int. dimenions)

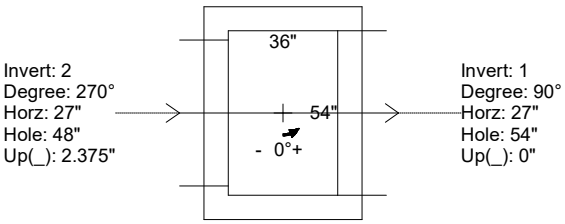

WEIGHTS
FIRST POUR - 2,443 LBS
SECOND POUR - 7,595 LBS
TOTAL - 10,038 LBS

INSIDE WALL DIMENSIONS

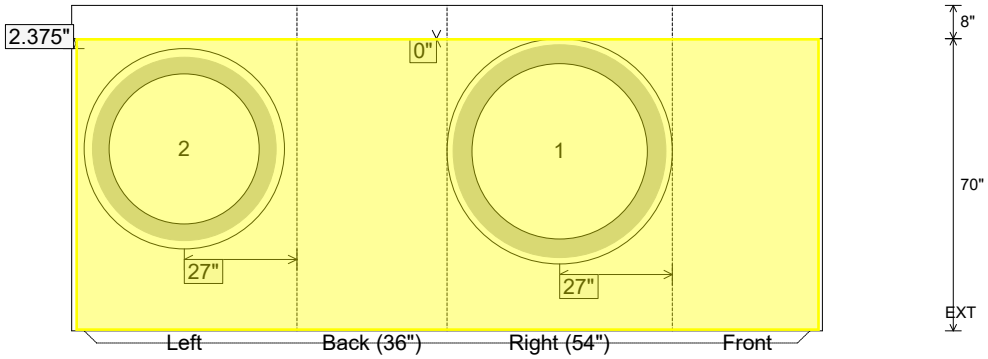

Coating (Int): Coating (Ext):	Seam Up: Tongue Seam Dn: n/a	Wall Thickness: 8" Floor Height: 8"	Height (Int): 70" Height (Ext): 78"	Weight (Net): 10038 lb Volume (Net): 2.56cu.yd

Job Name: 26-1787 - Kroger Expansion Job Location: Murray, KY Contractor: Parker Excavating, LLC.	Plant: 100 7/22/2026 3:26:57 PM	Tech: J. Horsley PC: J. Jarvis	

Structure ID: D1 ST-IN

P2 BX024048-08LD08S **BX FLAT LID 8inW SPEC. (JBS-3061) F/F**

P3) 24" x 48" - CASTING HEIGHT - 0"	0 lb
P2) 24" x 48" - BX FLAT LID 8inW SPEC. (JBS-3061) F/F - 8"	945 lb
P1) 24" x 48" - BOX BASE 8inW, 8inF, Variable Ht F/n - 50"	7194 lb
1) SECONDARY POUR	0 lb
1) CASTING - JBS 3061 F/G	250 lb
1) 24" x 48" - Conseal CS-102 1.00"	0 lb
1) Hole - 30	0 lb
4) Hole - 6	0 lb
Structure Total:	8389 lb

Structure Notes: .
1. PER ASTM C913 SPECIFICATIONS.
2. CONCRETE = 4,000 PSI AT 28 DAYS.
3. CASTING BY ICAST (JBS 3061 F/G CAST FLUSH).

.
REINFORCING PER ASTM A615 (GRADE 60).
- TOP SLAB (As .62) #5 BARS AT 6" C.C.E.W.
- WALLS (As .31) #5 BARS AT 12" C.C.E.W.
- FLOOR (As .31) #5 BARS AT 12" C.C.E.W.

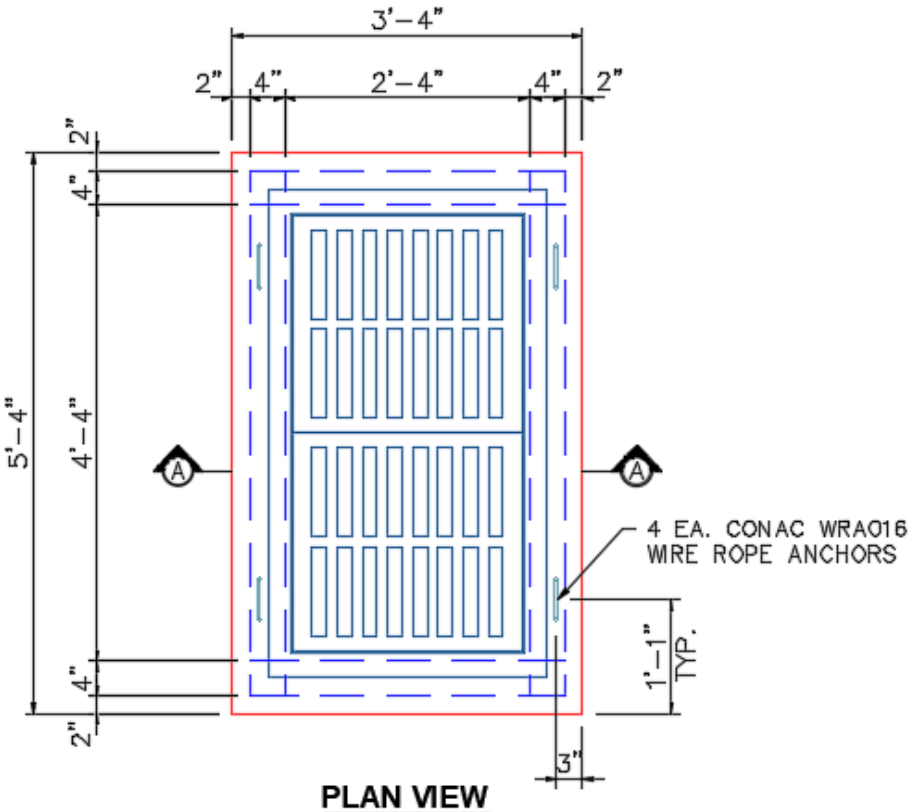

PLAN VIEW

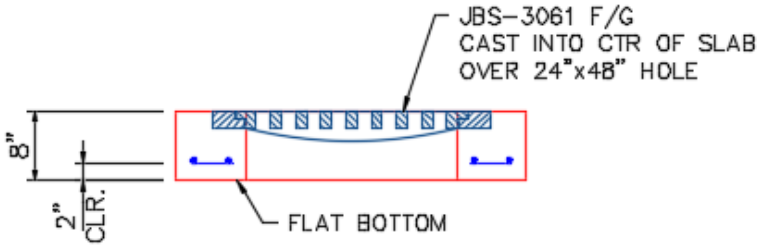

SECTION A-A

#5 BAR CUT LIST
2 EA. @ 60" LG.
2 EA. @ 36" LG

Coating (Int): Coating (Ext):	Seam Up: Flat Seam Dn: Flat	Wall Thickness: 8"	Height (Ext): 8"	Weight (Net): 945 lb Volume (Net): 0.24cu.yd

Job Name: 25-2952 - KYTC Jefferson Co Call 106 (251315) Job Location: Indiana, KY Contractor: Louisville Paving and Construction	Plant: 100 6/12/2026 3:12:27 PM	Tech: J. Horsley - A PC: J. Jarvis	

Structure ID: 63

P2 BX024024-08LD08-14 CB FLAT TOP 8"W (HOE KY-210) F/F

P3) 19.5" - CASTING (cast in) - 2.75"	0 lb
P2) 24" x 24" - CB FLAT TOP 8"W (HOE KY-210) F/F - 8"	943 lb
P1) 24" x 24" - BOX BASE 8inW, 8inF, Variable Ht F/n - 28"	3309 lb
1) This Structure Includes a Cast-in Item - HOE KY-210 Frame (Supplied By Others)	0 lb
1) 24" x 24" - Conseal CS-102 1.00"	0 lb
1) Hole - 18	0 lb
Structure Total:	4252 lb

Structure Notes:

** KYTC STATE PROJECT **

1. PER KYTC DBI TYPE 14 / ASTM C-913 SPECS
2. CONCRETE: 4,000 PSI AT 28 DAYS
3. REINFORCEMENT: #5 BAR @ 6" C.C. E.W. (GRADE 60) - 2" MIN. REBAR CLEARANCE (TYP)
4. HOE KY-210 FRAME & GRATE SUPPLIED BY OTHERS - FRAME TO BE CAST INTO FLAT LID
5. LIFTERS: 2 EA. 5CA14 CONAC A-ANCHORS FOR PLANT & FIELD HANDLING - INSTALLED AS SHOWN
6. TOP SURFACE TO RECEIVE LIGHT BRUSH FINISH

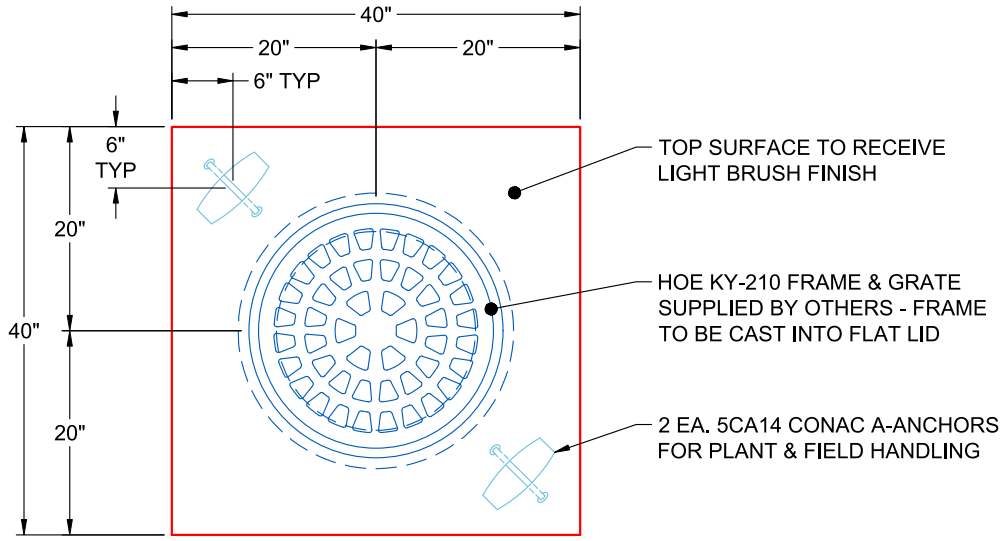

PLAN VIEW
(RIGHT SIDE UP)

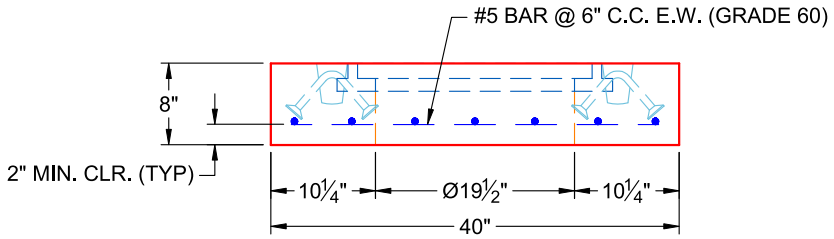

FRONT VIEW
(RIGHT SIDE UP)

Coating (Int): Coating (Ext):	Seam Up: Flat Seam Dn: Flat	Wall Thickness: 8"	Height (Ext): 8"	Weight (Net): 943 lb Volume (Net): 0.24cu.yd

Job Number:

25-2952

Job Name:

KYTC Jefferson Co Call 106 (251315)

Structure:

63

Note:

HOE KY-210 Frame Supplied By Others To Be Cast Into Flat Lid

Job Name: 25-4665 - Buckhorn WTP Job Location: Hazard, KY Contractor: Smith Contractors, Inc.	Plant: 100 4/7/2026 3:51:36 PM	Tech: J. Horsley PC: E. Bradley	

Structure ID: SV (5)

P2 BX108108-08W-RSVF BOX RISER 8inW, Variable Ht T/F

P5) 66" x 64" - HATCH (CAST FLUSH) - 3"	0 lb
P4) 108" x 108" - BX FLAT TOP 8"W w/66"x64" HATCH F/F - 10"	9582 lb
P3) 108" x 108" - BOX RISER 8inW, Variable Ht F/G - 88"	27410 lb
P2) 108" x 108" - BOX RISER 8inW, Variable Ht T/F - 70"	21433 lb
P1) 108" x 108" - P.I.P. BY OTHERS - BTM SLAB F/n - 0"	0 lb
1) JOINT WRAP - 0.065"x6"x50' CONSEAL CS212	0 lb
1) JOINT WRAP PRIMER - CONSEAL CS-75 (1 gal.)	0 lb
1) This Structure Includes a Cast-in Item - Hatch (Supplied by Others)	0 lb
3) 108" x 108" - Conseal CS-102 1.00" (Double)	0 lb
2) A-Lok - 0570	2 lb
Structure Total:	58427 lb

Structure Notes:
1. PER ASTM C-913 SPECIFICATIONS
2. CONCRETE: 4,500 PSI AT 28 DAYS
3. REINFORCEMENT: #5 BAR @ 8" C.C. E.W. (GRADE 60) - 2" MIN. REBAR CLEARANCE (TYP)
4. NO STEPS
5. HALLIDAY W2R 66" X 64" HATCH SUPPLIED BY OTHERS - TO BE CAST INTO FLAT LID
6. LADDER SUPPLIED BY OTHERS

Rim: 762' Rim to Invert: 12' Slack: 0" Sump: 24" Step Position:

Position	Elev	Angle	Ext. (cw)	Pipe	Pipe OD	Connector	Hole	Horz Size	Up (_)	Offset
Invert 1	750'	90°	55"	16" DI	17.5"	A-Lok 0570	18.75"	18.75"	22.625"	-7"
Invert 2	750'	270°	69"	16" DI	17.5"	A-Lok 0570	18.75"	18.75"	22.625"	7"
Invert 3										
Invert 4										
Invert 5										
Invert 6										
Invert 7										
Invert 8										

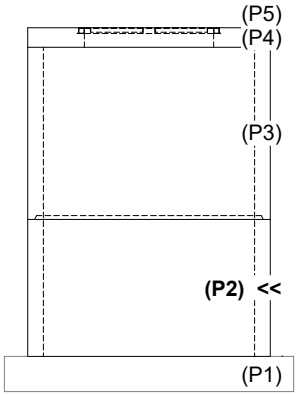

RIGHT-SIDE UP VIEW (int. dimensions)

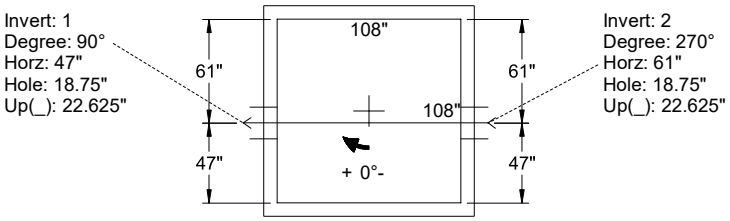

INSIDE WALL DIMENSIONS

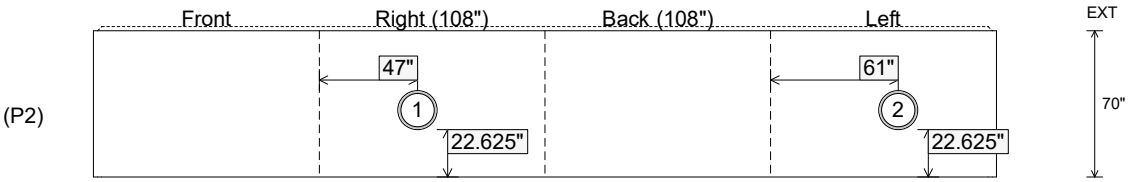

Coating (Int): Coating (Ext):	Seam Up: Tongue Seam Dn: Flat	Wall Thickness: 8" Floor Height: 0"	Height (Int): 70" Height (Ext): 70"	Weight (Net): 21433 lb Volume (Net): 5.48cu.yd