Job Name: 26-1645 East Bank Regional ARV's Job Location: Nashville, TN Contractor: Garney Companies, Inc.	Plant: Beaver Dam 6/26/2026 12:31:57 PM	Tech: S. Felletter PC: J. Jarvis	

Structure ID: 3 - ARV FOOTER 18" x 18" X 4"

P15 BLKCSTM **FOOTING SLAB 18"x18"x4" - 4" - 18" x 18"**

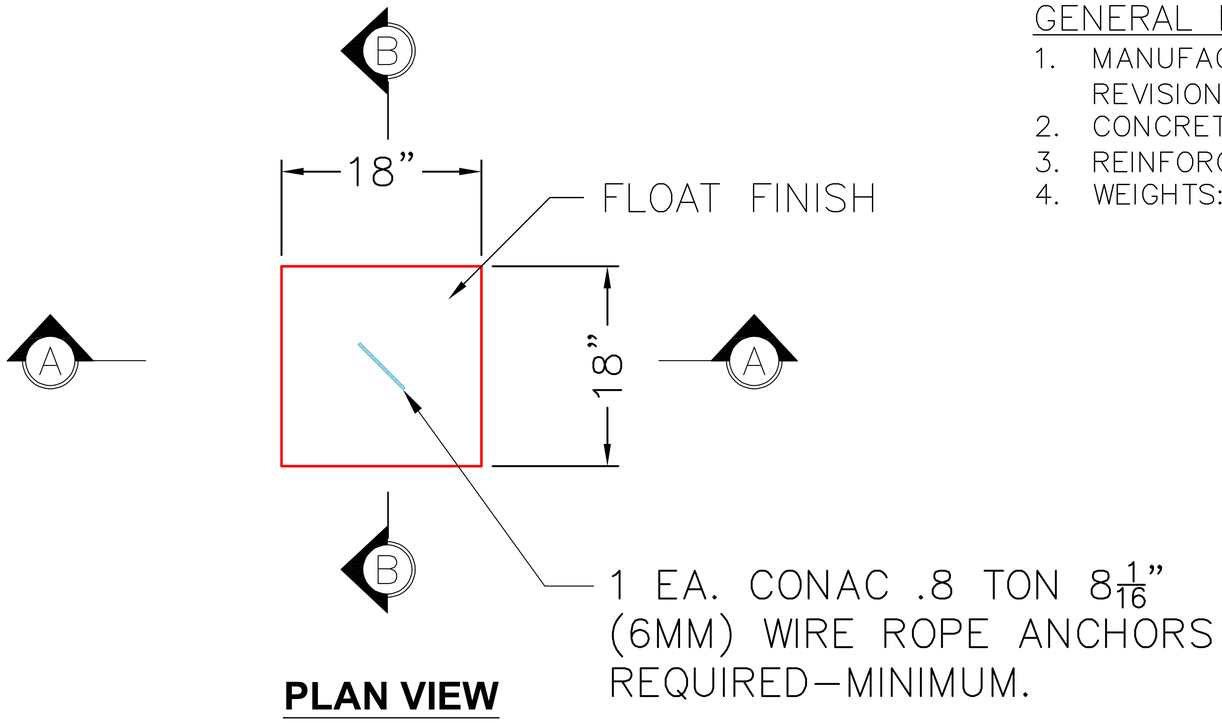

PLAN VIEW

GENERAL NOTES:

1. MANUFACTURED TO ASTM C–913 (LATEST REVISION).
2. CONCRETE: 5,000 PSI AT 28 DAYS.
3. REINFORCING: AS SHOWN BELOW(GRADE 60).
4. WEIGHTS: 113 LBS. EACH

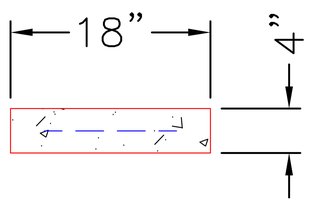

SECTION A-A

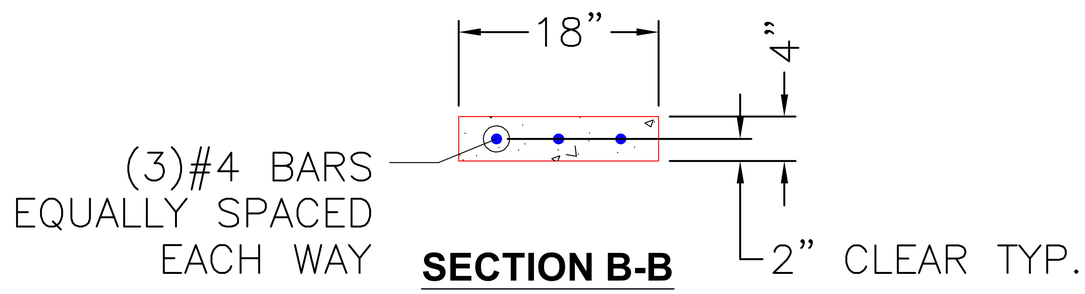

SECTION B-B

PRODUCTION WORK ORDER	PRODUCT I.D.: BLKCSTM	DESCRIPTION: FOOTING SLAB 18" X 18" X 4"	
QUALITY CONTROL CHECKLIST	PRODUCT VIEW: RIGHT SIDE UP	CUSTOMER: GARNEY COMPANIES INC	
☐ ALL DIMENSIONS CORRECT.	PLANT: BEAVER DAM, KY.	PROJECT: EAST BANK REGIONAL ARV'S	
☐ LIFTERS INSTALLED.	WEIGHT: 113 LBS.	STRUCTURE: ARV FOOTER	
☐ HATCH CORRECT LOCATION.	TOP SECTION JOINT: N/A	ORDER NO: 26–2640	
☐ REINFORCING CORRECT.	BASE SECTION JOINT: N/A	PC: T. RYAN	DRAWING: S. FELLETTER
☐ SURFACE QUALITY ACCEPTABLE.	QC CHECK INITIALS:	DATE: 06/25/26	SCALE: NTS / PG. 1 of 1
☐ EDGES CHAMFERED.			
☐ ALL PATCHWORK ACCEPTABLE.			

THIS DRAWING IS THE PROPERTY OF INFRASTRUCTURE PRECAST, INC. ANY USE OR DUPLICATION OF THIS DRAWING WITHOUT PRIOR AUTHORIZATION IS STRICTLY PROHIBITED.